Indian Journal of Energy and Energy Resources (IJEER)
ISSN: 2583-1186 (Online), Volume-1 Issue-3, May 2022

Driver's Activity Detection System using Humanantenna

Sachin Paliwal, Birinderjit Singh Kalyan

Abstract: ***Now a days we can see that there are many cases which are occurring due to the drowsiness of drivers and that has become a main problem of the automotive industry. To overcome this in automotive industry the introduction of new technologies that is by introducing of new sensor which can detect the different activities. Detection of activities by sensors is for biological measuring such as heartbeat, oxygen level, respiration activity, etc. By applying such widespread variety of sensor usage in the system has a very high implementation cost and also very complexity which is a bit challenging design. In this paper, we are going study that how humantenna effect is used to detect and test the drive drowsiness by using simple and budget sensors in automotive industry.***

Keywords**: *Automotive Safety, Drowsiness Detection, Human Touch Sensor, Driver's activity detection, Humanantenna.***

I. INTRODUCTION

Lazy driving can be one of the very dangerous pattern of driving and this can be considered as permanent reason of death and damages. When the survey of road user's was done in Europe then it was concluded that main cause of accident was due to the suffering of drowsiness of driver and the rate of accidents due to driver drowsiness was about 36%. So after such surveys automotive industry started paying their attention towards the best safety features with high equip vehicles. These features are introduce for various reasons such as avoidance of collision, warning from the pedestrian, detecting the changing of lane, getting feedback from driver, etc. By getting advance in sensor technology the use camera sensors and depth based sensor at back side of vehicle helps the driver by alerting them from danger of collapsing of a vehicle at any point. However once the sensor gets installed in the system but after the installation they are many challenges which can affect the functionality of the system. As an example the variations can be seen in camera sensor where camera lens get affected by the light and due to which image capture by the camera sensor has variation in background and color and big computation cost is required to process the massive image. On the other hand depth based sensor has difficulty in recognizing the shape and orientation. Nowadays, the automotive industry tries to minimize the car accidents by integrating biosensors such as heart and respiration in-car embedded nonintrusive sensors [5], and automotive Guttersberg sensors [6] shown in Fig. 1. The heart and respiration in-car embedded nonintrusive sensors (HARKEN) are based on the detection of cardiac and respiratory rhythms through embedded sensors in driver's seat and seat belt [15]. In Guttersberg sensor [6], the detection of the drowsiness is done with the help of two different sensor that helps in measurement of total bending. They sensor are flexible sensor or bent sensor. The work of these sensor is temperature dependent. Hence, these sensor helps in calculate the resistance value of a steering wheel. Now for the driver alcohol detection system, a good step is taken as for this measurement a touch sensing system is introduce which is helping in to known the level alcohol concentration in blood. As its operation principle is very simple which include the use of the spectroscopy. The process in include when driver touches the system then by the tissues of hand it detect the alcohol concentration but it take 2 long hours for detecting. This paper is going to present the total effective cost of touch *sensor* which is integrated in surface of the steering wheel and this touch sensor is working purely on humantenna operation principle [8] which helps in detecting the human hand presence while handling the steering wheel.

II. OPERATION PRINCIPLE AND DESIGN

Human body has several types of minerals in it, so it is good in conducting body to be use as an antenna. For proximity in the AC source extremely low frequency magnetic fields are induced. The description of this can be given by the Faraday's law. Idea behind this sensor is for harvesting of the induced voltage, which depends on the grip of driver's hand. However if the grip is loose then the alarms are set which start alerting the driver drowsiness. Figure 2 shows that how does an amplifier with composition of 2 BJTs are helping to produce the required voltage gain which helps in activating the microcontroller.

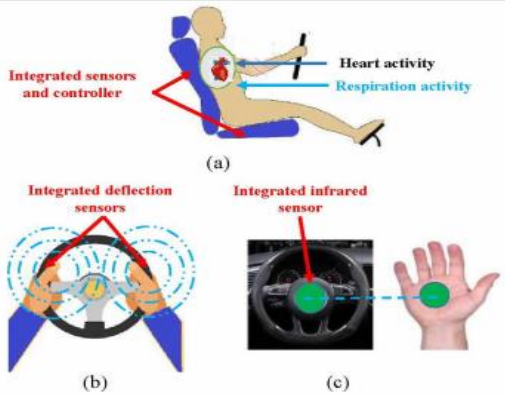

Fig.1.Schematics of Some Automotive Safety

Manuscript received on February 22, 2022.
Revised Manuscript received on February 25, 2022.
Manuscript published on May 30 2022.
* Correspondence Author
Sachin Paliwal*, Department of Electrical Engineering, Chandigarh University, Chandigarh (Punjab), India.
Birinderjit Singh Kalyan, Department of Electrical Engineering, Chandigarh University, Chandigarh (Punjab), India.

© The Authors. Published by Lattice Science Publication (LSP). This is an open access article under the CC BY-NC-ND license (http://creativecommons.org/licenses/by-nc-nd/4.0/)

(a) HARKEN[5]
(b) Guttersberg [6]
(c) DADSS[7]

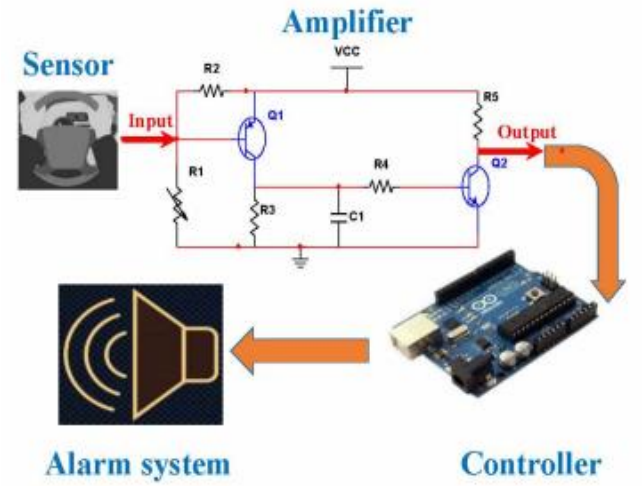

Fig. 2. Schematic of The Proposed Signal Processing Stage

III. REVIEW ON SENSOR WORKING

How the step-up for the experiment is done is shown in figure3. As already said for the touch sensor and its installation. So by the diagram we can see how the wire is rolled around steering wheel through electrode over it. Proximity near driving wheel the alarms system and controller is placed. In the case of loose grip or low touching effect an alarm se set by controller which warns for the driver drowsiness and to identify the hand grip pattern on scale of 0 to 5 several experiment are perform. As 0 represent the loose grip and 5 represent the best grip or tight grip. Figure 4 shows the graph between grip strength and output voltage. By the graph we can clearly make out that by the value of output voltage the grip strength can distinguished easily. Same for the driver drowsiness, if the driver losses control over the wheels then it's because of loose grip which shows the high value of output voltage showing driver drowsiness.

Fig.3.Experimental setup of the proposed System Installed on car

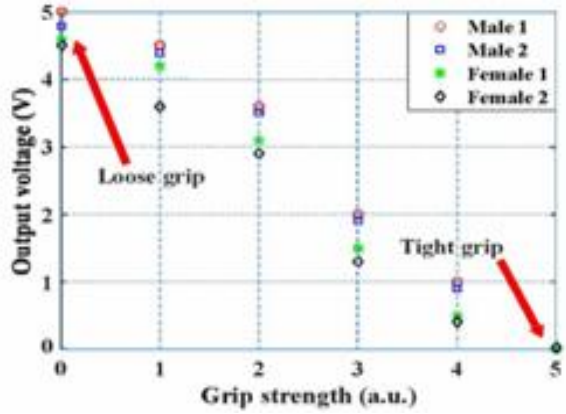

Fig. 4. Induced Voltage from Different Steering Wheel Grip Patterns

IV. CONCLUSION

In this paper we have studied about the sensors and the installation of them is easily done on the specified surface area of steering wheel to get the maximum benefit for them and no need to get any other special arrangements. By help of humantenna effect we have seen that detection of driver drowsiness is done. As by just using the hand grip strength the detection of induced voltage was done and this method proven to be very effective indicator to see the driver drowsiness. To add an addition benefit to its simplicity or cost effectiveness there was no requirement for adding a receiver and transmitter.

REFERENCES

1. A M. Foreman, Y. Hayashi, J.E. Friedel, and O. Wirth, "Social distance and texting while driving: A behavioral economic analysis of social-707, Oct 2019.
2. Goldenb Driver fatigue. ESRA2 Thematic report Nr. 4. ESRA project (E- The Hague, Netherlands Institute for Road safety Research SWOV, 2019.
3. Celaya-Padilla, et. al., "'Tetfmg & Driving" Detection Using Deep Convolutional Neural Networks." Applied Sciences, vol. 9, no. 15, p. 2962, Jan. 2019.
4. Smith, Karly A., et. al., "Gesture recognition using mm-wave sensor for human-car interface." IEEE sensors letters, vol. 2, no. 2, pp. 1-4, Feb. 2018
5. Martinez, H., Sanabhuja, J., and Gameiro, P., "Heart and respiration unobtrusive sensors integrated in the vehicle," HARKEN project, 2013.
6. Fleming, Bill. "Advances in automotive electronics [automotive electronics]." IEEE vehicular technology magazine, vol. 10, no. 4, Dec. 2015.
7. Zaouk, Abdullatif K., et. al., "Driver Alcohol Detection System for Safety (DADSS^A Status Update" Proceedings of the 25th International Technical Conference on the Enhance Safety of Vehicles, Paper Number 17-0271, 2017.
8. Cohn, G.; Morris, D.; Patel, M.; Tan, D. Humantenna: using the body as an antenna for real-time whole-body interaction. In Proceedings of the SIGCHI Conference on Human Factors in Computing Systems (CHI '12). ACM, New York, USA, 2012, pp. 1901-1910.
9. B. C. Towe, "Bioelectricity and its measurement," in Standard handbook of biomedical engineering and design, McGraw-Hill, 2004.
10. Tawseef Ahmad Wani, Birinderjit Singh Kalyan. (2020). Characterization of Junction and Junction-Less NMOS at Various Parametric Changes. International Journal of Advanced Science and Technology, 29(06), 8141-8151.
11. Kalyan, Birinderjit Singh, and Singh Balwinder. "Quantum dot cellular automata (QCA) based 4-bit shift register using efficient JK flip flop." International Journal of Pure and Applied Mathematics 118, no. 19 (2018): 143-157.

Retrieval Number:100.1/ijeer.C1007051322
DOI: 10.54105/ijeer.C1007.051322
Journal Website: www.ijeer.latticescipub.com

Published By:
Lattice Science Publication
© Copyright: All rights reserved.

12. Becker, Jan C., and Andreas Simon. "Sensor and navigation data fusion for an autonomous vehicle." In Proceedings of the IEEE Intelligent Vehicles Symposium 2000 (Cat. No. 00TH8511), pp. 156-161. IEEE, 2000.
13. Fayyad, Jamil, Mohammad A. Jaradat, Dominique Gruyer, and Homayoun Najjaran. "Deep learning sensor fusion for autonomous vehicle perception and localization: A review." Sensors 20, no. 15 (2020): 4220.
14. G. S. Maximous and H. A. Bastawrous, "Driver Drowsiness Detection Based on Humantenna Effect for Automotive Safety Systems," 2020 IEEE 9th Global Conference on Consumer Electronics (GCCE), 2020, pp. 391-392, doi: 10.1109/GCCE50665.2020.9291815.
15. M. M. El-Barbary, G. S. Maximous, S. Tarek and H. A. Bastawrous, "Validation of Driver Drowsiness Detection Based on Humantenna Effect Using Facial Features," 2021 International Conference on Microelectronics (ICM), 2021, pp. 216-219, doi: 10.1109/ICM52667.2021.9664899.

AUTHORS PROFILE

Sachin Paliwal, currently pursuing Master of Technology in Electric Vehicle in Electrical Engineering Department from Chandigarh University, Chandigarh, India. Completed bachelor's degree from SRM University Chennai, Tamil Nadu India in Electrical and Electronics Engineering. Email: sachinpaliwal22@gmail.com

Birinderjit Singh Kalyan, Masters form Punjab University. Research area is QCA circuit design and low power VLSI design. Published more than 30 research paper in reputed journals and conferences**.** Also the member of IEEE. Currently teaching in Chandigarh University Email: birinder.ee@cumail.in

© Copyright: All rights reserved.