A Real-time Explainable-by-design Super-Resolution Model for LiDAR SLAM

Alexandros Gkillas[1,2], Christos Anagnostopoulos[2], Nikos Piperigkos[1,2], Aris S. Lalos[1]
[1]Industrial Systems Institute, Athena Research Center, Patras Science Park, Greece
[2]AviSense.AI, Patras Science Park, Greece
Emails: {gkillas, anagnostopoulos, piperigkos}@avisense.ai, lalos@isi.gr

2024 IEEE 7th International Conference on Industrial Cyber-Physical Systems (ICPS) | 979-8-3503-6301-2/24/$31.00 ©2024 IEEE | DOI: 10.1109/ICPS59941.2024.10640037

***Abstract*—Addressing the prohibitive cost of high-resolution LiDAR sensors, this study introduces a novel LiDAR Super-Resolution method. In a more detailed manner, we will emphasize on three key factors for deploying Super-Resolution algorithms in real-world scenarios: enhanced accuracy, reduced computational complexity, and real-time performance. To this end, a novel optimization problem is proposed to solve the LiDAR Super-Resolution problem. By combining learnable regularizers that utilize the low-rank properties of the LiDAR data and handcrafted regularizers that capture the ring-like structure, an explainable and computationally efficient deep learning architecture is derived using the Deep Unrolling strategy. Extensive numerical results on a real-world autonomous driving dataset demonstrate our model's superiority over existing state-of-the-art methods, especially in practical SLAM applications. Notably, our solution operates at 50-100 fps, significantly improving real-time performance, a key advantage over current methods that do not meet this critical requirement.**

***Index Terms*—lidar super-resolution, SLAM, deep unrolling, explainability, real-time**

I. Introduction

LiDAR technology has become a cornerstone in the development of Connected and Autonomous Vehicles (CAVs), offering revolutionary potential to transform modern transportation systems. Despite its critical role in enhancing vehicle perception capabilities, the widespread adoption of LiDAR technology faces significant challenges. The primary obstacle hindering broader implementation include the high costs associated with advanced sensor equipment, such as high-resolution LiDAR systems in applications like Simultaneous Localization and Mapping (SLAM) and multi-object tracking [1]. For instance, a 64-channel HDL-64E LiDAR, often used in autonomous driving, is priced around $85,000$\$, while a more affordable 16-channel LiDAR sensor costs approximately $4,000$\$. Although the latter offers a cost-effective alternative, its lower resolution may compromise effectiveness in various applications. As the quest for more efficient solutions continues, the focus has shifted to enhancing the capabilities of lower-resolution LiDAR systems [2]. To this end, numerous LiDAR Super-Resolution methodologies has been proposed over the years. Initial works proposed methodologies to enhance quality of the low-resolution LiDAR sensors utilizing additional sensors such as RGB cameras or Inertial Measurement Units (IMUs) [3], [4]. However, the major limitations of the these methods is their increased computational complexity, largely due to the reliance on precise point cloud registration and the dependency on the IMU accuracy [5].

To address the above limitations, the current LiDAR Super-Resolution literature can be divided into two principal groups. The first group aims to solve the Super-Resolution problem directly on the 3D point cloud domain using various deep learning methodologies [5]–[7]. Nevertheless, these methods typically demand significant computational resources for tasks like identifying adjacent points [8] and executing segmentation [6], and they often face complexities arising from the sparsity of data obtained from low-resolution LiDAR sensors.

A different strategy in LiDAR Super-Resolution involves solutions to the range image domain, where 3D point clouds are projected into 2D range images. This data transformation offers a more insightful visualization of the LiDAR data, particularly effective in addressing the sparsity issues of raw 3D point clouds [9]. However, methods utilizing this strategy, such as [10], [11], often rely on complex deep learning models [10], [11] with numerous learnable parameters, leading to a requirement for extensive training data and a lack of interpretability [12], [13]. Moreover, a critical aspect in autonomous driving applications, such as object detection and SLAM, is the necessity for real-time operation. Due to their high computational complexity and the additional need for post-processing to eliminate outliers [10], these deep learning methods often fail to reach a satisfactory frame rate (fps). This limitation significantly impacts their practicality in scenarios where efficient and rapid processing is crucial.

Addressing the computational and real-time constraints in existing literature, our study introduces a novel optimization-based deep learning architecture, utilizing the advantages of the range view domain. By transforming 3D point clouds into 2D range images, we exploit the mathematical connection between low and high-resolution images. This forms the basis for a new optimization problem that combines learnable and handcrafted regularizers to fully capture the inherent structure of the LiDAR data, i.e., the low-rank properties due to the strong correlations among neighboring points and the ring-like structure. To capitalize on the low-rank properties of LiDAR

The research project is is supported by the EU's H2020 research and innovation programme TRUSTEE under grant agreement No 101070214 and by the framework of H.F.R.I call "Basic research Financing (Horizontal support of all Sciences)" under the National Recovery and Resilience Plan "Greece 2.0" funded by the European Union – NextGenerationEU (H.F.R.I. Project Number: 16469).

Authorized licensed use limited to: University of Patras. Downloaded on January 13,2025 at 11:46:23 UTC from IEEE Xplore. Restrictions apply.

data, we introduce a learnable regularizer in the form of an autoencoder-based neural network. This network is designed to capture and utilize the low-dimensional representation of the input data, thus offering enhanced performance with lower computational demands, and making it ideal for real-time applications. Moreover, considering that each row of the range image corresponds to a different laser channel, and points within the same row belong to the same ring of the point cloud, we propose a handcrafted regularizer that penalizes large values on the horizontal gradient of the range-image. This regularizer is specifically designed to enforce the ring-like structure within the solutions of our optimization problem, which can be replaced by learnable horizontal kernels that perform circular convolution.

An efficient iterative solver, based on gradient descent algorithm, is derived to tackle the proposed optimization problem, by creating a model-based deep learning structure through the Deep Unrolling (DU) framework [14]–[16]. This solver is unrolled over a set number of iterations, in order to design a structured neural network where each layer represents a single iteration of the algorithm. The developed Deep Unrolling methodology not only achieves increased explainability but also features a compact structure. From a broader point of view, our study differentiates itself from other works in the literature, including those proposing optimization problems [17] (see also Section II for details), by noting the critical role that LiDAR data properties play in achieving state-of-the-art and real-time performance.

The main contributions could be summarized as follows:

- By combining handcrafted and learnable regularizers that utilize the ring-like structure and low-rank properties of the LiDAR data, a highly explainable and light weighted Deep Unrolling model is proposed which significantly improves the quality of low resolution LiDAR sensors.
- To fully evaluate the performance of the proposed Deep Unrolling model, we consider the real-world application of LiDAR-SLAM, where the need for real-time performance is of paramount importance. The developed model is integrated within the LeGO-LOAM [18] approach. The reconstructed LiDAR data with our approach is shown to improve SLAM accuracy in various trajectories, achieving at the same time much greater accuracy over other methods. This emphasizes the effectiveness of our solution in practical SLAM applications, notably achieving operational speeds of 50-100 fps, which significantly outperform other existing and computationally expensive techniques.

II. Preliminaries - LiDAR Super-resolution Problem

Given a high-resolution 64-channel LiDAR sensor and the corresponding 3D high-resolution point cloud $P(X)$, we can generate a high-resolution range image $\boldsymbol{X} \in \mathbb{R}^{N \times M}$, where N denotes the vertical resolution of the range image i.e., the number of channels and M is the horizontal dimension of the range image. Interestingly, a mathematical connection can be derived between a low-resolution LiDAR sensor (like a 16-channel sensor) and the aforementioned high-resolution 64-channel LiDAR sensor in the context of the range image domain. This relationship is based on the following degradation formula

$$\boldsymbol{Y} = \boldsymbol{H}\boldsymbol{X} + \boldsymbol{W} \tag{1}$$

where where $\boldsymbol{H} \in \mathbb{R}^{n \times N}$ denotes the downsampling operator that selects only the c channels from the high resolution range image and W is a zero-mean Gaussian noise term. Thus, the derived low-resolution range image $Y \in \mathbb{R}^{n \times M}$ has the same horizontal resolution as X but only $c < C$ channels in the vertical resolution (e.g., $c = 16$).

Given that a vehicle is equipped with a low-resolution LiDAR sensor, and the aim is to improve the resolution of its range image, a simple optimization problem is formulated similar to study [17]

$$\arg\min_{\boldsymbol{X}} \ \frac{1}{2} \left\| \boldsymbol{Y} - \boldsymbol{H}\boldsymbol{X} \right\|_F^2 + \lambda \mathcal{R}(\boldsymbol{X}) \tag{2}$$

where the first term denotes the data consistency term aiming to impose the mathematical relation in (1), $\mathcal{R}(.)$ is a learnable regularizer and λ, μ are regularization parameters. However, the optimization problem in study [17] is not able to fully utilize the low-rank properties and the ring-like structure of the LiDAR data, thus deriving a solution which is not able to perform in real-time scenarios and at high fps. To address this gap, our study introduces a novel optimization problem that combines proper handcrafted and learnable regularizers, thus effectively utilizing the distinct characteristics of LiDAR data. As a result, the proposed method not only achieves state-of-the-art performance but also outperforms in real-time scenarios, a critical requirement for applications such as SLAM algorithms. This marks a notable advancement over the existing LiDAR Super-Resolution literature.

III. Proposed method

A. Proposed Optimization Problem

Considering the specific structure of the range images derived from 3D LiDAR point clouds and motivated by relation (1), we formulate the following novel optimization problem

$$\arg\min_{\boldsymbol{X}} \ \frac{1}{2} \left\| \boldsymbol{Y} - \boldsymbol{H}\boldsymbol{X} \right\|_F^2 + \lambda \mathcal{R}(\boldsymbol{X}) \ + \mu \left\| \nabla_h \boldsymbol{X} \right\|_F^2, \tag{3}$$

where the first term denotes the data consistency term, $\mathcal{R}(.)$ is a learnable regularizer that aims to promote the properties of the range images, and λ, μ are regularization parameters. Moreover, since each row of the reconstructed range image $\boldsymbol{X}$ represents a different LiDAR sensor channel, and adjacent pixels typically exhibit similar values, we propose an additional handcrafted regularizer denoted as $\nabla_h \boldsymbol{X}$. In more detail, the horizontal gradient of $\boldsymbol{X}$, is introduced to maintain continuity across the sensor's channels, thereby ensuring consistent and coherent data representation in the LiDAR system.

Authorized licensed use limited to: University of Patras. Downloaded on January 13,2025 at 11:46:23 UTC from IEEE Xplore. Restrictions apply.

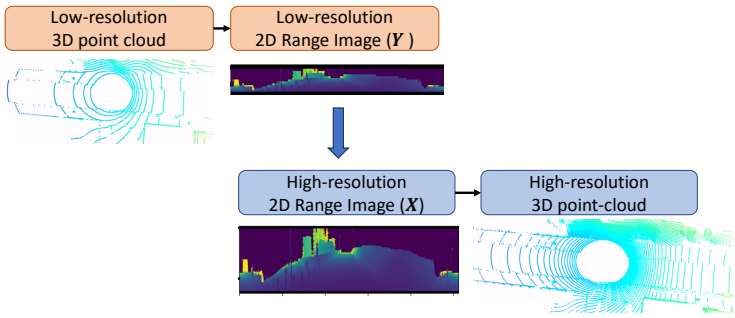

Fig. 1: The vehicle equipped with a 16-channel LiDAR sensor captures low-resolution 3D point clouds. The sparse point clouds are then projected into the range view domain deriving a low-resolution range image. Based on the inherent properties of the LiDAR data i.e., the ring-like structure and the low-rank properties due to strong correlation among points, we propose a novel optimization problem is proposed in equation (3) to estimate the corresponding high resolution range image. After that the estimated range image is projected back to the 3D domain, resulting in a dense high-resolution point cloud.

B. Optimization based Deep Unrolling model

In this section, we provide details on the designing of the proposed explainable deep learning model based on the solution of the proposed optimization problem in (3).

1) Solver of the Optimization problem: Considering the complexity of optimization problem (3), the variable splitting and alternating optimization methodology [19] can be utilized to decompose the original problem into several smaller and easier problems. In more detail, the Half Quadratic Splitting [20] approach is employed to solve efficiently the considered problem.

To split the problem into more tractable sub-problems, an auxiliary variable $\boldsymbol{B} \in \mathbb{R}^{N\times M}$ is introduced, which reformulates problem (3) into the following equivalent version

$$\begin{aligned} \arg\min_{\boldsymbol{X}} \ & \frac{1}{2}\left\|\boldsymbol{Y}-\boldsymbol{H}\boldsymbol{X}\right\|_F^2 + \lambda\mathcal{R}(\boldsymbol{B}) \ + \mu\left\|\nabla_h \boldsymbol{X}\right\|_F^2 \\ & s.t. \quad \boldsymbol{B}-\boldsymbol{X}=0. \end{aligned}$$

The corresponding cost function of the HQS is given as follows

$$\mathcal{L}(\boldsymbol{X},\boldsymbol{B}) = \frac{1}{2}\left\|\boldsymbol{Y}-\boldsymbol{H}\boldsymbol{X}\right\|_F^2 + \mu\mathcal{R}(\boldsymbol{B}) + \frac{b}{2}\left\|\boldsymbol{B}-\boldsymbol{X}\right\|_F^2 + \mu\left\|\nabla_h \boldsymbol{X}\right\|_F^2 \quad (4)$$

where b is a penalty parameter. Employing the variable-splitting procedure, we aim to solve the following iterative problems

$$\boldsymbol{X}^{(k+1)} = \arg\min_{\boldsymbol{X}^{(k)}} \frac{1}{2}\left\|\boldsymbol{Y}-\boldsymbol{H}\boldsymbol{X}^{(k)}\right\|_F^2 + \frac{b}{2}\left\|\boldsymbol{B}^{(k)}-\boldsymbol{X}^{(k)}\right\|_F^2 + \mu\left\|\nabla_h \boldsymbol{X}\right\|_F^2, \quad (5a)$$

$$\boldsymbol{B}^{(k+1)} = \arg\min_{\boldsymbol{B}} \lambda\mathcal{R}(\boldsymbol{B}) + \frac{b}{2}\left\|\boldsymbol{B}-\boldsymbol{X}^{(k+1)}\right\|_F^2 . \quad (5b)$$

Data consistency Module - subproblem (5a): The goal of the data consistency module is to derive an estimation of the high-resolution range image by enforcing the degradation constraint in (1) and the smooth prior along the horizontal direction of the range image. To be more specific, the gradient descent is used to tackle subproblem (5a), thus deriving the following computationally efficient solution

$$\begin{aligned} \boldsymbol{X}^{(k+1)} &= \boldsymbol{X}^{(k)} - \epsilon(-\boldsymbol{H}^T(\boldsymbol{Y}-\boldsymbol{H}\boldsymbol{X}^{(k)}) + b\boldsymbol{B}^{(k)} \\ &\quad + \mu\nabla_h^T\nabla_h\boldsymbol{X}^{(k)}) \\ &= \boldsymbol{X}^{(k)} - \epsilon\boldsymbol{H}^T\boldsymbol{H}\boldsymbol{X}^{(k)} + \epsilon\boldsymbol{H}^T\boldsymbol{Y} - \epsilon b\boldsymbol{B}^{(k)} \\ &\quad - \epsilon\mu\nabla_h^T\nabla_h\boldsymbol{X}^{(k)} \end{aligned} \quad (6)$$

where ϵ is the learning rate of the gradient descent and k denotes the number of the iteration.

Denoising Module - subproblem (5b): The denoising module aims to provide a clearer range image given as input the estimated range image from the data consistency module in equation (6). In particular, concerning (5b), this equation corresponds to the proximal operator of the learnable regularizer. The goal of this solution is to actually denoise the output from the previous subproblem [16]. Thus, equation (5b) can be replaced by a suitable deep learning based denoiser, as shown below

$$\boldsymbol{B}^{(k+1)} = \mathcal{G}_\theta(\boldsymbol{X}^{(k+1)}) \quad (7)$$

where $\mathcal{G}_\theta$ denotes the corresponding neural network. Note that the neural-network $\mathcal{G}_\theta$ can be optimized via training data to capture the properties of the signals of interest, thus acting as a prior for the range images. Regarding the architecture of the deep learning based denoiser, we employed an autoencoder neural network with convolutional and deconvolution layers, thus forming U-shaped network. The network consists of two main components: an encoder for downsampling and a decoder for upsampling, forming a symmetrical structure.

The rationale behind selecting an autoencoder for this application stems from the inherent low-rank properties of the LiDAR data. LiDAR datasets typically exhibit strong correlations among points, leading to data that can be effectively represented in a reduced dimensional space. An autoencoder is particularly well-suited for this scenario, as its primary function is to discover and leverage the low-dimensional representation of the input. This capability of the proposed neural-network to exploit the low-rank nature of the data allows it to

Authorized licensed use limited to: University of Patras. Downloaded on January 13,2025 at 11:46:23 UTC from IEEE Xplore. Restrictions apply.

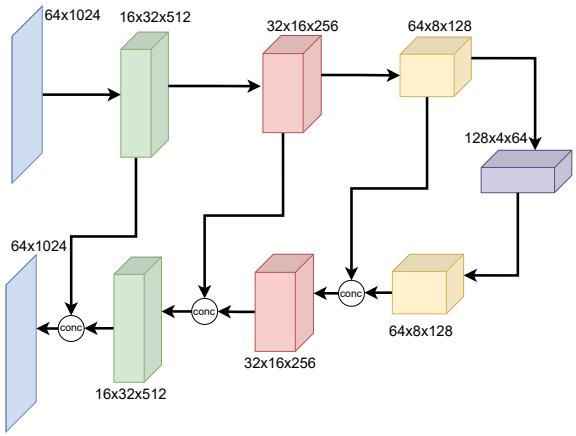

Fig. 2: The CNN-based autoencoder denoiser used in equation (7).

extract essential features from the LiDAR data, thus enhancing the denoising process. Furthermore, by operating within a reduced dimensional space, the autoencoder can achieve high performance with lower computational overhead, making it a suitable choice for applications where efficiency and speed are critical, such as in real-time autonomous driving systems.

The Encoder part comprises of four convolutional layers. Each layer uses a 3x3 kernel with a stride of 2 and padding of 1, progressively increasing the number of channels from 1 to 128. Specifically, the first layer maps the single-channel input to 16 channels, followed by subsequent layers that double the channels from 16 to 32, 32 to 64, and finally 64 to 128. After each convolutional operation, we apply the Gaussian Error Linear Unit (GELU) activation function, which allows for nonlinear transformation of the data.

The Decoder mirrors the encoder with four corresponding transpose convolutional layers. These layers are designed to incrementally decrease the number of channels while upsampling the feature maps back to the original input size. Starting from 128 channels, the first transpose convolutional layer reduces it to 64. Each subsequent layer halves the number of channels, finally restoring to a single-channel output. The GELU activation function is consistently applied after each transpose convolution. Furthermore, our architecture integrates skip connections between the encoder and decoder. After each transpose convolution, the output is concatenated with the corresponding feature map from the encoder, enhancing the network's ability to recover fine details during the upsampling process. Figure 2 illustrates the architecture of the denoiser.

Final Iterative rules: Based on the equations (6), (7), we formulate the following iterative solver for the proposed optimization problem

$$\boldsymbol{X}^{(k+1)} = \boldsymbol{X}^{(k)} - \epsilon \boldsymbol{H}^T \boldsymbol{H} \boldsymbol{X}^{(k)} + \epsilon \boldsymbol{H}^T \boldsymbol{Y} - \epsilon b \boldsymbol{B}^{(k)} - \epsilon \mu \nabla_h^T \nabla_h \boldsymbol{X}^{(k)} \tag{8a}$$

$$\boldsymbol{B}^{(k+1)} = \mathcal{G}_\theta(\boldsymbol{X}^{(k+1)}) \tag{8b}$$

In the following, we propose an explainable-by-design deep learning architecture based on the Deep Unrolling strategy. This model is established by unrolling the iterations of the local solver as depicted in equation (8).

C. Proposed Deep Unrolling architecture

The LiDAR super resolution problem in (3) can be solved by iteratively update equation (8a) and (8b). However, a more concrete iterative solver can be derived by substituting equation (8b) to equation (8a), thus designing the following iteration map

$$\boldsymbol{X}^{(k+1)} = \boldsymbol{X}^{(k)} - \epsilon \boldsymbol{H}^T \boldsymbol{H} \boldsymbol{X}^{(k)} + \epsilon \boldsymbol{H}^T \boldsymbol{Y} - \epsilon b \mathcal{G}_\theta(\boldsymbol{X}^{(k)}) - \epsilon \mu \nabla_h^T \nabla_h \boldsymbol{X}^{(k)} \tag{9}$$

Note that the above iteration map contains also the gradient smoothing prior denoted as $\nabla_h^T \nabla_h \boldsymbol{X}^{(k)}$. Taking into account that the primary goal of the above matrices is to promote smoothness priors across the horizontal dimension of the range-image data and capture their ring-like structure. In light of this observation, the above matrices can be replaced by a learnable convolution layer consisting of 1D kernels with specific structure to approximate the first-order difference operations of the gradient ∇_h. To ensure the ring-like structure of the reconstructed data, the learnable kernels perform circular convolution. Additionally, to increase the representation capacity of the proposed Deep Unrolling model, we replace the matrix $\boldsymbol{H}^T$ that appears in the product $\boldsymbol{H}^T \boldsymbol{Y}$ with a learnable convolutional kernel P_1. To this end, the above equations are transformed as

$$\boldsymbol{X}^{(k+1)} = \boldsymbol{X}^{(k)} - \alpha_1 \boldsymbol{H}^T \boldsymbol{H} \boldsymbol{X}^{(k)} + \alpha_2 P_1 * \boldsymbol{Y} - \alpha_3 \mathcal{G}_\theta(\boldsymbol{X}^{(k)}) - \alpha_4 P_2 * \boldsymbol{X}^{(k)} \tag{10}$$

where P_1 denotes a convolution layer to increase the vertical dimension of the low-resolution data from 16 to 64, P_2 is a circular convolution layer with a kernel $(1 \times L)$ to approximate the horizontal gradient calculation and replace the matrix dependent on ∇_h and L is a hyperparameter that controls the size of the corresponding kernel. Additionally, $\alpha_1 = \epsilon$, $\alpha_2 = \epsilon$, $\alpha_3 = \epsilon b$, $\alpha_4 = \epsilon \mu$ can also be learnable parameters.

The proposed iteration map contains learnable parameters that can be optimize via backpropagation i.e., the weights of the denoiser $\mathcal{G}_\theta(\cdot)$, the convolution kernels P_1, P_2 and the penalty parameters $\alpha_1, \alpha_2, \alpha_3, \alpha_4$. Our aim is to develop an explainable deep network based on the proposed well-justified optimization solver (10). To this end, a small number of iterations of the solver, such as $K = 5 - 10$, are unrolled to establish a highly interpretable network. Each iteration of the proposed solver corresponds to a distinct layer within this K-layer unrolling architecture. Consequently, the developed Deep Unrolling network offers notable benefits compared to traditional deep learning models, including enhanced interpretability and a more concise structure. Figure 3 illustrates the unrolling architecture.

Authorized licensed use limited to: University of Patras. Downloaded on January 13,2025 at 11:46:23 UTC from IEEE Xplore. Restrictions apply.

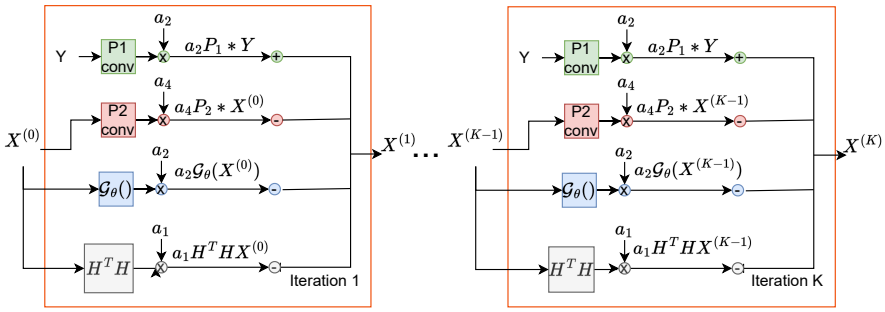

Fig. 3: The proposed Deep Unrolling model. In particular, a small number of iterations, say K, of the solver in (10) are unrolled and treated as a deep learning architecture. Each iteration of the iterative solver is considered a unique layer of the proposed model, resulting in a K-layer deep learning architecture.

Loss function: For the optimization of our Deep Unrolling model, we employ a loss function that evaluates both the quality of reconstructed range images and the reconstructed point clouds. Specifically, given training pairs, the DU model is trained as follows:

$$l(\theta) = \sum_{i=1}^{p} w_1 \left\| \boldsymbol{X}^{(K)} i - \boldsymbol{X} gt, i \right\|_1 + w_2 \left\| \mathcal{F}(\boldsymbol{X} i^{(K)}) - \mathcal{F}(\boldsymbol{X} gt, i) \right\|_1, \quad (11)$$

where $\boldsymbol{X}_i^{(K)}$ is the output from the Deep Unrolling network for a given low-resolution range image $\boldsymbol{Y} i$, $\boldsymbol{X} gt, i$ represents the ith high-resolution ground truth range image, and $\mathcal{F}(\boldsymbol{X} i^{(K)}), \mathcal{F}(\boldsymbol{X} gt, i)$ are the reconstructed and ground-truth 3D point clouds, respectively. The weights w_1 and w_2 balance the impact of each loss component.

IV. Numerical results

To verify the effectiveness and applicability of the proposed methodology, a set of real-world experiments were conducted in the scope of LiDAR Super-Resolution problem. These experiments were designed to test the capability of our model to upscale data from a 16-channel LiDAR sensor to the resolution of a 64-channel LiDAR. After that the effectiveness of our approach was evaluated in the context of a LiDAR SLAM system, specifically utilizing the LeGO-LOAM algorithm. *The goal is to illustrate that the proposed algorithm is able to provide state-of-the-art results in a real-world application with real-time performance.*

A. Simulation setup

1) Dataset: For training our Deep Unrolling model, we used the CARLA simulator [21] to generate high and low-resolution point clouds. We simulated a 64-channel LiDAR, OS-1-64, in CARLA Town 1 and Town 2 scenes, to match the field of view (33.2°) of the Ouster dataset. Correspondingly, a 16-channel LiDAR, OS-1-16, was also simulated in the same scenes to generate low-resolution point clouds. These point clouds were then projected onto range images [9], resulting in pairs of 64x1024 and 16x1024 resolution images.

For the testing phase, the Ouster LiDAR dataset was used, comprising a 15-minute San Francisco drive employing an OS-1-64 3D LiDAR sensor. Based on the point clouds derived from the 64-channel LiDAR sensor, we projected them into high-resolution range image with dimension 64×1024 served as ground truth. The corresponding low-resolution range images were generated by selecting 16 out of 64 channels from the high-resolution images.

2) Implementations Details: Regarding the Deep Unrolling model, we unrolled the derived HQS solver in equation (10) for $k = 5$ iterations, thus designing a 5-layer deep learning architecture. To optimize the learnable parameters of the deep-unrolling model, we minimized the loss function in (11) by adopting the Adam optimizer with learning rate equal to $1e-03$ for 50 epochs.

B. Evaluation study - Performance on the range view domain

Since the proposed method along with the other state-of-the-art approaches tackle the LiDAR Super-Resolution problem in the range image domain, Table I summarizes the average results in terms of the L1 error for the quality of the reconstructed high-resolution range images.

Comparison with Deep Learning Methods: The table illustrates that our Deep Unrolling approach significantly surpasses other deep learning methods, such as the U-net-based network [10] and the Res-net network [22], in terms of accuracy. Additionally, our method offers substantial computational benefits, with less than 97% parameters compared to these approaches. This efficiency stems from the explainable and structured nature of our methodology, where the Deep Unrolling model is derived from iterating a mathematically justified optimization problem.

Comparison with the optimization-based method [17]: Although method [17] is also an optimization-based approach, the proposed DU method is able to provide more accurate results. The accuracy gains can be justified by the fact that the proposed method is able to fully utilize the inherent properties of the LiDAR data, taking into account their low-rank structure, the correlation of neighboring points and the ring-like structure of the data, as proposed in equation (3).

Authorized licensed use limited to: University of Patras. Downloaded on January 13,2025 at 11:46:23 UTC from IEEE Xplore. Restrictions apply.

TABLE I: Quantitative results on the Range view domain

Dataset	Method	L1 error	Number of parameters (milions)
Ouster	Linear	0.0324	-
	Cubic	0.0467	-
	SR-ResNet [22]	0.0231	$35M$
	SRAE [10]	0.0214	$30M$
	method [17]	0.0208	$\mathbf{0.1M}$
	proposed DU	**0.0190**	$\mathbf{0.2M}$

Final, an aspect not extensively addressed in LiDAR Super-Resolution research is the ability of the developed methodologies to operate in real-time. This functionality is essential for their deployment in vehicles, especially for providing high-resolution inputs necessary for autonomous driving applications such as SLAM algorithms. In the subsequent section, we will focus on demonstrating the significant advantages of our proposed solution in terms of both accuracy and real-time performance within a LiDAR-SLAM algorithm context.

C. Evaluation study - Impact on LiDAR-SLAM application

To thoroughly evaluate our proposed method, we tested the quality of reconstructed point clouds in a practical setting, specifically using a LiDAR-based SLAM approach which implements the LeGO-LOAM [18] algorithm. Our study highlights the real-time capabilities of the proposed DU model, recognizing its significance in the context of autonomous vehicle systems. The LeGO-LOAM method was chosen for this evaluation due to its state-of-the-art performance in real-time pose estimation and 3D mapping Our assessment was conducted using two specific sequences from the Ouster dataset:

- A simpler trajectory represented by 3600 consecutive scans.
- A more complex path characterized by 6000 scans.

Given these trajectories, we evaluate the performance of the LeGO-LOAM with the following inputs:

- High-resolution 3D point clouds created via the Super Resolution Autoencoder (SRAE) approach [10].
- Low-resolution 3D point clouds sourced from a 16-channel LiDAR sensor.
- High-resolution 3D point clouds created by methodology [17]
- High-resolution 3D point clouds generated using the proposed Deep Unrolling method.

For the analysis, we adopted the evaluation metrics of studies [16], [23] i.e., the cumulative distribution function (CDF) of Absolute Pose Error (APE) regarding translation along with detailed trajectory heatmaps.

The results presented in Table II offer a comprehensive comparison of various methods applied to the LiDAR SLAM task, focusing on the Absolute Pose Error (APE) concerning the translation part in meters, and real-time performance measured in frames per second. For both datasets (3600 and 6000 scans), the LiDAR-16 channel method exhibits significant limitations. With a mean APE of 8.09m for 3600 scans and a substantial increase to 315.80m for 6000 scans, it demonstrates the challenges inherent in low-resolution data, particularly in complex environments. The sparse 3D point clouds from the 16-channel LiDAR lead to inaccurate feature generation, impacting trajectory accuracy in the LeGO-LOAM system.

From the results in Table I, it's evident that the proposed Deep Unrolling method significantly outperforms both the standalone LiDAR-16 channel method and other advanced approaches in LiDAR Super-Resolution. Concerning the comparison with the other two considered methods, the proposed Deep Unrolling method exhibits impressive percentage gains over the SR-AE and method [17]. Specifically, for the 3600 scans trajectory, the DU method shows a 67% improvement in RMSE compared to SR-AE and about a 20% improvement over method [17]. In the more challenging 6000 scans trajectory, these gains are even more pronounced, with the DU method achieving over 70% improvement in RMSE relative to SR-AE and around 25% compared to method [17]. Figure 4 and 5 also verify the above mentioned results.

Additionally. the Deep Unrolling method notably excels in real-time execution, achieving an impressive 100 fps, substantially surpassing the 1 fps of the SR-AE and 5 fps of method [17]. This high-speed performance makes the DU method exceptionally well-suited for real-time autonomous driving scenarios. The comparatively slower performance of SR-AE and method [17] can be attributed to their use of the Monte Carlo methodology during inference. To reconstruct a single point cloud, these methods require multiple inferences, such as 50 per point cloud, which significantly hinder their real-time capabilities. In contrast, the proposed optimization problem within the DU method effectively captures the structural properties of LiDAR data, enabling it to accurately reconstruct high-resolution point clouds with just a single inference.

V. Conclusion

In this study, the LiDAR Super-Resolution problem was considered for improving the performance of low-cost and low-resolution LiDAR sensors, particularly for SLAM applications. By utilizing the inherent properties of the LiDAR data, a novel optimization problem was proposed to solve the considered task. This problem combines a learnable regularizer, designed as a neural network to capture the low-rank characteristics of the LiDAR data, with a handcrafted regularizer that focuses on its ring-like structure. Based on the solution of the proposed problem, an explainable Deep Unrolling architecture was designed. Extensive numerical results in a real-world autonomous driving dataset verify the superiority of the proposed Deep Unrolling model in terms of accuracy, computational complexity and real-time performance compared to the current state-of-the-art approaches. In the future, we aim to explore various iterative optimization algorithms to solve the super-resolution problem and examine the impact of the algorithm to additional applications such as object detection.

References

[1] Y. Li and J. Ibanez-Guzman, "Lidar for autonomous driving: The principles, challenges, and trends for automotive lidar and perception

Authorized licensed use limited to: University of Patras. Downloaded on January 13,2025 at 11:46:23 UTC from IEEE Xplore. Restrictions apply.

TABLE II: LiDAR SLAM: Absolute Pose Error w.r.t translation part (m).

Ouster Dataset	Method	mean	rmse	max	median	std	Real-time (fps) performance
3600 scans	LiDAR-16	8.09	9.11	21.99	6.70	4.18	-
	SRAE [10]	8.75	10.25	28.75	7.95	5.33	2
	method [17]	3.55	4.04	9.48	3.24	1.93	5
	proposed DU	**2.83**	**3.16**	**8.51**	**2.83**	**1.41**	**100**
6000 scans	LiDAR-16	315.80	344.42	553.35	350.96	137.44	-
	SR-AE [10]	55.34	67.35	202.11	47.84	38.37	2
	method [17]	23.19	27.75	56.12	21.11	15.24	5
	proposed DU	**7.87**	**9.60**	**36.37**	**6.04**	**5.49**	**100**

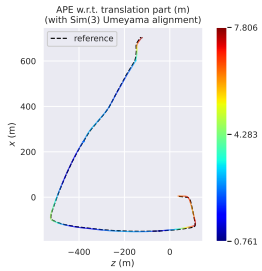

(a) proposed DU heatmap

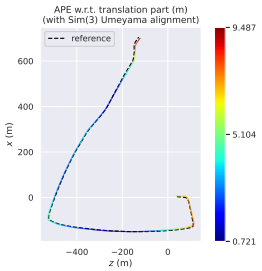

(b) method [17] heatmap

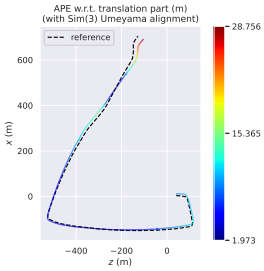

(c) SR-AE [10] heatmap

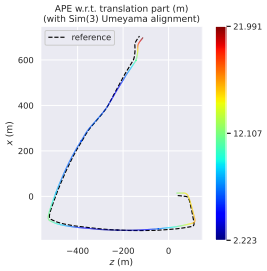

(d) LiDAR-16 heatmap

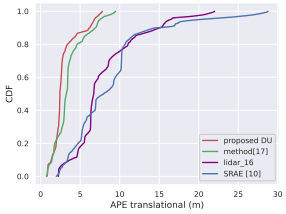

(e) CDF of APE translational

Fig. 4: CDF and heatmaps for the proposed DU, method [17], the 16-channel LiDAR and the method SR-AE [10] using as reference trajectory the path derived from the LiDAR with 64 channels.

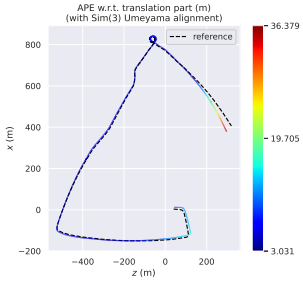

(a) proposed DU heatmap

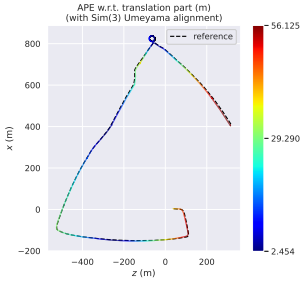

(b) method [17] heatmap

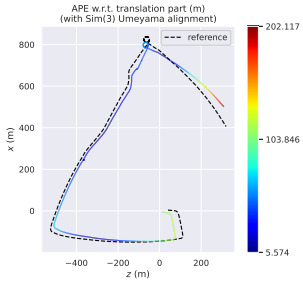

(c) SR-AE [10] heatmap

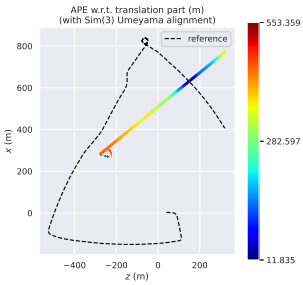

(d) LiDAR-16 heatmap

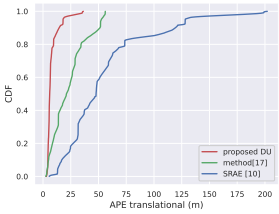

(e) CDF of APE translational

Fig. 5: CDF and heatmaps for the proposed DU, method [17], the 16-channel LiDAR and the method SR-AE [10] using as reference trajectory the path derived from the LiDAR with 64 channels.

Authorized licensed use limited to: University of Patras. Downloaded on January 13,2025 at 11:46:23 UTC from IEEE Xplore. Restrictions apply.

systems," *IEEE Signal Processing Magazine*, vol. 37, no. 4, pp. 50–61, 2020.

[2] J. Wu, H. Xu, and J. Zhao, "Automatic lane identification using the roadside lidar sensors," *IEEE Intelligent Transportation Systems Magazine*, vol. 12, no. 1, pp. 25–34, 2020.

[3] X. Zuo, Y. Yang, P. Geneva, J. Lv, Y. Liu, G. Huang, and M. Pollefeys, "Lic-fusion 2.0: Lidar-inertial-camera odometry with sliding-window plane-feature tracking," in *2020 IEEE/RSJ International Conference on Intelligent Robots and Systems (IROS)*, 2020, pp. 5112–5119.

[4] H. Ye, Y. Chen, and M. Liu, "Tightly coupled 3d lidar inertial odometry and mapping," in *2019 International Conference on Robotics and Automation (ICRA)*, 2019, pp. 3144–3150.

[5] J. Yue, W. Wen, J. Han, and L.-T. Hsu, "3d point clouds data super resolution-aided lidar odometry for vehicular positioning in urban canyons," *IEEE Transactions on Vehicular Technology*, vol. 70, no. 5, pp. 4098–4112, 2021.

[6] D. Tian, D. Zhao, D. Cheng, and J. Zhang, "Lidar super-resolution based on segmentation and geometric analysis," *IEEE Transactions on Instrumentation and Measurement*, vol. 71, pp. 1–17, 2022.

[7] L. Yu, X. Li, C.-W. Fu, D. Cohen-Or, and P.-A. Heng, "Pu-net: Point cloud upsampling network," in *Proceedings of the IEEE conference on computer vision and pattern recognition*, 2018, pp. 2790–2799.

[8] P. Sun, W. Wang, Y. Chai, G. Elsayed, A. Bewley, X. Zhang, C. Sminchisescu, and D. Anguelov, "Rsn: Range sparse net for efficient, accurate lidar 3d object detection," in *Proceedings of the IEEE/CVF Conference on Computer Vision and Pattern Recognition*, 2021, pp. 5725–5734.

[9] L. Fan, X. Xiong, F. Wang, N. Wang, and Z. Zhang, "Rangedet: In defense of range view for lidar-based 3d object detection," in *Proceedings of the IEEE/CVF International Conference on Computer Vision (ICCV)*, October 2021, pp. 2918–2927.

[10] T. Shan, J. Wang, F. Chen, P. Szenher, and B. Englot, "Simulation-based lidar super-resolution for ground vehicles," *Robotics and Autonomous Systems*, vol. 134, p. 103647, 2020. [Online]. Available: https://www.sciencedirect.com/science/article/pii/S0921889020304875

[11] Y. Kwon, M. Sung, and S.-E. Yoon, "Implicit lidar network: Lidar super-resolution via interpolation weight prediction," in *2022 International Conference on Robotics and Automation (ICRA)*. IEEE, 2022, pp. 8424–8430.

[12] K. Muhammad, A. Ullah, J. Lloret, J. D. Ser, and V. H. C. de Albuquerque, "Deep learning for safe autonomous driving: Current challenges and future directions," *IEEE Transactions on Intelligent Transportation Systems*, vol. 22, no. 7, pp. 4316–4336, 2021.

[13] L. Wan, Y. Sun, L. Sun, Z. Ning, and J. J. P. C. Rodrigues, "Deep learning based autonomous vehicle super resolution doa estimation for safety driving," *IEEE Transactions on Intelligent Transportation Systems*, vol. 22, no. 7, pp. 4301–4315, 2021.

[14] Y. Yang, J. Sun, H. Li, and Z. Xu, "Admm-csnet: A deep learning approach for image compressive sensing," *IEEE Transactions on Pattern Analysis and Machine Intelligence*, vol. 42, no. 3, pp. 521–538, 2020.

[15] T. T. N. Mai, E. Y. Lam, and C. Lee, "Deep unrolled low-rank tensor completion for high dynamic range imaging," *IEEE Transactions on Image Processing*, vol. 31, pp. 5774–5787, 2022.

[16] A. Gkillas, A. S. Lalos, E. K. Markakis, and I. Politis, "A federated deep unrolling method for lidar super-resolution: Benefits in slam," *IEEE Transactions on Intelligent Vehicles*, pp. 1–17, 2023.

[17] A. Gkillas, A. S. Lalos, and D. Ampeliotis, "An efficient deep unrolling super-resolution network for lidar automotive scenes," in *2023 IEEE International Conference on Image Processing (ICIP)*, 2023, pp. 1840–1844.

[18] T. Shan and B. Englot, "Lego-loam: Lightweight and ground-optimized lidar odometry and mapping on variable terrain," in *2018 IEEE/RSJ International Conference on Intelligent Robots and Systems (IROS)*, 2018, pp. 4758–4765.

[19] S. Boyd, N. Parikh, E. Chu, J. Eckstein, S. Boyd, N. Parikh, E. Chu, B. Peleato, and J. Eckstein, "Distributed Optimization and Statistical Learning via the Alternating Direction Method of Multipliers," *Foundations and Trends R in Machine Learning*, vol. 3, no. 1, pp. 1–122, 2010.

[20] D. Geman and C. Yang, "Nonlinear image recovery with half-quadratic regularization," *IEEE Transactions on Image Processing*, vol. 4, no. 7, pp. 932–946, 1995.

[21] A. Dosovitskiy, G. Ros, F. Codevilla, A. Lopez, and V. Koltun, "CARLA: An open urban driving simulator," in *Proceedings of the 1st Annual Conference on Robot Learning*, 2017, pp. 1–16.

[22] C. Ledig, L. Theis, F. Huszár, J. Caballero, A. Cunningham, A. Acosta, A. Aitken, A. Tejani, J. Totz, Z. Wang, and W. Shi, "Photo-realistic single image super-resolution using a generative adversarial network," in *2017 IEEE Conference on Computer Vision and Pattern Recognition (CVPR)*, 2017, pp. 105–114.

[23] N. Piperigkos, A. S. Lalos, and K. Berberidis, "Graph laplacian diffusion localization of connected and automated vehicles," *IEEE Transactions on Intelligent Transportation Systems*, vol. 23, no. 8, pp. 12 176–12 190, 2022.

Authorized licensed use limited to: University of Patras. Downloaded on January 13,2025 at 11:46:23 UTC from IEEE Xplore. Restrictions apply.