Image Segmentation for the Detection of Hard Exudates in Diabetic Retinopathy

Anna Del Savio
anna.delsavio@studenti.unipd.it

Laura Legrottaglie
laura.legrottaglie@studenti.unipd.it

Abstract

Diabetic Retinopathy (DR) is a leading cause of vision impairment worldwide, with hard exudates being a critical biomarker for disease severity. This study explores deep learning-based segmentation models to automatically identify and segment hard exudates in retinal fundus images. We evaluate and compare four architectures: UNet, Attention UNet, DeepLabV3, and Swin UNETR, leveraging the IDRiD dataset for model training and validation. To address the high class imbalance between lesion and background pixels, we experiment different loss functions, identifying Weighted BCE as the most effective one. Additionally, a negative mask approach is introduced to improve segmentation precision by penalizing false positives in regions occupied by other lesions. Our results show that Swin UNETR outperforms other models, achieving a Dice score of 0.693 and an AUC-PR of 0.738. However, UNet and Attention UNet also demonstrate similar strong performance, particularly when combined with the negative mask approach. Despite achieving good segmentation performance, state-of-the-art results (Dice $\geq$ 0.80) were not reached due to computational constraints and limited training time.

1. Introduction

Diabetes is a chronic condition characterized by elevated blood glucose levels due to insufficient insulin production. [1] It affects approximately 425 million adults worldwide and can lead to serious complications involving the retina, heart, nerves, and kidneys. One of the most severe complications is Diabetic Retinopathy (DR), a condition where retinal blood vessels become damaged, causing them to swell and leak fluids or blood. If left untreated, DR can progress to advanced stages, leading to vision impairment or even blindness. Globally, it is responsible for 2.6% of blindness cases.[2] The risk of developing DR increases with the duration of diabetes, making regular retinal screenings essential for early detection and timely intervention. DR is diagnosed through retinal imaging, where specific types of lesions indicate its presence. These lesions include microaneurysms (MA), haemorrhages (HM), and two forms of exudates: soft and hard exudates (EX). Microaneurysms are the earliest indicators of DR and appear as tiny red dots on the retina due to weakened blood vessel walls. Haemorrhages are larger than microaneurysms and have irregular margins. Hard exudates are bright yellow deposits on the retina caused by plasma leakage, while soft exudates are white patches that result from swelling in the nerve fibers. Diabetes is rapidly becoming a major global health challenge, and as the number of affected individuals rises, the pressure on healthcare systems and resources continues to grow. This underscores the urgent need for automated screening systems to detect DR efficiently. Deep learning-based approaches have revolutionized Diabetic Retinopathy detection by automating the analysis of retinal images, significantly reducing human error, enhancing early diagnosis, and accelerating clinical decision-making. The integration of convolutional neural networks (CNNs) and other deep learning architectures enable highly accurate identification and classification of DR-related lesions, reducing the dependency on specialized medical professionals, making DR screening more accessible, scalable, and cost-effective, ultimately improving the efficiency of large-scale screening programs.

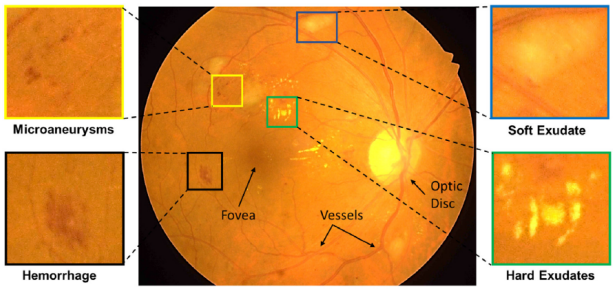

Figure 1: A retinal image, highlighting the normal structures (blood vessels, optic disc and fovea center) and retinal lesions associated with DR [2]

This project aims to explore and develop state-of-the-art models for the precise segmentation of a specific type of diabetic retinopathy lesion, the hard exudates, starting from

retinal fundus images. To achieve this goal, we will evaluate and compare multiple segmentation architectures, including UNet-based models (a modified UNet and Attention UNet), DeepLabv3, and Swin UNETR, a transformer-based approach that integrates hierarchical feature learning with self-attention mechanisms to capture both local and global contextual information. The objective is to identify the most effective architecture for accurate and reliable lesion segmentation. The performance of the models is evaluated using IDRiD (Indian Diabetic Retinopathy Image Dataset), a publicly available dataset for diabetic retinopathy analysis consisting of high-resolution retinal fundus images with corresponding expert-annotated masks for lesions. Although the primary objective is to segment hard exudates, the masks of other lesions will be leveraged to create a negative mask, helping the model distinguish regions to exclude and thereby enhancing segmentation precision.

2. Related work

Deep learning has significantly advanced medical image segmentation, with convolutional neural networks (CNNs) playing a crucial role in improving accuracy. The UNet architecture, introduced by Ronneberger et al. (2015), remains a foundational model in biomedical segmentation due to its encoder-decoder structure.[3] However, its standard formulation struggles with complex lesion patterns, particularly in cases where lesions are small. To address this, Attention UNet incorporates attention mechanisms to enhance focus on relevant regions, demonstrating improved performance in challenging segmentation tasks, including retinal lesion detection.[4]
The availability of annotated datasets has been instrumental in driving progress in retinal lesion segmentation. Among the most widely used, the Retinal-Lesions Dataset[5], IDRiD [6], and eOphta [7] provide high-quality pixel-level annotations for microaneurysms, hemorrhages, and exudates, enabling the development of more robust segmentation models.
To further improve segmentation accuracy, DeepLabV3 integrates Atrous Spatial Pyramid Pooling (ASPP) and dilated convolutions to capture multi-scale contextual information while preserving spatial resolution.
More recently, transformer-based architectures have gained attention in medical image analysis. Swin UNETR, which leverages Swin Transformers in place of conventional CNNs, utilizes self-attention mechanisms to model long-range dependencies. [8] This allows for improved contextual understanding and more precise segmentation of small, irregular retinal lesions, positioning it as a promising approach for lesion detection in retinal imaging.

3. Dataset

The dataset used for the retinal lesion segmentation task, as already mentioned, is IDRiD. The IDRiD dataset was part of the Diabetic Retinopathy Segmentation and Grading Challenge (IDRiD Challenge) in 2017. A key subtask of this challenge was retinal lesion segmentation, requiring the separate detection of four lesion types: microaneurysms (MAs), hard exudates (EXs), soft exudates (SEs), and hemorrhages (HEs). Each image has dimension of 4288 x 2848 pixels and can contain multiple lesions together. The dataset, along with its expert-annotated ground truths, was split into a training set and a test set, with images containing pixel-level annotations divided as 2/3 for training and 1/3 for testing. The table below shows the training and test dataset for each of the lesion present in the dataset.

Lesion Type	Training set	Test set
MA	54	27
HE	53	27
SE	26	14
EX	54	27

3.0.1 Preprocessing: CLAHE and patch extraction

To prepare the dataset for the image segmentation task, various preprocessing techniques have been applied to the original images and their corresponding masks. The lesion masks have been converted into binary masks to ensure compatibility with the loss functions used during training.
Fundus images often exhibit variability in brightness and contrast due to differences in illumination during image acquisition, making lesion detection more challenging. To address this, the dataset is processed with Contrast Limited Adaptive Histogram Equalization (CLAHE), a localized enhancement method that improves contrast without over-amplifying noise. CLAHE enhances local contrast by operating on small, non-overlapping tiles: it computes the histogram for each tile and applies a clip limit (set to 2.0 in this case) to prevent excessive contrast amplification in homogeneous regions. The enhanced image is obtained by applying the Cumulative Distribution Function (CDF) to each tile, followed by bilinear interpolation to smooth boundaries.
Despite these enhancements, a significant challenge remains: the dataset is relatively small, and lesions occupy only a small fraction of the total fundus image area. To address this, a patch extraction strategy is implemented to increase the number of training samples while improving the balance between lesion and non-lesion regions. Images are divided into overlapping patches of 512×512 pixels with a stride of 192 pixels, ensuring that lesions partially cut by one patch are fully captured in adjacent patches along with their surrounding context. To further improve the dataset balance and avoid excessive negative patches, the

last column and row of each image are skipped, resulting in a non-uniform sampling strategy that provides better coverage of the regions of interest. This approach yields a total of 8640 patches from the 54 original training images, comprising 3505 positive and 5135 negative patches, where a patch is considered positive if the sum of pixel intensities in the lesion mask exceeds 100.

3.0.2 Preprocessing: Data augmentation

Data augmentation techniques are applied to enhance model generalization by introducing variability in the training samples. The augmentation process includes random horizontal and vertical flips, random brightness adjustments (ranging from 0.8 to 1.2) simulate variations in lighting conditions, improving robustness to illumination changes. A random hue adjustment (ranging from -0.05 to 0.05) is also applied to account for slight color variations in fundus images. These transformations help diversify the training data, reducing overfitting and improving segmentation performance.

4. Methodology

In this section, we introduce the proposed models, providing a detailed explanation of their architectures, training procedures, and corresponding hyperparameters. The dataset is divided into 90% for training and 10% for validation, ensuring a well-balanced distribution for model optimization and evaluation. This results in 7776 patches for training and 864 patches for validation.

4.1. The choice of the loss function

The lesion segmentation task in this study presents a highly imbalanced scenario, where background pixels significantly outnumber lesion pixels. Consequently, using standard Binary Cross-Entropy (BCE) Loss is suboptimal, as the model tends to favor background predictions, leading to poor lesion detection. To mitigate this issue, several loss functions have been explored:

- Weighted Binary Cross-Entropy (WBCE) Loss:

$$L_{\text{WBCE}} = -\frac{1}{N}\sum_{i=1}^{N}\left(w \cdot y_i \log \sigma(\hat{y}_i) + (1-y_i)\log(1-\sigma(\hat{y}_i))\right)$$

  where w is a weighting factor to emphasize lesion pixels, set to 8 in this work.

- Focal Loss:

$$FL(p_t) = -\alpha(1-p_t)^{\gamma}\log(p_t)$$

  where α balances class importance, and γ down-weights easy examples to focus on hard-to-classify lesions. Here, $\alpha = 0.25$ and $\gamma = 2$.[9]

- Tversky Loss:

$$TL = 1 - \frac{TP}{TP + \alpha \cdot FN + \beta \cdot FP}$$

  where α (default 0.3) penalizes false negatives, and β (default 0.7) penalizes false positives, prioritizing lesion detection over false positives.[10]

4.2. Segmentation Models

4.2.1 UNet

UNet is characterized by a symmetric encoder-decoder structure with skip connections which gives it the characteristic "U-shape", as it's possible to see in Fig.2.

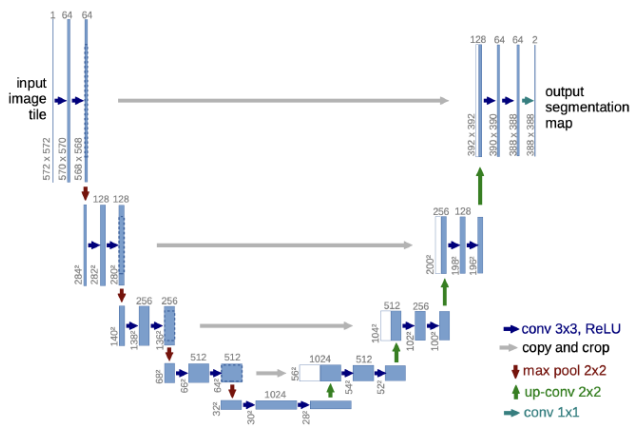

Figure 2: UNet architecture [3]

The encoder (contracting path) applies two 3×3 convolutions with ReLU activation per block, followed by 2×2 max pooling to downsample spatial dimensions while increasing feature channels. The bottleneck captures deeper features, bridging the encoder and decoder. The decoder (expanding path) uses transposed convolutions for upsampling, concatenating with encoder feature maps via skip connections to preserve spatial details. A final 1×1 convolution generates the segmentation mask.

As the baseline model for the diabetic retinopathy lesion segmentation task we have adopted a modified UNet architecture to enhance lesion detection performance. Instead of the classical UNet with the 64 initial feature channels, our model starts with 16 channels, progressively doubling to 1024 at the bottleneck. Doing this the network avoids to over-extract high-level features too early, potentially losing fine lesion details in the initial layers which are essential for segmenting small lesions effectively. Additionally, the depth of the network is increased, incorporating seven encoder-decoder levels instead of the traditional five, allowing the model to capture more complex and multi-scale lesion features. To further enhance training stability and convergence, batch normalization is integrated after each convolutional layer

making the network more robust to variations in retinal images. The model is trained with a batch size of 32 using the Adam optimizer with a learning rate of 1×10^{-4} and a weight decay of 1×10^{-4} to discourage excessively large weight values and improve generalization.

4.2.2 Attention UNet

The proposed model, Attention UNet, is a modified version of classic UNet that incorporates attention gates to improve segmentation performance. These gates are end-to-end trainable modules that allow the model to focus on relevant regions of the encoder feature maps by assigning contextual weights, improving the precision of segmentation [4]. Unlike traditional UNet, which directly

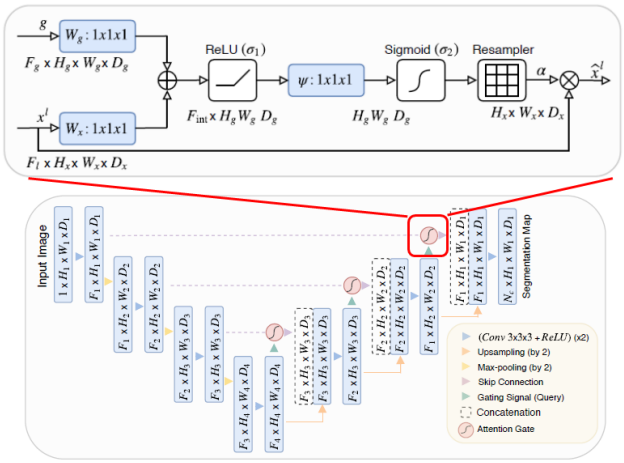

Figure 3: Attention UNet architecture [4]

concatenates feature maps from coarser scales, Attention UNet uses attention gates as dynamic masks on the skip connections between the encoder and decoder. These gates filter feature maps, determining which information should pass through and which should be discarded, as we can see in Fig.3. The attention coefficients, ranging from 0 to 1, highlight the most important regions of the image. In our implementation, the convolutional block uses consecutive 3x3 convolutional layers with Batch Normalization and ReLU activation. The upsampling block uses a scale factor of 2, followed by a 3x3 convolutional layer, Batch Normalization, and ReLU activation. The attention block applies convolutional layers to both the gating signal and encoder feature maps, followed by Batch Normalization and a sigmoid activation to compute the attention map.
The encoder consists of 4 layers, with 2x2 max pooling used to reduce the spatial dimensions. The decoder path includes upsampling blocks followed by attention mechanisms. The model is trained with a batch size of 16 and the same configuration of the optimizer of UNet.

4.2.3 DeepLabV3

The third proposed model is DeepLabV3, which uses ResNet as the backbone and introduces two key innovations: Atrous Convolution (dilated convolutions) and the Atrous Spatial Pyramid Pooling (ASPP) module [11]. While typical pooling or strided convolutions reduce feature resolution, which is detrimental for segmentation, DeepLabV3 uses Atrous Convolution which inserts zeros between filter weights to expand the receptive field without increasing parameters or losing resolution. This allows the model to capture larger areas of the image.
The ASPP module captures multiscale contextual information by applying Atrous Convolutions with varying dilation rates at multiple spatial resolutions, and includes a global average pooling layer to capture broader context from the entire image. The complete architecture is illustrated in Fig.4 in the appendix.
In our approach, we use a modified version of the pre-trained DeepLabV3 model, designed for binary segmentation tasks. The ResNet101 backbone, pre-trained on COCO dataset, is retained, while the original classifier is replaced with a custom one for binary segmentation. The auxiliary classifier is removed and the layers up to the layer4 block are frozen to prevent updates during training. Only layer4 and the classifier are trainable. Sigmoid activation is added to output a binary probability map. The model is then trained with a batch size of 16 and the same optimizer configuration used in UNet.

4.2.4 Swin UNETR

The last model proposed for the segmentation of retinal lesions is the Swin Transformer-based UNEt TRansformer (Swin UNETR). Traditional CNN-based models, such as UNet or DeepLabV3, rely on convolutional operations with limited receptive fields, making it challenging to model long-range dependencies between pixels, which are crucial for segmenting small and irregular lesions. On the other hand, Swin UNETR, built on Swin Transformer blocks, employs self-attention mechanisms that dynamically capture global information, preserving fine details while understanding contextual relationships between distant pixels. Originally designed for 3D medical image segmentation [8], we adopt its 2D variant in this work to segment retinal lesions from fundus images using MONAI, a deep learning framework for medical imaging. Swin UNETR is a hybrid architecture that combines the Swin Transformer encoder with a U-shaped decoder inspired by the traditional UNet, enhanced by transformer-based feature extraction and skip connections. Its architecture can be found in Fig.5 in the appendix.
Swin UNETR processes 2D input patches $X \in \mathbb{R}^{H \times W \times C}$ where $H, W = 512$, $C = 3$, progressively merging

smaller patches instead of using fixed-size partitions like ViTs. The initial patch partition layer divides the image into non-overlapping patches, embedding them into a space of C, resulting in a grid of $\left(\frac{H}{P} \times \frac{W}{P}\right) \times C$ tokens. In our case, $C = 48$ and $P = 4$ (default value). The encoder consists of four hierarchical stages, each with:

- A linear embedding layer that halves spatial dimensions.
- Two Swin Transformer blocks using Window-based Multi-Head Self-Attention (W-MSA) and Shifted Window Multi-Head Self-Attention (SW-MSA).
- A Patch Merging Layer that groups neighboring 2×2 patches, concatenating features into a $4C$-dimensional representation, later reduced to $2C$ for efficiency.

Each Swin Transformer block applies W-MSA inside fixed $M \times M$ windows ($M = 7$), followed by Shifted Window MSA (SW-MSA) in alternate layers, shifting windows by $\lfloor M/2 \rfloor$ pixels to enhance cross-window interaction.
Swin UNETR follows a U-Net architecture, progressively decoding encoder features via skip connections. At each stage $i \in \{0, 1, 2, 3, 4\}$ and bottleneck $i = 5$, feature maps $(\frac{H}{2^i} \times \frac{W}{2^i})$ pass through:

- A residual block with two 3×3 convolutions and instance normalization.
- A deconvolutional layer doubling the resolution.
- A concatenation with previous stage outputs, followed by a refinement residual block.

The final segmentation mask is obtained via a 1×1 convolution and sigmoid activation.
The model is trained with a batch size of 4 and the same optimizer configuration of the other networks.

5. Experiments

This section presents the results obtained from each model, implemented using PyTorch. All experiments are conducted in the Kaggle environment on a P100 GPU with 32 GB of memory and the models have been trained for 20 epochs.

5.1. Metrics

The segmentation task in this study is highly imbalanced, making conventional metrics like accuracy unreliable, as a model predicting mostly background pixels could achieve high accuracy without effectively segmenting lesions. To provide a more meaningful evaluation, the following metrics are considered:

- **Dice Similarity Coefficient (DSC)**, which quantifies the overlap between predicted and ground truth segmentation masks:

$$DSC = \frac{2TP}{2TP + FP + FN} \tag{1}$$

  This metric is well-suited for imbalanced datasets, as it emphasizes correct lesion detection by giving more weight to true positives.

- **AUPR (Area Under the Precision-Recall Curve)**, which evaluates the trade-off between precision and recall across different probability thresholds. Unlike the Area Under the ROC Curve (AUC-ROC), AUPR is more suitable for imbalanced datasets, as it focuses on the model's ability to correctly identify positive instances without being influenced by the abundance of negative samples [12].

5.2. Performance Analysis of UNet with Different Loss Functions

For computational efficiency, the selection of the most suitable loss function has been determined based on the performance achieved with the UNet model. In the table Tab. 1 is possible to see the different loss functions and their impact on segmentation quality. Among the losses tested, Tversky Loss performs poorly. Weighted BCE achieves the highest recall (0.920) and a strong AUC-PR (0.827), ensuring that most lesions are detected. Although its precision (0.499) is lower than Focal Loss, this trade-off is acceptable in medical applications where missing a lesion is far more critical than detecting a false positive. While precision could be improved, as we'll see later in section 5.4, Weighted BCE prioritizes lesion detection, which aligns with the primary goal of medical segmentation: minimizing the risk of missing pathological regions. Therefore, Weighted BCE emerges as the most suitable choice and has been chosen as the standard loss for training the other architectures.

Loss Function	Precision	Recall	Dice	AUC-PR
Weighted BCE	0.499	0.920	0.647	0.827
Focal Loss	0.806	0.675	0.735	0.800
Tversky Loss	0.125	0.875	0.219	0.428

Table 1: Performance comparison of different loss functions for lesion segmentation using the UNet model

5.3. Results of Retinal Lesion Segmentation Models

A comprehensive comparison of the proposed models is presented to assess their performance and highlight the strengths and limitations of each architecture.

Model	Precision	Recall	Dice	AUC-PR
UNet	0.515	0.917	0.660	0.724
Attention UNet	0.593	0.827	0.690	0.725
DeepLabV3	0.495	0.890	0.645	0.710
Swin UNETR	0.573	0.878	0.693	0.738

Number of Trainable Parameters			
UNet	Attention UNet	DeepLabV3	Swin UNETR
31,122,161	2,166,202	31,090,433	25,139,275

From the table, it's evident that the model with the less parameters is Attention UNet and the one with most parameters is UNet. The models generally perform well in the retinal lesion segmentation task, but they all exhibit relatively low precision, indicating a tendency to over-segment and produce false positives. Among them, DeepLabV3 is the worst-performing model, as it is primarily designed for large-scale object segmentation rather than fine-grained medical image analysis. This is primarily due to its architectural design with Atrous Convolutions and lacking mechanisms specifically designed to refine small details like skip connections or attention gates. On the other hand, Swin UNETR emerges as the best-performing model, achieving the highest Dice score (0.693) and AUC-PR (0.738). Its transformer-based architecture effectively captures both local and global features, improving lesion detection and boundary precision. Attention UNet also performs well, enhancing precision while maintaining high recall, making it a strong alternative. UNet, despite achieving the highest recall, suffers from low precision due to over-segmentation. An example of the ground truth and predicted masks can be found in the appendix in Fig.6.

5.4. Negative mask

The previous results indicate that while recall is high, precision remains low. In medical image segmentation, lesions such as hard exudates, hemorrhages, and microaneurysms often appear in close proximity, making it challenging for a model to accurately differentiate between them. To reduce the false positive in regions occupied by other lesions, we have introduced a negative mask to improve the segmentation of hard exudates. This negative mask is constructed by summing the binary masks of hemorrhages, microaneurysms, and soft exudates, ensuring that any pixel occupied by these lesions is assigned a value of 1. A penalty term is added to the loss function to discourage predictions in these regions. The penalty is computed as:

$$\text{Penalty} = \alpha \cdot \text{mean}\left(\sigma(y_{\text{pred}}) \cdot \text{negative_mask}\right) \quad (2)$$

where $\sigma(y_{\text{pred}})$ represents the sigmoid output of the model, and α controls the penalty strength and has been set equal to 5. The results of the proposed models trained minimizing this customized loss function are listed below.

Model	Precision	Recall	Dice	AUC-PR
UNet	0.627	0.849	0.720	0.730
Attention UNet	0.623	0.880	0.729	0.728
DeepLabV3	0.540	0.865	0.670	0.718
Swin UNETR	0.558	0.872	0.681	0.734

Table 2: Comparison of segmentation models with the negative mask approach

The negative mask approach effectively reduces false positives, leading to improved precision and Dice scores, particularly for UNet and Attention UNet. DeepLabV3 also benefits, but remains the weakest model. Swin UNETR, which already performed well, sees a slight decline in performance. This may be due to the fact that this model already captures global and local context effectively, making the additional penalty overly restrictive.

6. Conclusion

The results of this study demonstrate that the proposed models achieve good performance in the segmentation of hard exudates in retinal fundus images. Among them, Swin UNETR outperforms the others, leveraging its transformer-based architecture to effectively capture both local and global contextual information. Additionally, the introduction of the negative mask approach significantly improves precision, particularly for models like UNet and Attention UNet, reducing false positives in regions occupied by other lesions. Despite these improvements, there is still room for enhancement, as low precision and over-segmentation remain key challenges. Future advancements of this project could explore advanced augmentation techniques, such as GAN-generated synthetic data, and focus on fine-tuning Swin UNETR's parameters. Moreover, while the models perform well, they do not reach state-of-the-art performance, which for hard exudate segmentation typically exceeds a Dice score of 0.80. This limitation is largely due to computational constraints and time restrictions, which limited training to only 20 epochs. Given more computational power and training time, it is likely that further improvements could be achieved, leading to better lesion segmentation accuracy and more reliable clinical applications.

Overall, this study highlights the potential of deep learning models for automated retinal lesion segmentation while emphasizing the importance of continued improvements to achieve clinically reliable performance.

References

[1] R. Taylor and D. Batey, "Handbook of retinal screening in diabetes: Diagnosis and management," 2012. Second ed. John Wiley Sons, Ltd Wiley-Blackwell.

[2] W. L. Alyoubi, W. M. Shalash, and M. F. Abulkhair, "Diabetic retinopathy detection through deep learning techniques: A review," *Informatics in Medicine Unlocked*, vol. 20, 2020.

[3] O. Ronneberger, P. Fischer, and T. Brox, "U-net: Convolutional networks for biomedical image segmentation," *CoRR*, 2015.

[4] O. Oktay, J. Schlemper, L. Le Folgoc, M. Lee, M. Heinrich, K. Misawa, K. Mori, S. McDonagh, N. Y. Hammerla, B. Kainz, B. Glocker, and D. Rueckert, "Attention u-net: Learning where to look for the pancreas," *1st Conference on Medical Imaging with Deep Learning (MIDL 2018), Amsterdam, The Netherlands*, 2018.

[5] Q. Wei, X. Li, W. Yu, X. Zhang, Y. Zhang, B. Hu, B. Mo, D. Gong, N. Chen, D. Ding, and Y. Chen, "Learn to segment retinal lesions and beyond," 2020.

[6] P. Porwal, S. Pachade, M. Kokare, G. Deshmukh, J. Son, W. Bae, L. Liu, J. Wang, X. Liu, L. Gao, T. Wu, J. Xiao, F. Wang, B. Yin, Y. Wang, G. Danala, L. He, Y. H. Choi, Y. C. Lee, S.-H. Jung, Z. Li, X. Sui, J. Wu, X. Li, T. Zhou, J. Toth, A. Baran, A. Kori, S. S. Chennamsetty, M. Safwan, V. Alex, X. Lyu, L. Cheng, Q. Chu, P. Li, X. Ji, S. Zhang, Y. Shen, L. Dai, O. Saha, R. Sathish, T. Melo, T. Araújo, B. Harangi, B. Sheng, R. Fang, D. Sheet, A. Hajdu, Y. Zheng, A. M. Mendonça, S. Zhang, A. Campilho, B. Zheng, D. Shen, L. Giancardo, G. Quellec, and F. Mériaudeau, "Idrid: Diabetic retinopathy – segmentation and grading challenge," *Medical Image Analysis*, vol. 59, 2020.

[7] C. Lam, C. Yu, L. Huang, and D. Rubin, "Retinal lesion detection with deep learning using image patches," *Invest Ophthalmol Vis Sci*, 2018.

[8] A. Hatamizadeh, V. Nath, Y. Tang, D. Yang, H. Roth, and D. Xu, "Swin unetr: Swin transformers for semantic segmentation of brain tumors in mri images," 2022.

[9] T.-Y. Lin, P. Goyal, R. Girshick, K. He, and P. Dollár, "Focal loss for dense object detection," 2018.

[10] S. S. M. Salehi, D. Erdogmus, and A. Gholipour, "Tversky loss function for image segmentation using 3d fully convolutional deep networks," 2017.

[11] L.-C. Chen, G. Papandreou, F. Schroff, and H. Adam, "Rethinking atrous convolution for semantic image segmentation," *Google Inc.*, 2017.

[12] T. Saito and M. Rehmsmeier, "The precision-recall plot is more informative than the roc plot when evaluating binary classifiers on imbalanced datasets," March 2015.

A. APPENDIX

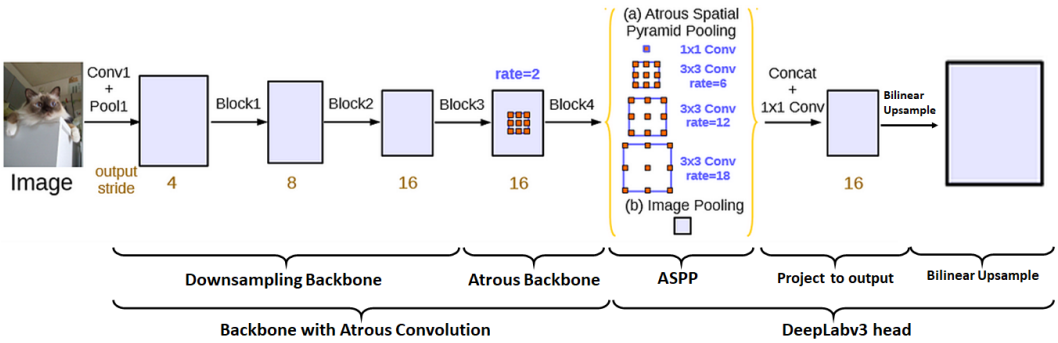

Figure 4: DeepLabV3 architecture [11]

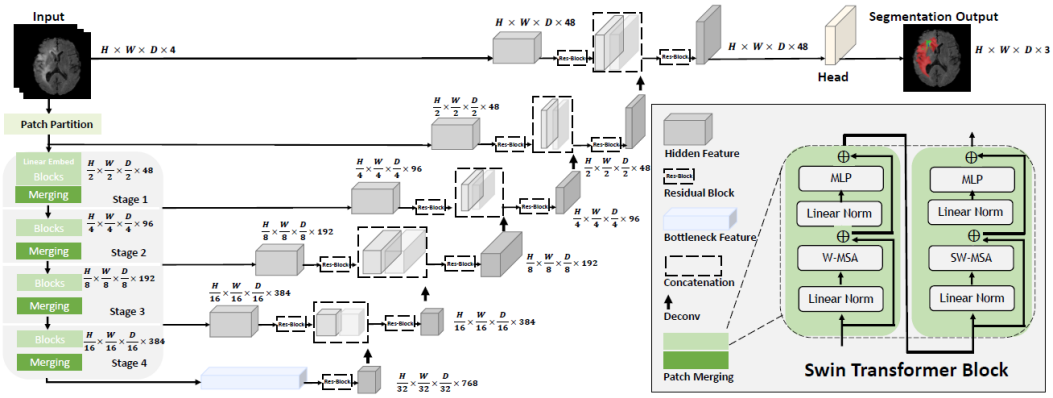

Figure 5: Swin UNETR architecture with 3D inputs [8]

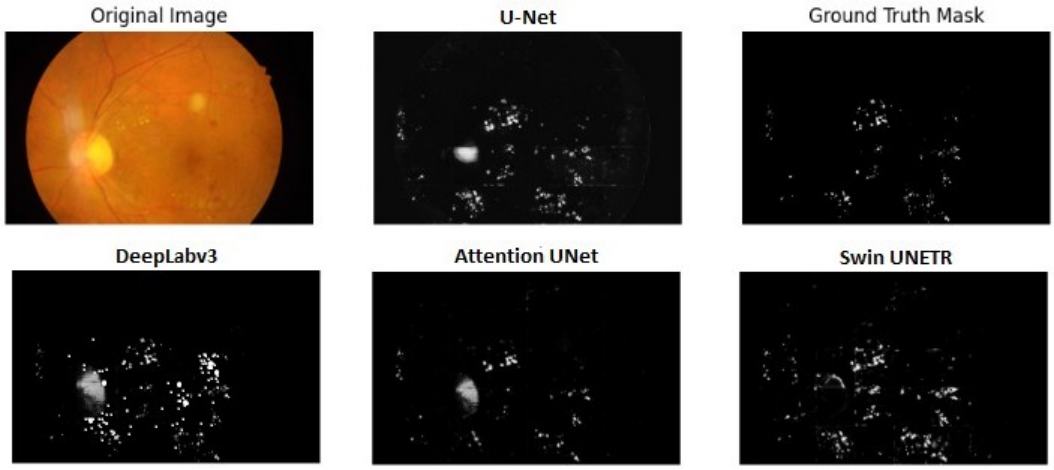

Figure 6: Ground truth and predicted masks for an IDRiD test image