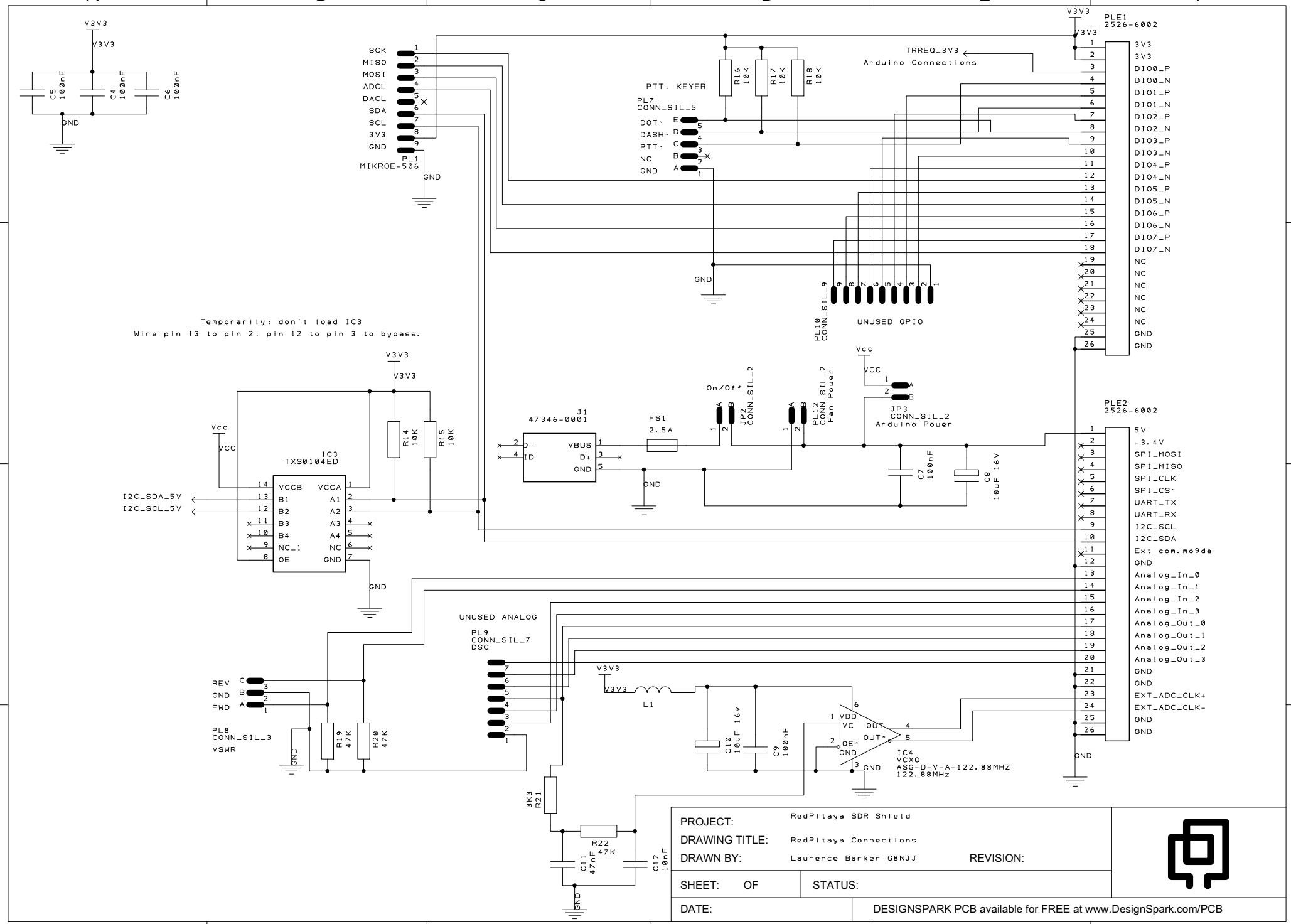
A
B
C
D
E
F
1
2
3
4
V3V3
C5 100nF
C4 100nF
C6 100nF
GND
SCK
MISO
MOSI
ADCL
DACL
SDA
SCL
3V3
GND
PL1
MIKROE-506
PTT, KEYER
PL7
CONN_SIL_5
DOT-
DASH-
PTT-
NC
GND
R16 10K
R17 10K
R18 10K
TRREQ_3V3
Arduino Connections
PLE1
2526-6002
3V3
3V3
DIO0_P
DIO0_N
DIO1_P
DIO1_N
DIO2_P
DIO2_N
DIO3_P
DIO3_N
DIO4_P
DIO4_N
DIO5_P
DIO5_N
DIO6_P
DIO6_N
DIO7_P
DIO7_N
NC
NC
NC
NC
NC
NC
GND
GND
PL10
CONN_SIL_9
UNUSED GPIO
Temporarily: don't load IC3
Wire pin 13 to pin 2, pin 12 to pin 3 to bypass.
IC3
TXS0104ED
VCCB
VCCA
B1
A1
B2
A2
B3
A3
B4
A4
NC_1
NC
OE
GND
Vcc
VCC
R14 10K
R15 10K
I2C_SDA_5V
I2C_SCL_5V
J1
47346-0001
VBUS
D+
D-
ID
GND
FS1
2.5A
On/Off
JP2
CONN_SIL_2
PL12
CONN_SIL_2
Fan Power
JP3
CONN_SIL_2
Arduino Power
C7 100nF
C8 10uF 16V
PLE2
2526-6002
5V
-3.4V
SPI_MOSI
SPI_MISO
SPI_CLK
SPI_CS-
UART_TX
UART_RX
I2C_SCL
I2C_SDA
Ext com.mo9de
GND
Analog_In_0
Analog_In_1
Analog_In_2
Analog_In_3
Analog_Out_0
Analog_Out_1
Analog_Out_2
Analog_Out_3
GND
GND
EXT_ADC_CLK+
EXT_ADC_CLK-
GND
GND
UNUSED ANALOG
PL9
CONN_SIL_7
DSC
REV
GND
FWD
PL8
CONN_SIL_3
VSWR
R19 47K
R20 47K
L1
C10 10uF 16v
C9 100nF
VDD
VC
OE-
GND
OUT
OUT-
IC4
VCXO
ASG-D-V-A-122.88MHZ
122.88MHz
3K3
R21
R22 47K
C11 47nF
C12 10nF
PROJECT: RedPitaya SDR Shield
DRAWING TITLE: RedPitaya Connections
DRAWN BY: Laurence Barker G8NJJ
REVISION:
SHEET: OF
STATUS:
DATE:
DESIGNSPARK PCB available for FREE at www.DesignSpark.com/PCB

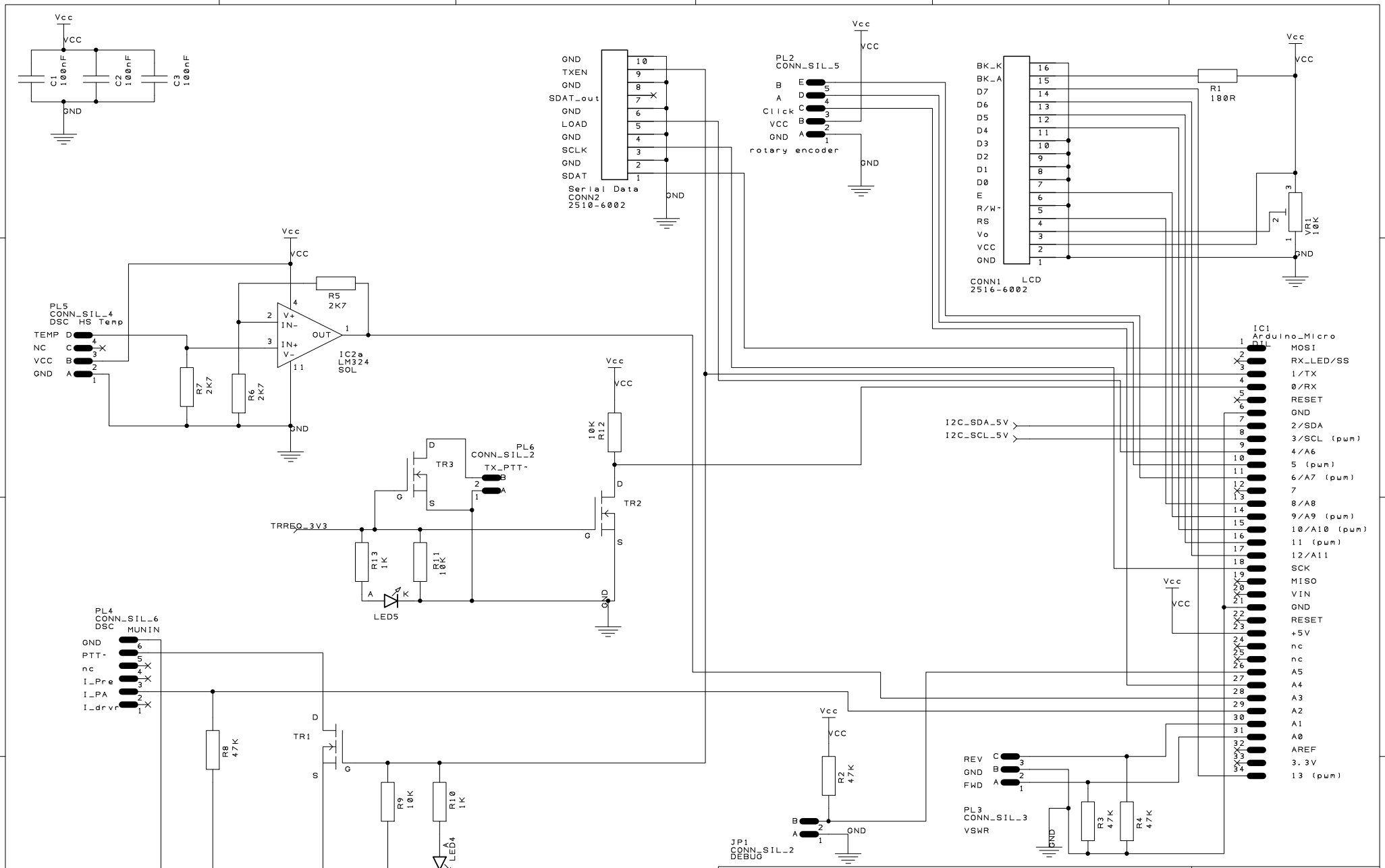

PROJECT:	RedPitaya SDR Shield
DRAWING TITLE:	Arduino Micro Connections
DRAWN BY:	Laurence Barker G8NJJ
REVISION:	
SHEET: OF	STATUS:
DATE:	DESIGNSPARK PCB available for FREE at www.DesignSpark.com/PCB