LOW-POWER MASTER-SLAVE D FLIP-FLOP DESIGN USING GATE DIFFUSION INPUT (GDI)

Overview

- CMOS Technology
- Master-Slave D Flip-Flop
- CMOS Logic Design
- CMOS Simulation
- CMOS Layout
- GDI Logic Design
- GDI Simulation
- GDI Layout
- D Flip-Flop in CMOS vs GDI
- Conclusion & References

CMOS TECHNOLOGY

- Technology: PTM High Performance 16nm
- Key specifications:
- Strained-Si for enhanced mobility
- Nominal VDD = 0.7V
- lambda (λ) = 8nm
- Gate oxide: 3.1nm (NMOS), 1nm (PMOS)
- Threshold voltages: 0.48V (NMOS), -0.43V (PMOS)
- Advanced features: Level 54 BSIM model

MASTER-SLAVE D FLIP-FLOP

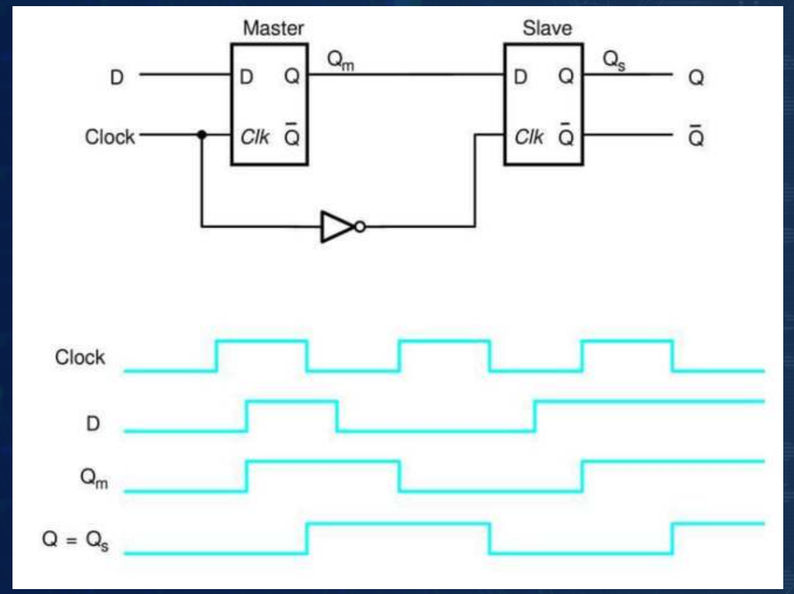

A Master-Slave D Flip-Flop is a type of edge-triggered flip-flop built using two D latches connected in series:

✦ Structure:
- Master latch: Active when CLK = 0.
- Slave latch: Active when CLK = 1.

✦ Working Principle:
- When CLK = 0, the master latch is active and it captures input D.
- When CLK rises to 1, the slave becomes active and captures the master's output.
- This design samples D only on the rising edge of the clock, ensuring a positive edge-triggered output.

CMOS BASED DESIGN & SCHEMATICS

- Built using CMOS based D latches (Master-Slave)
- Total: 24 transistors (22 logic + 2 for CLK-bar)
- Edge-triggered by using CLK and CLK-bar
- High noise margin, full swing, and robust operation
- Larger area and power compared to GDI

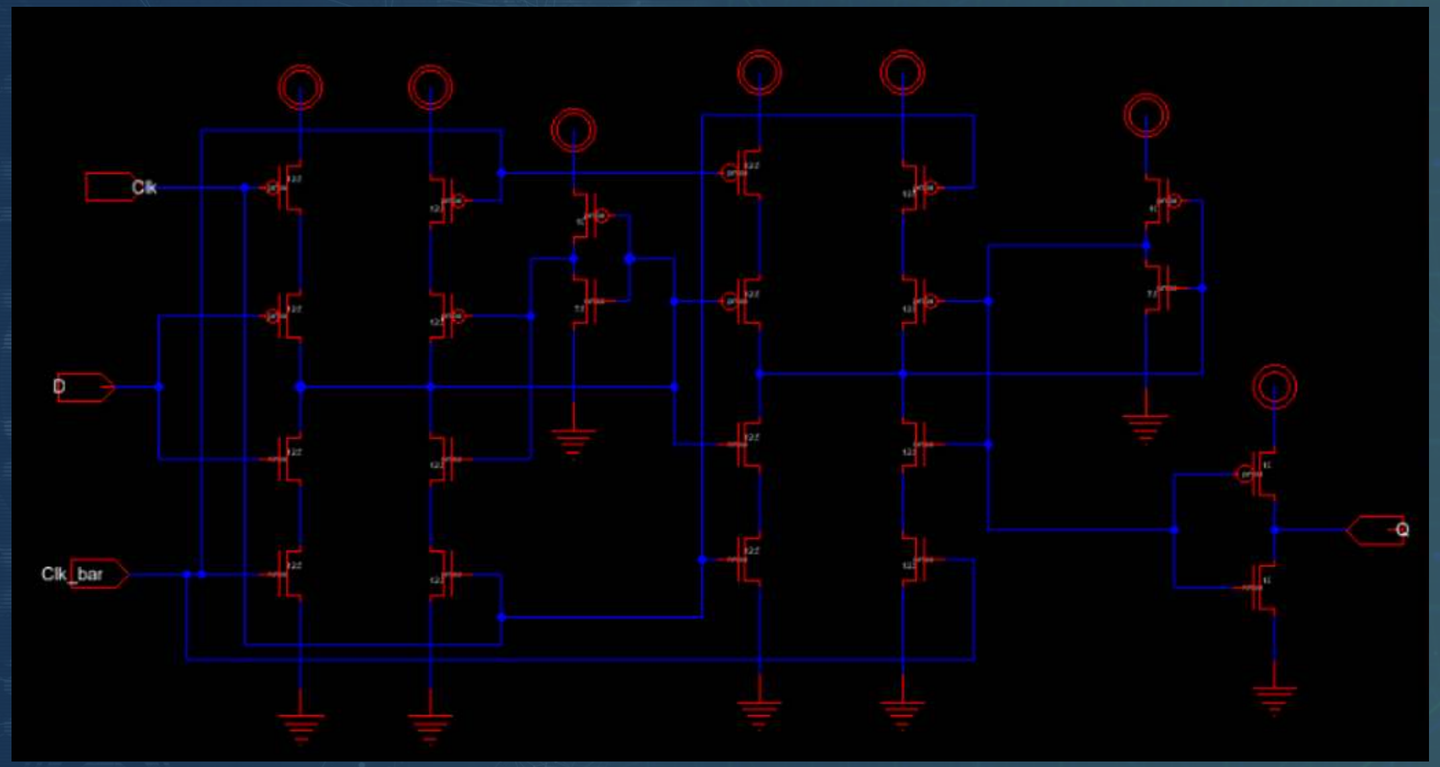

CMOS SIMULATION

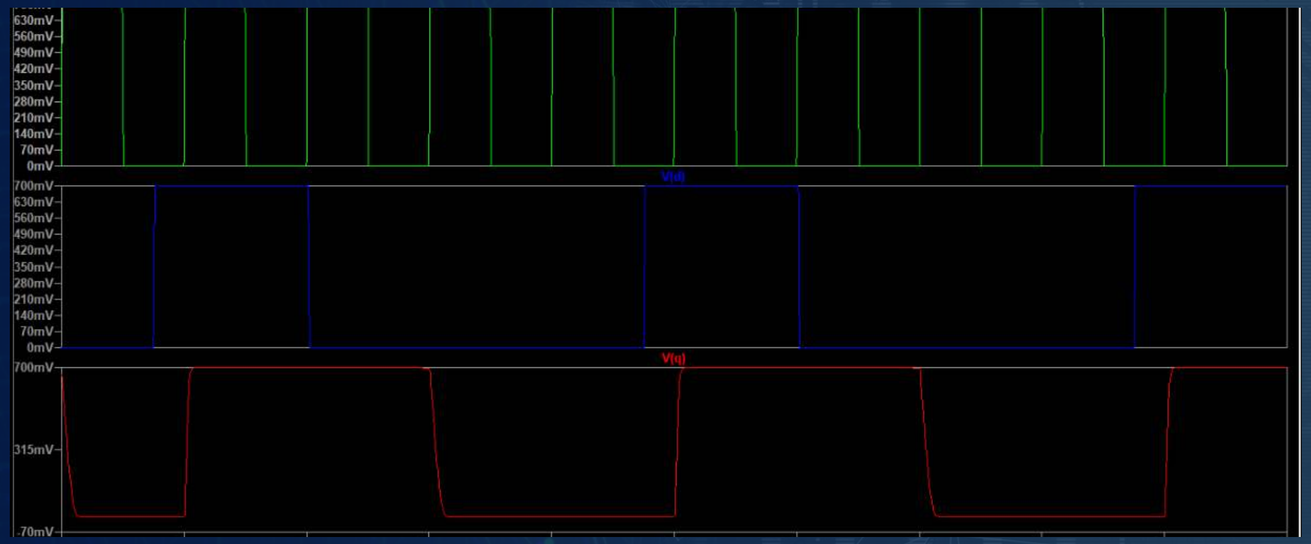

This simulation validates the positive-edge behavior of the GDI D Flip-Flop.

Propagation Delay

- tpLH = 3.7×10^{-10} = 370 ps
- tpHL = 4.3×10^{-10} = 430 ps

Rising & Falling Time

- Rise time = 4×10^{-10} = 400 ps
- Fall time: = 3.95×10^{-10} = 395 ps

Power =275 nW

Output voltage swing confirmed: 0V to 0.7V (full swing).

CMOS LAYOUT

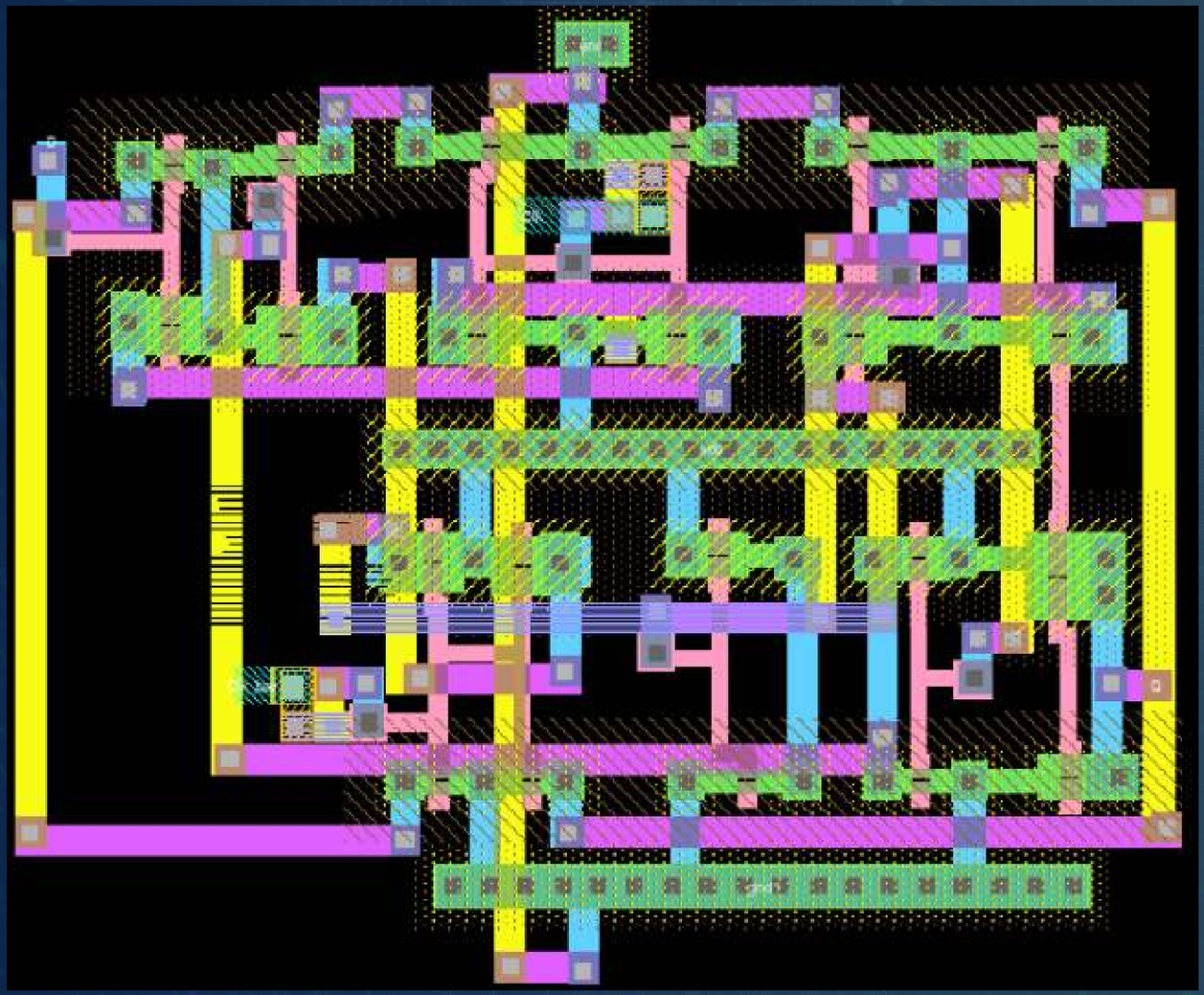

Area in terms of lambda λ
$=162.5 \times 138.5\ \lambda^2$
$=1.4404\ pm^2$
$=1440.4\ fm^2$

CMOS LAYOUT SIMULATION

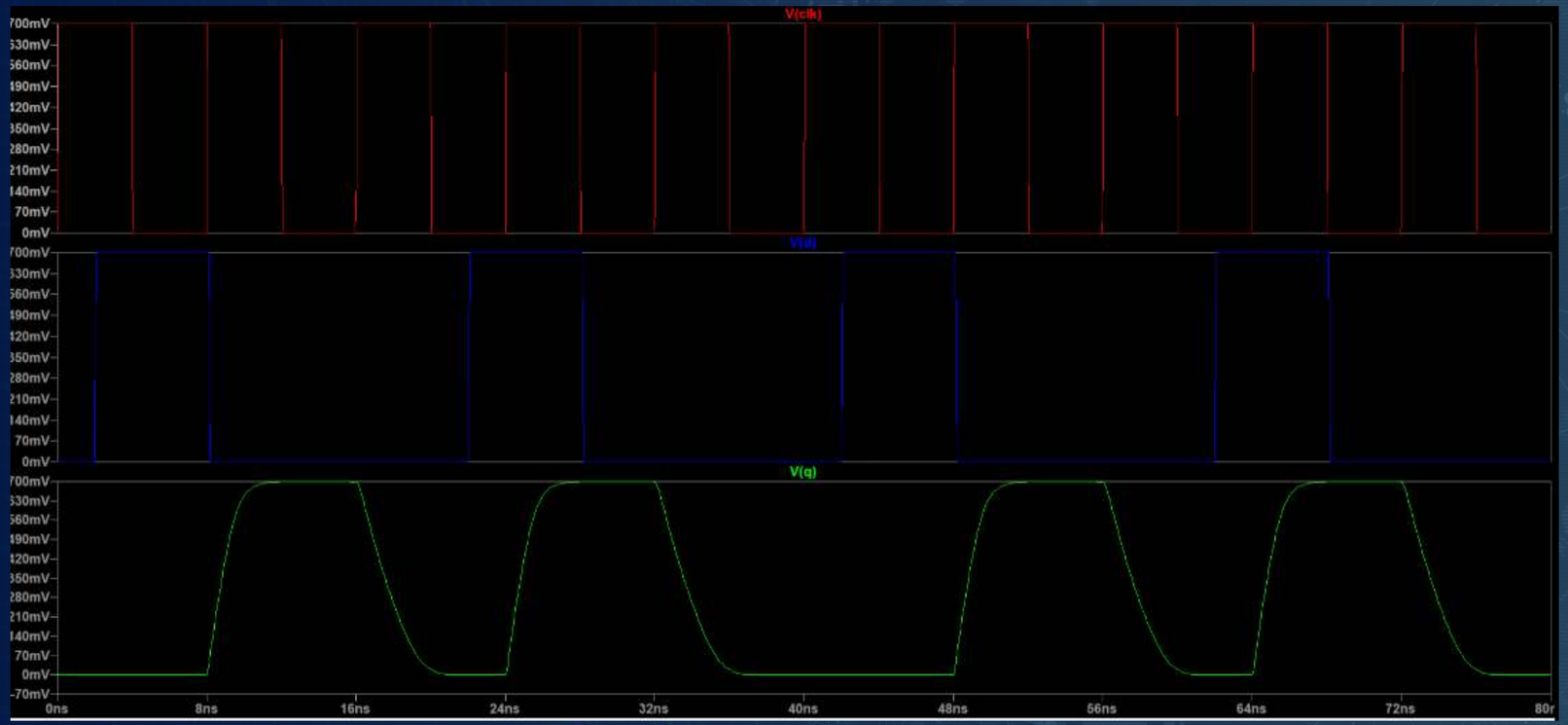

This simulation validates the positive-edge behavior of the GDI D Flip-Flop.

Propagation Delay

- tpd = 5.25×10^{-10} = 525 ps

Output voltage swing confirmed: 0V to 0.7V (almost full swing).

GDI BASED DESIGN

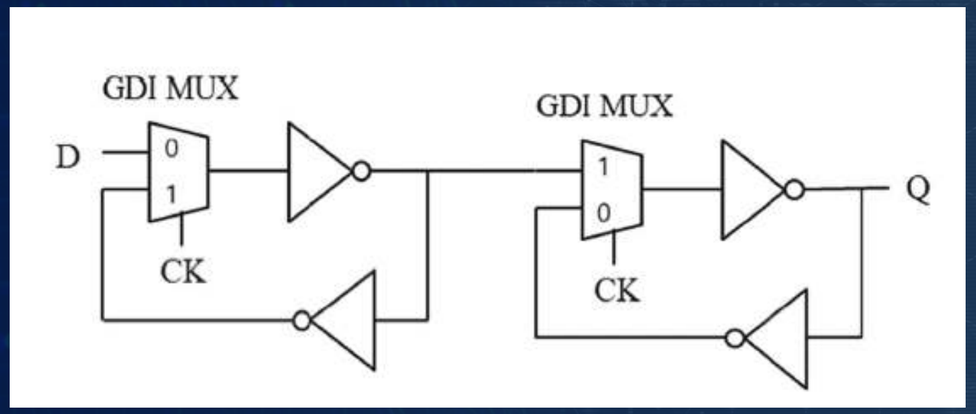

- Uses 2 GDI MUX cells + 2 inverters
- Total: Only 12 transistors
- Operates on positive clock edge
- MUX handles data gating, inverter restores full swing
- No need for CLKB (clock-bar) → simplifies design
- Ideal for RTL integration

GDI SCHEMATICS

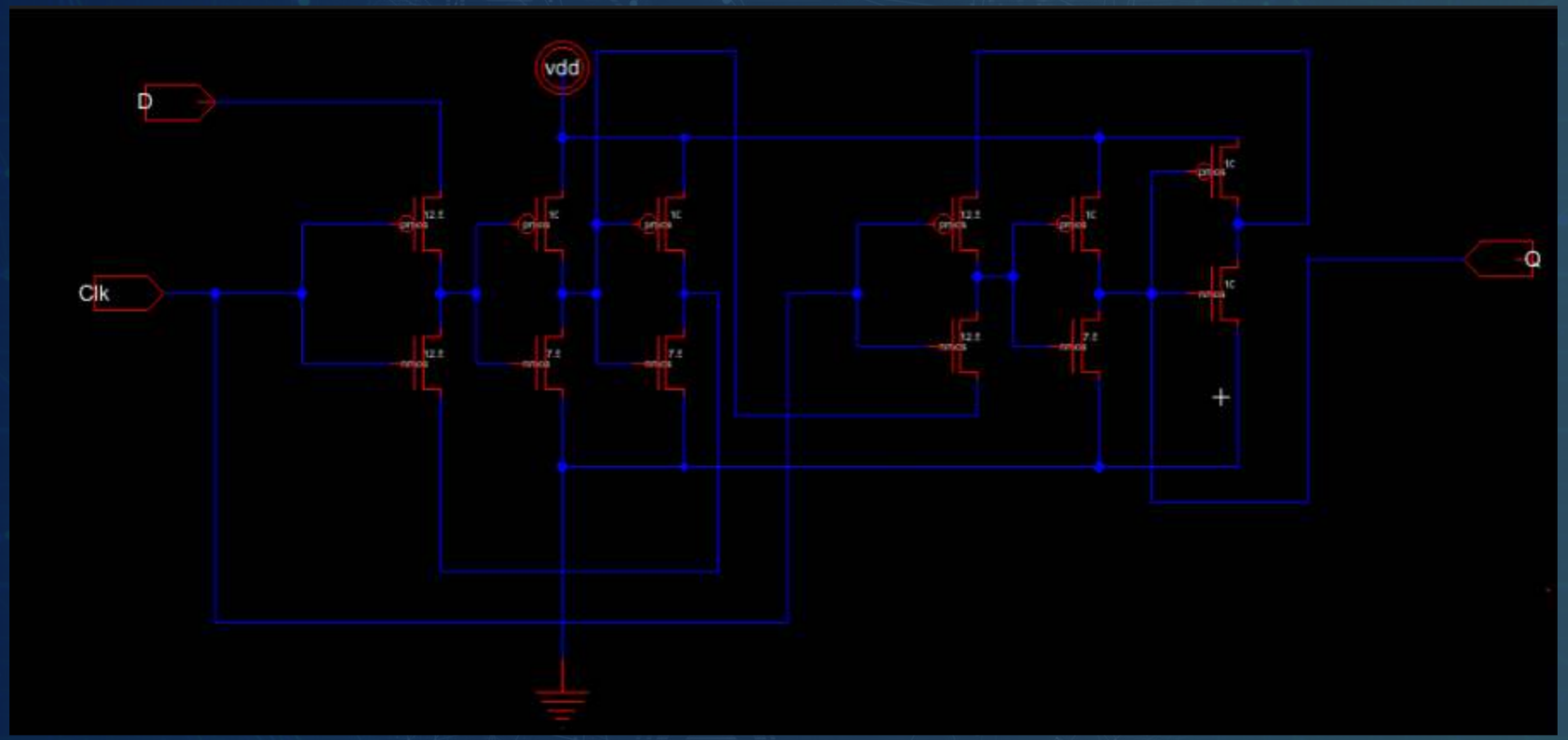

- Total: Only 12 transistors
- 12 transistor reduced

GDI SIMULATION

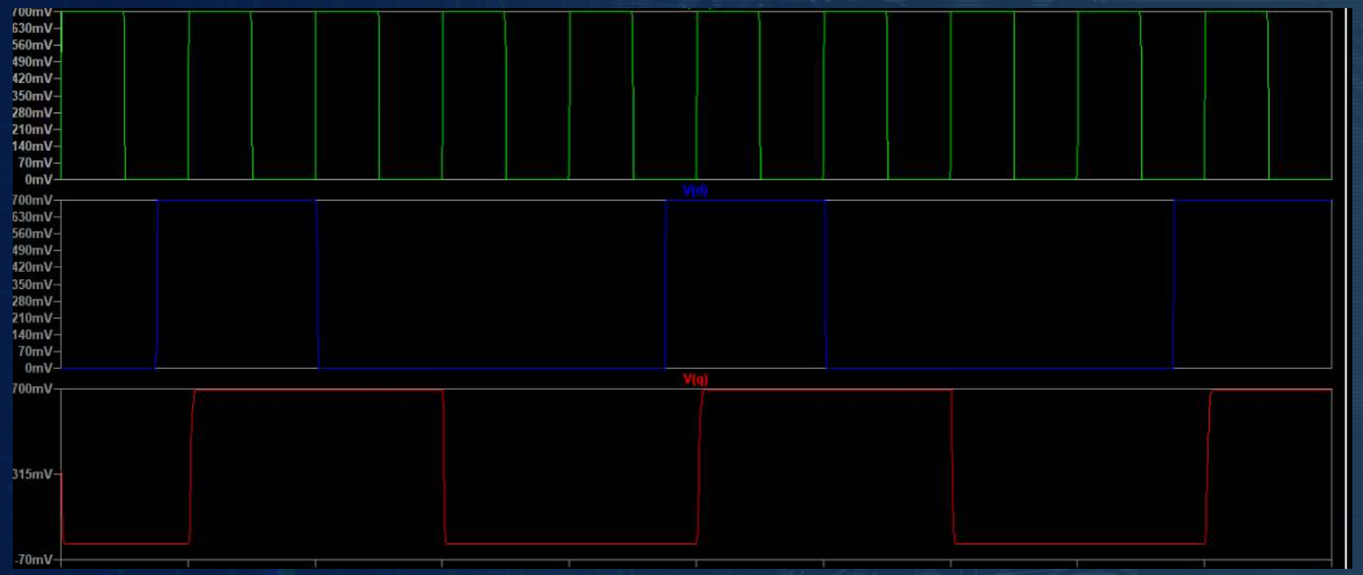

This simulation validates the positive-edge behavior of the GDI D Flip-Flop.

Propagation Delay

- tpLH = 1.29×10^{-10} = 129 ps
- tpHL = 1.33×10^{-10} = 133 ps

Rising & Falling Time

- Rise time = 1.21×10^{-10} = 121 ps
- Fall time: = 1.3×10^{-10} = 130 ps

Power =53.7 nW

Output voltage swing confirmed: 0V to 0.7V (full swing).

GDI LAYOUT BEFORE IMPROVMENTS

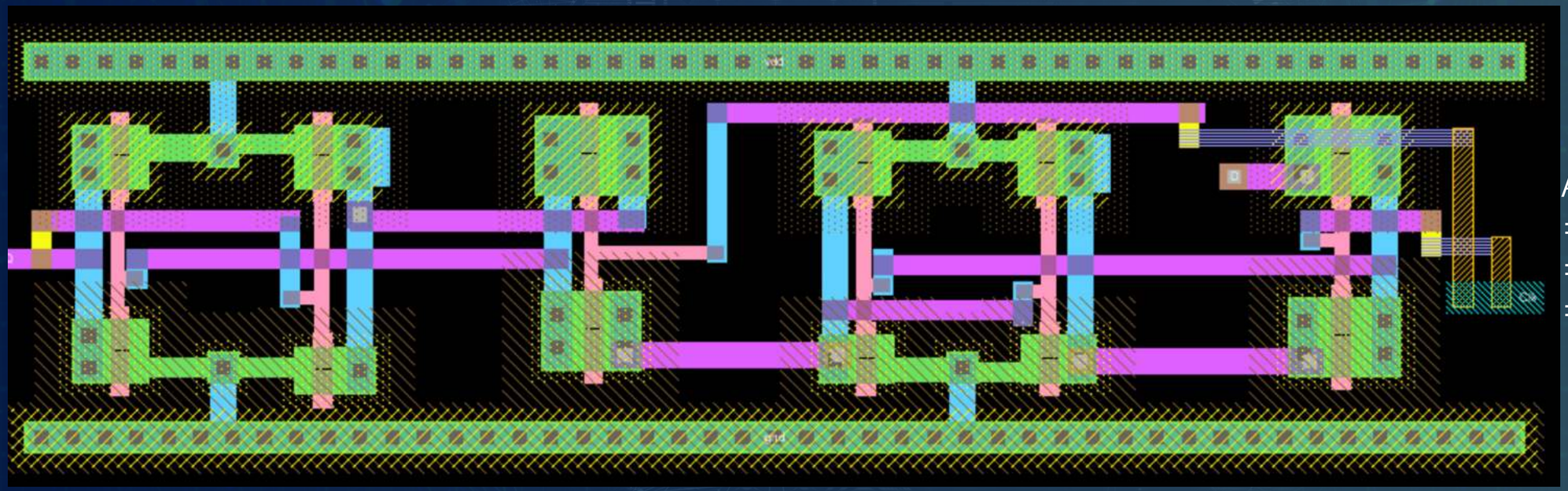

Area in terms of lambda
$= 247 \times 93\ \lambda^2$
$= 1.4701\ pm^2$
$= 1470.1\ fm^2$

GDI LAYOUT

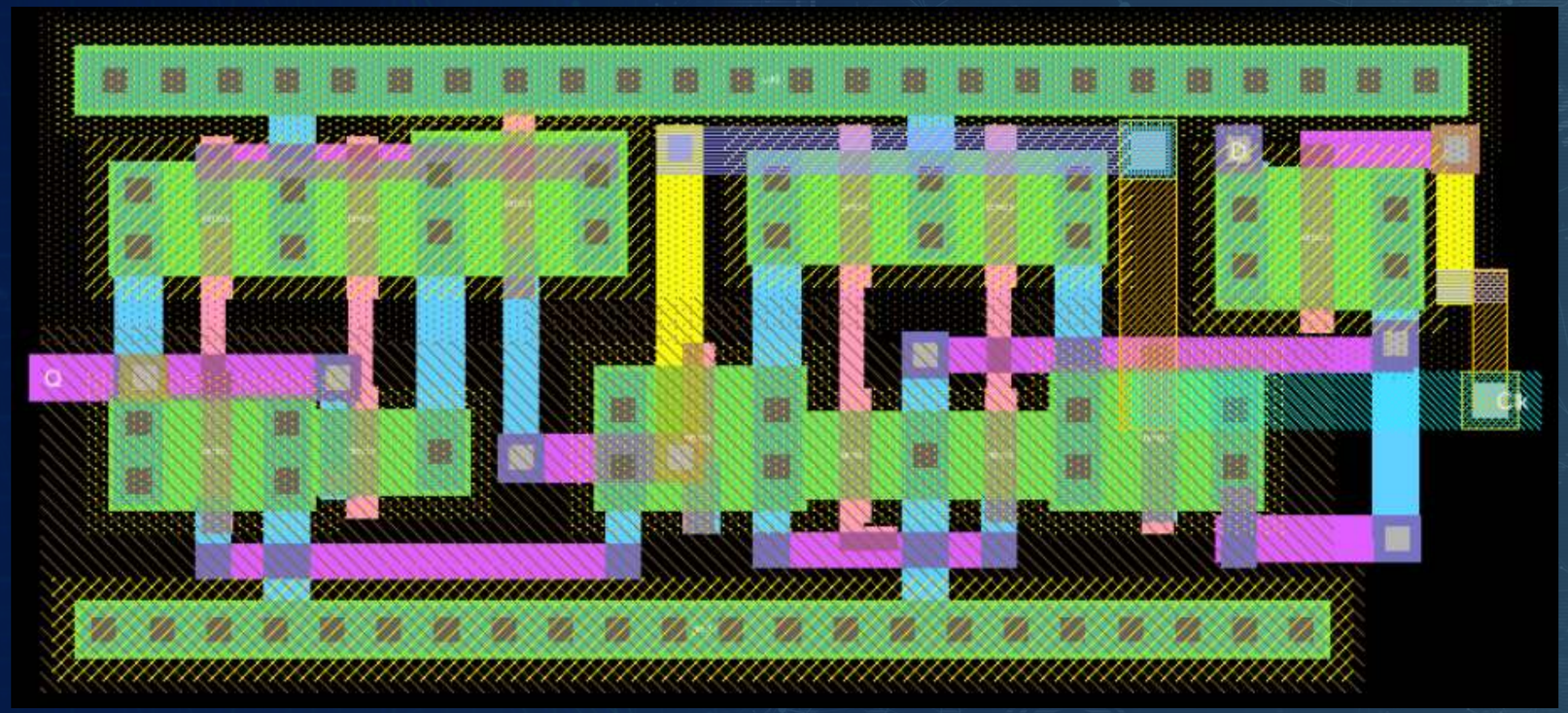

Area in terms of lambda λ
$= 134.5 \times 65.5\ \lambda^2$
$= 0.56382\ pm^2$
$= 563.82\ fm^2$

GDI LAYOUT DISCUSSION

Layout Optimization & Verification:

- Initial GDI layout built naïvely, then optimized:
  - Diffusion sharing between adjacent transistors
  - Shared VDD and GND rails
- Metal layer usage:
  - 6 metal layers used
  - Odd metals (M1/M3/M5): vertical routing
  - Even metals (M2/M4/M6): horizontal routing
- Verification steps:
  - Design Rule Check (DRC) performed to ensure manufacturability
  - Layout vs. Schematic (LVS) passed to confirm functional correctness

VERIFICATION OF USING VERTICAL & HORIZONTAL ROUTING

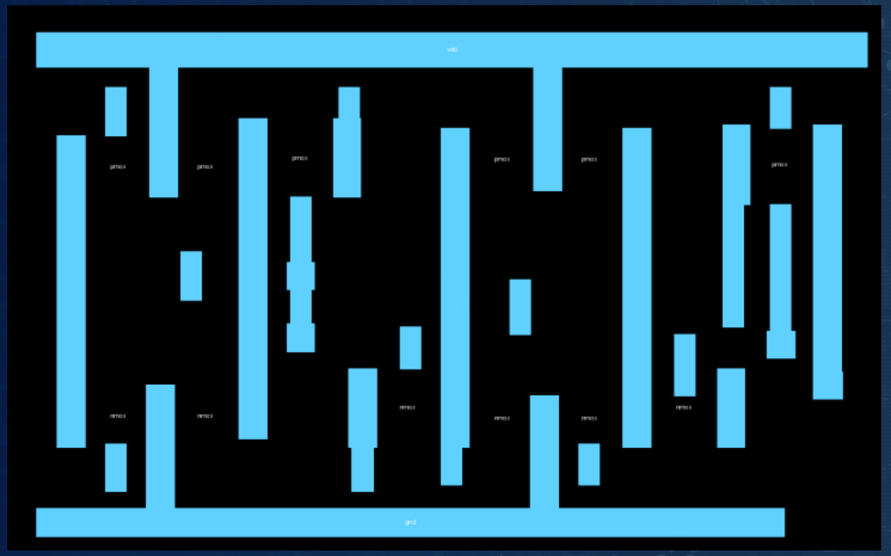

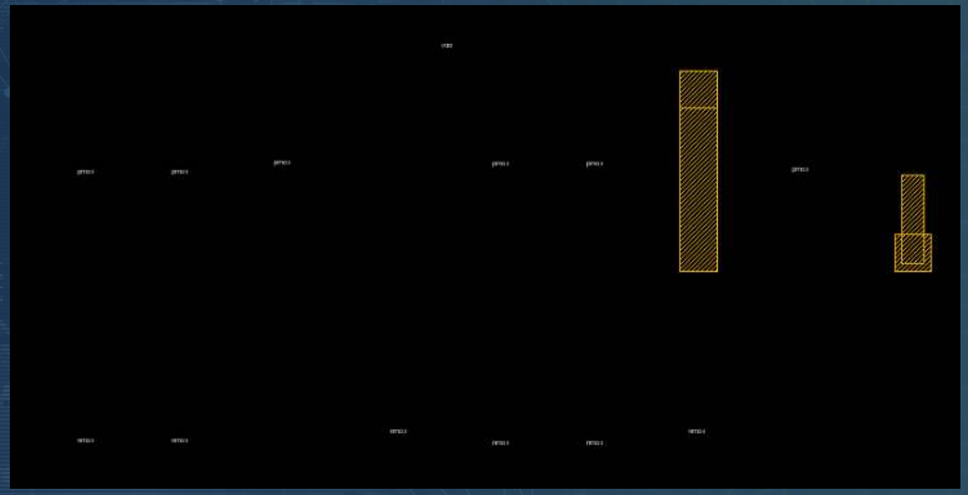

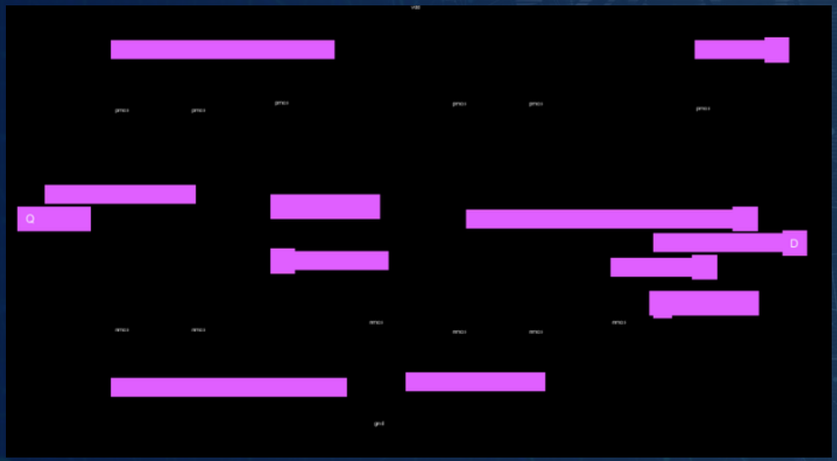

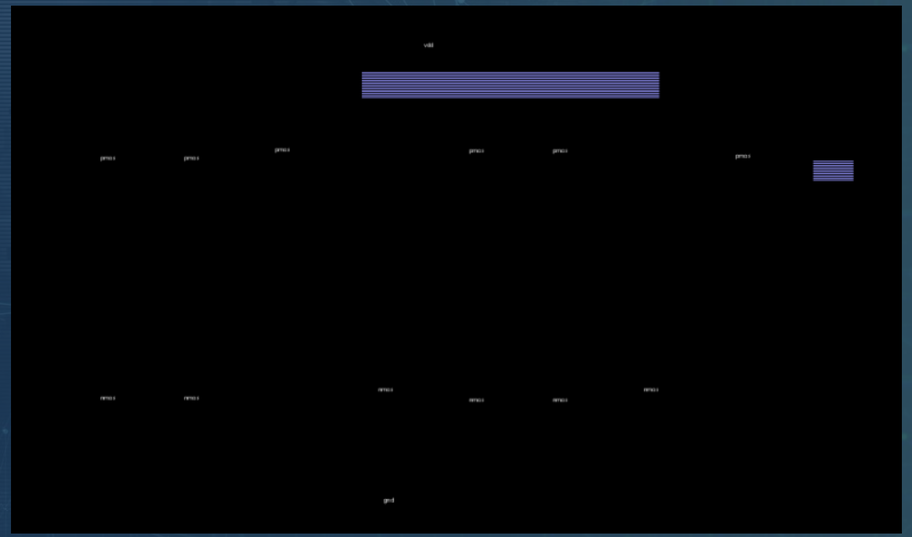

GDI LAYOUT SIMULATION

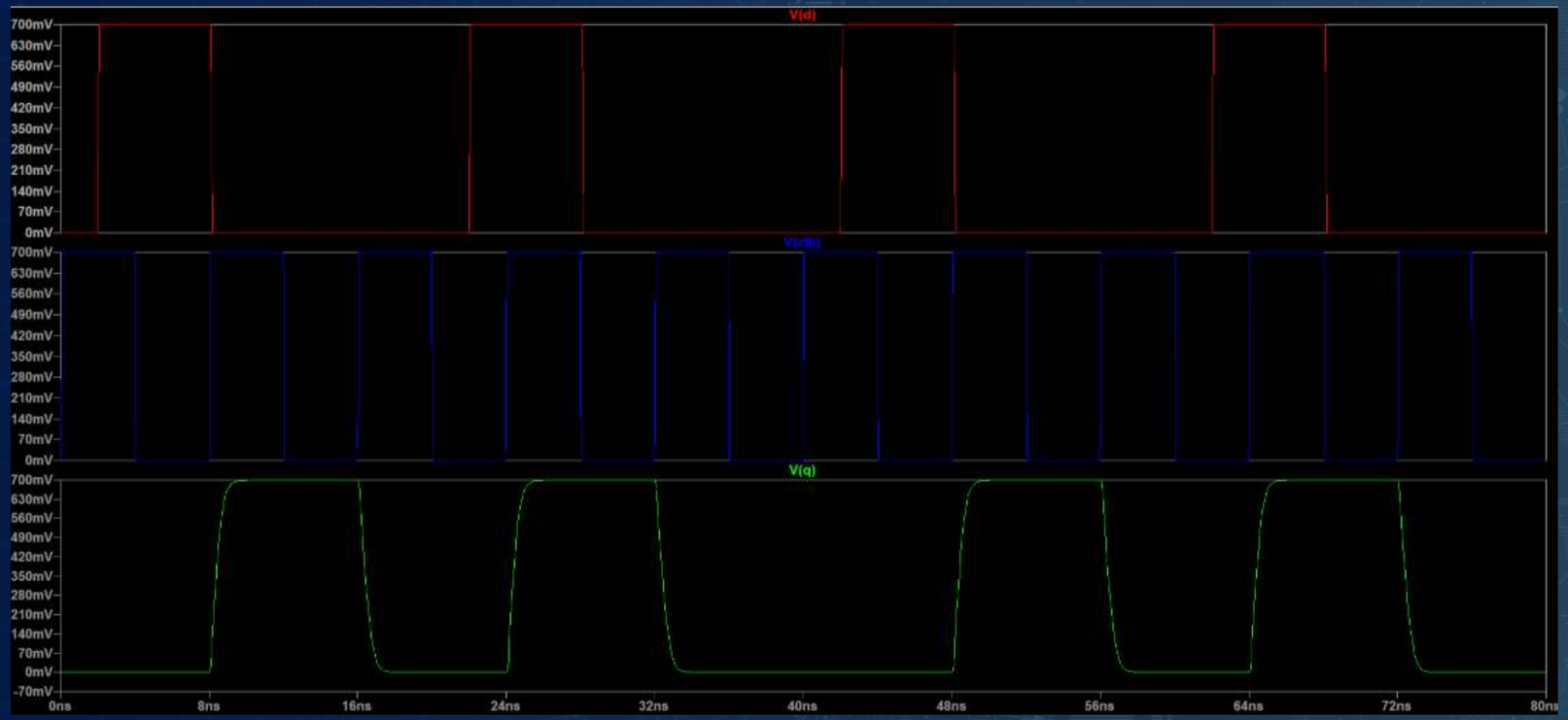

This simulation validates the positive-edge behavior of the GDI D Flip-Flop.

Propagation Delay

- tpd = 2.11×10^{-10} = 211 ps

Output voltage swing confirmed: 0V to 0.7V (almost full swing).

COMPARISON GDI VS CMOS

	CMOS	GDI	IMPROVMENT
TRAN. COUNT	24	12	50%
RISE TIME	4×10^{-10}	1.21×10^{-10}	69.66%
FALL TIME	3.9×10^{-10}	1.3×10^{-10}	66.67%
PROPAGATION DELAY	3.95×10^{-10}	1.31×10^{-10}	68.18%
POWER	275 nW	53.7 nW	80.47%
LAYOUT AREA	1440.4 pm^2	563.82 fm^2	60.95%
Layout Complexity	more	less	

CONCLUSION

- Master-slave D flip-flop ensures reliable edge-triggered operation.
- GDI reduces transistors count, power, delay, area and complexity.
- GDI is excellent for low-power, high-speed applications.
- For 16nm technology, the combination of master-slave D flip-flops with GDI logic represents an optimal solution for High-performance processors requiring reliable clocking with minimal power overhead

THANK YOU!

For further reading and in-depth analysis, including circuit schematics, layout comparisons, and simulation results, you can refer to our paper

Done by Labiba Sharia, Joud Thaher, and Layan Salem