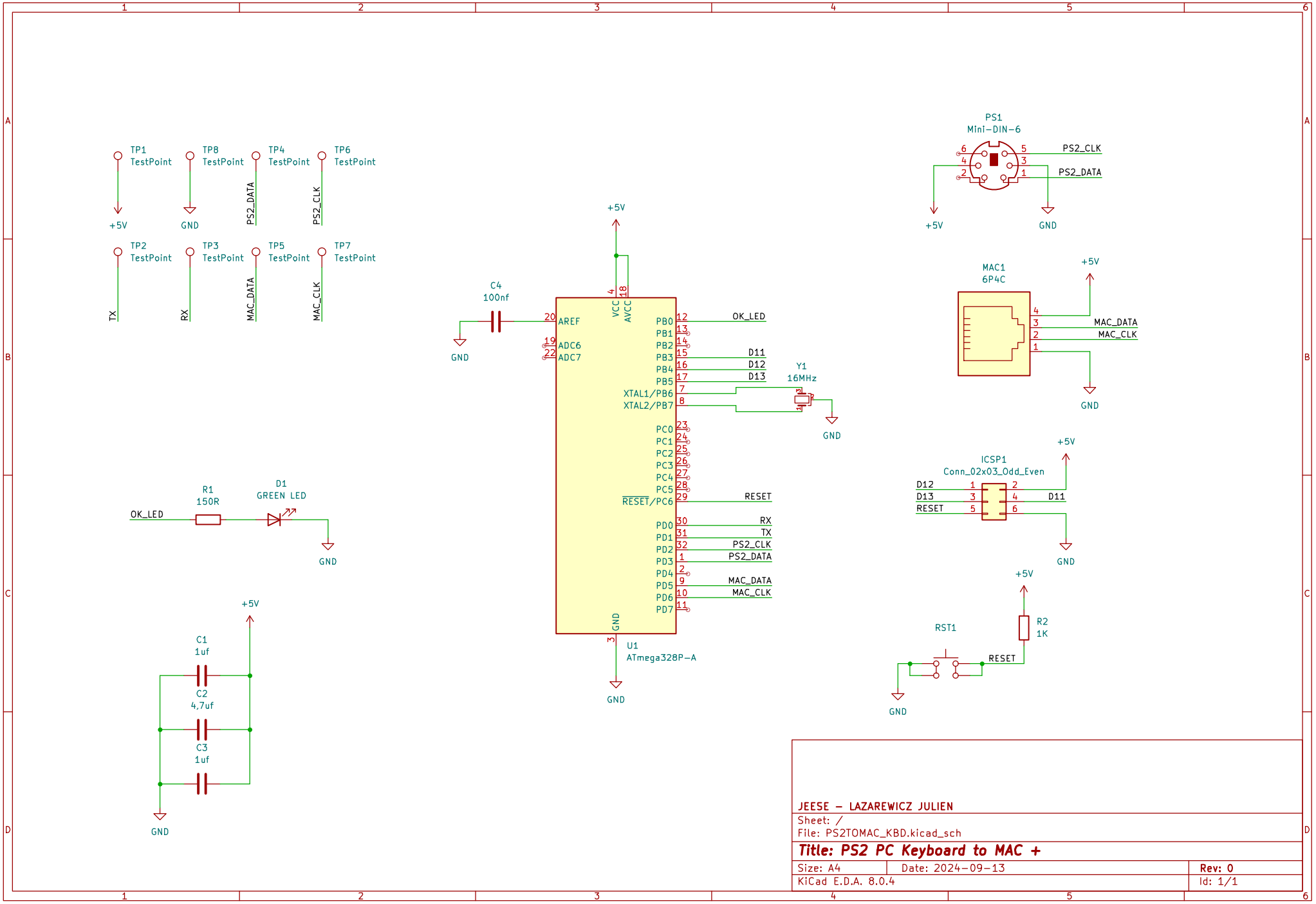

JEESE – LAZAREWICZ JULIEN

Sheet: /

File: PS2TOMAC_KBD.kicad_sch

Title: PS2 PC Keyboard to MAC +

Size: A4	Date: 2024-09-13	Rev: 0
KiCad E.D.A. 8.0.4		Id: 1/1