Part-A

1. Characteristics of IoT

- **Connectivity** - Things are connected to the internet and to each other.
- **Intelligence** - IoT systems have embedded intelligence for decision making.
- **Scalability** - Can scale to accommodate more devices without redesign.
- **Dynamic Nature** - Devices can join or leave the network dynamically.
- **Heterogeneity** - Supports diverse hardware, OS, and networks.
- **Safety & Security** - Data integrity and device security are built in.
- **Self-Configuring** - Devices configure themselves upon joining the network.

---

2. IoT systems are self-adapting and self-configuring. Justify your answer.

Self-Configuring: When a new IoT device (e.g., a smart bulb) is added to a network, it automatically discovers the network, authenticates, and downloads required firmware - without manual setup.

Self-Adapting: IoT systems adjust their behavior based on changing environmental conditions. For example, a smart HVAC system senses rising temperature and automatically increases cooling without human intervention.

These properties make IoT systems autonomous and scalable for large deployments.

---

3. Real-time examples of IoT systems (6 examples)

1. Smart Home (Alexa controlling lights and thermostat)
2. Wearable Health Monitors (Fitbit tracking heart rate)
3. Smart Agriculture (soil moisture sensors automating irrigation)
4. Connected Vehicles (GPS and engine diagnostics)
5. Industrial Automation (factory floor sensors monitoring machines)
6. Smart Grid (electricity meters reporting real-time usage)

---

4. Role of controller service in IoT system

The **Controller Service** acts as the central coordinator between IoT devices and the cloud/application layer. It:

- Receives data from sensing devices.
- Processes and routes data to appropriate services or cloud platforms.
- Sends control commands back to actuators.
- Manages device authentication and session handling.

Example: In a smart home, the controller service receives sensor data and triggers the actuator (fan/AC) based on defined rules.

---

5. Various output elements in IoT

Output elements (actuators) convert electrical signals from the controller into physical action:

Output Element	Example	Action
LED / Display	Smart signage	Visual output
Motor (DC/Servo)	Robot arm	Mechanical movement
Relay	Smart switch	On/Off control
Speaker / Buzzer	Alarm system	Audio alert
Solenoid Valve	Smart irrigation	Fluid control

---

6. Compare IoT, IoE & M2M

Feature	IoT	IoE	M2M
Full Form	Internet of Things	Internet of Everything	Machine to Machine
Scope	Devices connected to internet	People, processes, data + devices	Two machines communicating directly
Human Involvement	Minimal	High (includes people)	None
Intelligence	Moderate	High (AI/analytics driven)	Low
Network Required	Internet	Internet + enterprise network	Any network (cellular, LAN)
Example	Smart bulb	Smart city ecosystem	Vending machine reporting stock

7. Wearable sensors in medical applications

1. **ECG sensor** - monitors heart electrical activity
2. **SpO2 sensor** - measures blood oxygen saturation
3. **Accelerometer** - tracks body movement and fall detection
4. **Glucose sensor** - continuous blood sugar monitoring
5. **Temperature sensor** - body temperature tracking
6. **EMG sensor** - measures muscle electrical signals

---

8. Way of representing inputs in Arduino programming

Inputs in Arduino are represented using `digitalRead()` for digital signals and `analogRead()` for analog signals.

```
// Digital input - returns HIGH or LOW
int val = digitalRead(pinNumber);

// Analog input - returns 0 to 1023
int val = analogRead(A0);
```

Pin mode must be declared in `setup()`:

```
pinMode(2, INPUT);        // Digital input
pinMode(2, INPUT_PULLUP); // Digital input with internal pull-up
```

---

9. Program to display "IoT" serially in serial monitor

```
void setup() {
  Serial.begin(9600);
}

void loop() {
  Serial.println("IoT");
  delay(1000);
}
```

---

10. Define IoT with an example

IoT (Internet of Things) is a network of physical objects embedded with sensors, software, and connectivity to collect and exchange data over the internet - enabling remote monitoring and control without human intervention.

Example: A smart refrigerator monitors its contents using sensors, tracks expiry dates, and automatically places online grocery orders when stock is low.

---

11. Brief SPI and I2C in physical design of IoT

SPI (Serial Peripheral Interface):

- 4-wire protocol: MOSI, MISO, SCK, SS
- Full duplex, high speed (up to 10 Mbps)
- Master-slave architecture, one master, multiple slaves
- Used for: SD cards, TFT displays, RF modules

I2C (Inter-Integrated Circuit):

- 2-wire protocol: SDA (data), SCL (clock)
- Supports multiple masters and slaves on same bus
- Each device has a unique 7-bit address
- Slower than SPI (~400 kbps), suitable for short distances
- Used for: OLED displays, BME280 sensor, EEPROM

---

12. Short notes on URI

URI (Uniform Resource Identifier) is a string of characters that uniquely identifies a resource on the internet or a network.

Syntax: `scheme://authority/path?query#fragment`

Example: `http://api.iot-device.com/sensor/temperature?unit=celsius`

- URI is used in IoT REST APIs to identify device endpoints.
- Two types: **URL** (locates a resource) and **URN** (names a resource).
- CoAP protocol (used in IoT) uses URI to address sensor data resources.

---

13. Main components of Arduino UNO board

1. **ATmega328P Microcontroller** - the processing core
2. **Digital I/O Pins (14)** - pins 0-13, can be input or output

3. **Analog Input Pins (6)** - A0 to A5, 10-bit ADC
4. **Power Pins** - 3.3V, 5V, GND, VIN
5. **USB Interface (ATmega16U2)** - for programming and serial communication
6. **Crystal Oscillator (16 MHz)** - clock source
7. **Reset Button** - restarts the sketch
8. **ICSP Header** - for in-circuit serial programming
9. **DC Power Jack** - external 7-12V power input
10. **TX/RX LEDs** - serial communication indicators

---

14. Need for API and its types

Need for API: API (Application Programming Interface) allows different software systems to communicate with each other in a standardized way. In IoT, APIs enable apps, cloud platforms, and devices to exchange data without knowing internal implementations.

Types:

1. **REST API** - uses HTTP methods (GET, POST, PUT, DELETE), most common in IoT
2. **SOAP API** - XML-based, used in enterprise systems
3. **GraphQL API** - client specifies exact data needed
4. **WebSocket API** - real-time bidirectional communication

---

15. Simple program using LED & push button to demonstrate digital IO

```
const int ledPin = 13;
const int buttonPin = 2;

void setup() {
  pinMode(ledPin, OUTPUT);
  pinMode(buttonPin, INPUT);
}

void loop() {
  int buttonState = digitalRead(buttonPin);
  if (buttonState == HIGH) {
    digitalWrite(ledPin, HIGH); // LED ON when button pressed
  } else {
    digitalWrite(ledPin, LOW);  // LED OFF when released
  }
}
```

---

16. Condition and looping statements in Arduino

Conditional Statements:

```
if (condition) { }
else if (condition) { }
else { }
switch (variable) { case x: break; }
```

Looping Statements:

```
for (int i = 0; i < 10; i++) { }
while (condition) { }
do { } while (condition);
```

Part-B

1. Logic design of IoT

The **Logic Design of IoT** defines the functional architecture of an IoT system, describing how data flows from physical devices through processing layers to applications.

Layers in IoT Logic Design

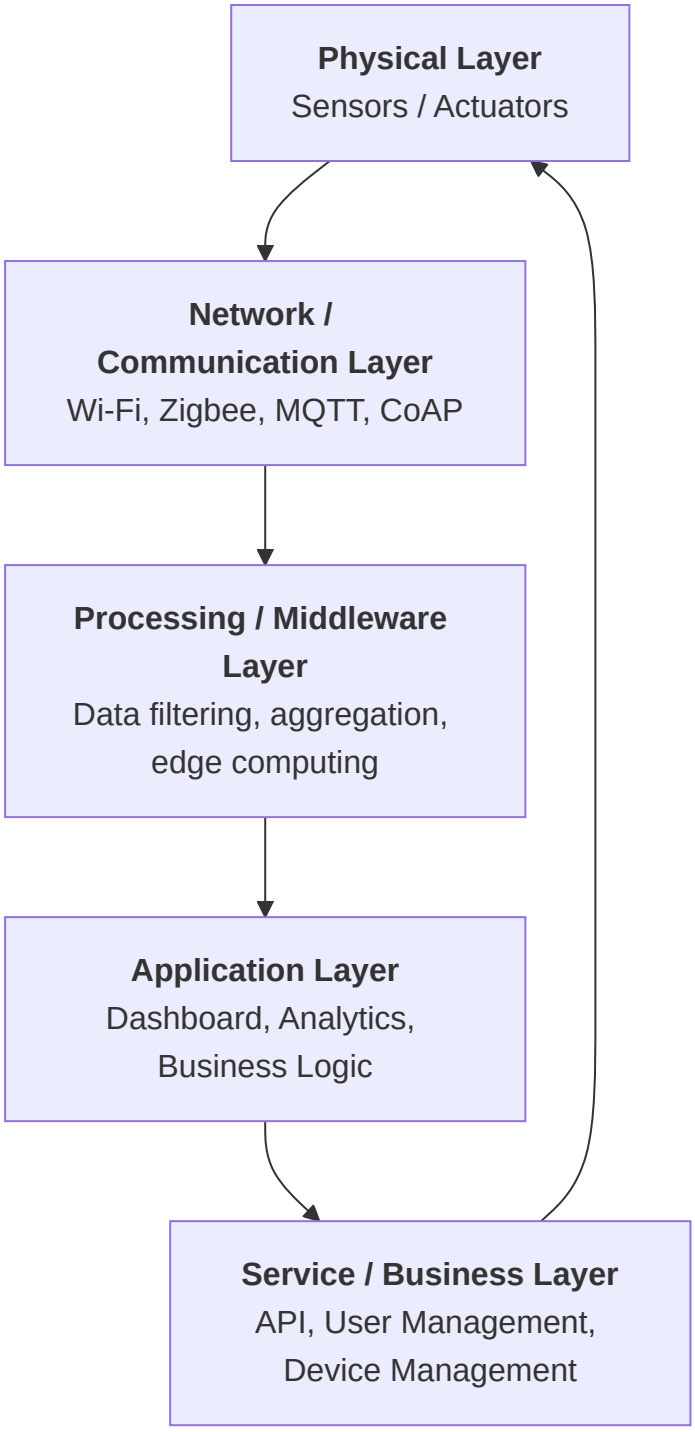

Layer-wise Explanation

1. Physical Layer (Perception Layer)

- Comprises sensors (temperature, humidity, motion) and actuators (motors, relays).
- Collects raw data from the physical environment.
- Example: DHT11 sensor reading temperature and humidity.

2. Network / Communication Layer

- Responsible for transmitting sensor data to processing units.
- Uses protocols: MQTT, CoAP, HTTP, Zigbee, Z-Wave, Wi-Fi, Bluetooth.
- Includes gateways that bridge different network types.

3. Processing / Middleware Layer

- Filters, processes, and aggregates raw data.
- Performs edge computing to reduce latency and cloud bandwidth.
- Includes databases and message brokers (e.g., Mosquitto, RabbitMQ).

4. Application Layer

- Delivers processed information to end users.
- Includes dashboards, mobile apps, alert systems.
- Example: ThingSpeak dashboard showing sensor graphs.

5. Service / Business Layer

- Manages overall system: user authentication, device registration, APIs.
- Enables third-party integration via REST APIs.
- Provides business intelligence using the processed IoT data.

Data Flow Summary

Stage	Action	Example
Sensing	Raw data collection	Temp = 37°C
Transmission	Data sent via protocol	MQTT publish to broker
Processing	Filtering and analysis	Detect fever condition
Action	Trigger actuator/alert	Send SMS alert
Feedback	Update application	Dashboard updated

---

2. IoT levels with examples for real world applications (16 marks)

IoT systems are categorized into **6 levels** based on complexity, number of nodes, data flow, and the degree of cloud involvement.

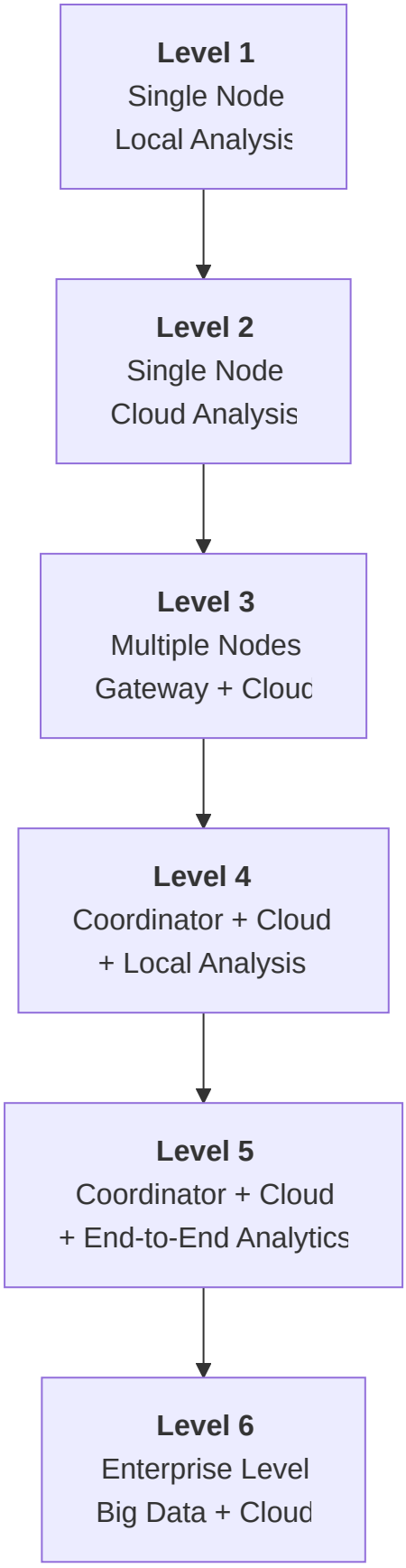

Level 1 - Single Node, Minimal Network

- One device with sensing and actuation.
- Data analyzed locally on the device itself.

- No cloud or internet required.
- Suitable for simple, standalone control systems.

Architecture: `Sensor -> Microcontroller -> Actuator`

Example: Automatic night lamp - LDR sensor triggers LED via Arduino with no internet.

Feature	Detail
Nodes	1
Cloud	No
Analysis	On-device
Connectivity	None

Level 2 - Single Node with Cloud Analysis

- Single device connected to the internet.
- Raw data sent to cloud for storage and analysis.
- Cloud sends control commands back to actuator.

Architecture: `Sensor -> Microcontroller -> Internet -> Cloud -> Actuator`

Example: Smart energy meter - reads power consumption and pushes data to cloud dashboard. User views analytics via mobile app.

Feature	Detail
Nodes	1
Cloud	Yes
Analysis	Cloud
Connectivity	Wi-Fi / Ethernet

Level 3 - Multiple Nodes with Local Processing

- Multiple sensing nodes, each with local processing.
- Data pre-processed at node level before being sent to cloud.
- Reduces cloud load and latency.

Architecture: `Multiple Sensors -> Microcontrollers (local processing) -> Gateway -> Cloud`

Example: Smart home system - multiple sensors (temperature, door, motion) each pre-process data and send summaries to cloud.

Feature	Detail
Nodes	Multiple
Cloud	Yes
Analysis	Local + Cloud
Connectivity	Wi-Fi / Zigbee

Level 4 - Coordinator Node + Cloud

- A coordinator node (gateway/hub) collects data from multiple sensor nodes.
- Coordinator performs aggregation and sends to cloud.
- Cloud sends control decisions back.

Architecture: `Sensor Nodes -> Coordinator -> Internet -> Cloud`

Example: Smart agriculture - soil sensors and weather stations send data to a local gateway, which aggregates and uploads to cloud. Cloud triggers irrigation valves.

Feature	Detail
Nodes	Many + Coordinator
Cloud	Yes
Analysis	Coordinator + Cloud
Connectivity	Zigbee / LoRa + Internet

Level 5 - Coordinator + Cloud + End-to-End Analytics

- Full analytics pipeline from edge to cloud.
- Edge analytics run at coordinator; advanced ML/AI in cloud.
- Bidirectional data flow with real-time feedback.

Architecture: `Sensor Nodes -> Edge Gateway (Analytics) -> Cloud (ML/AI) -> Actuator Commands`

Example: Industrial IoT - factory machines send vibration and temperature data. Edge device detects anomalies in real time. Cloud runs predictive maintenance models and

schedules repair.

Feature	Detail
Nodes	Many
Cloud	Yes (AI/ML)
Analysis	Edge + Cloud
Feedback	Real-time

Level 6 - Enterprise IoT with Big Data

- Largest scale IoT deployment.
- Multiple gateways, cloud platforms, and enterprise application servers.
- Big Data frameworks (Hadoop, Spark) used for processing.
- Integrates with ERP, CRM, and business systems.

Architecture: `Sensor Networks -> Multiple Gateways -> Cloud + Big Data Platform -> Enterprise Applications`

Example: Smart city infrastructure - traffic sensors, pollution monitors, CCTV cameras, water meters all feed into a central city management platform with big data analytics, enabling city-wide decision making.

Feature	Detail
Scale	City / Enterprise level
Cloud	Multi-cloud
Analysis	Big Data + AI
Integration	ERP, BI, Dashboards

Summary Table

Level	Nodes	Cloud	Local Analysis	Example
1	1	No	Yes	Automatic night lamp
2	1	Yes	No	Smart energy meter
3	Multiple	Yes	Partial	Smart home
4	Many + Coordinator	Yes	Coordinator	Smart agriculture

Level	Nodes	Cloud	Local Analysis	Example
5	Many + Edge	Yes (AI/ML)	Full edge analytics	Industrial IoT
6	Enterprise scale	Multi-cloud	Big Data	Smart city

---

3. IoT protocols used at different layers (16 marks)

IoT systems use a layered protocol architecture. Different protocols operate at different layers, each suited to its specific communication requirements.

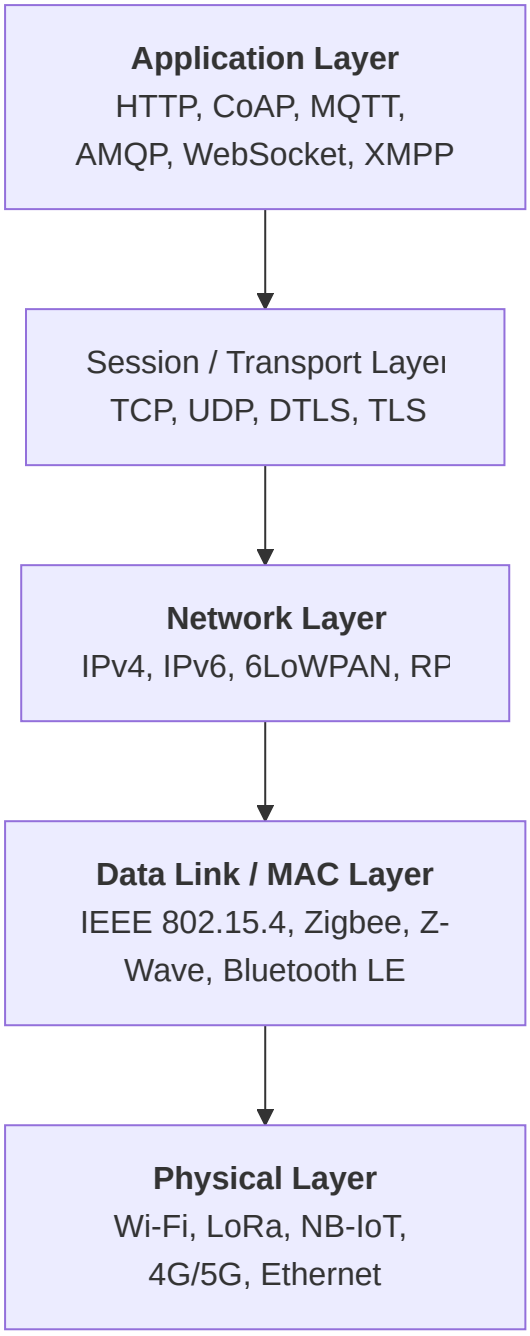

---

1. Physical Layer Protocols

Responsible for actual transmission of bits over a physical medium.

Protocol	Range	Power	Use Case
Wi-Fi (IEEE 802.11)	~100m	High	Smart home, indoor IoT
LoRa / LoRaWAN	~10km	Very Low	Smart agriculture, asset tracking
NB-IoT	Wide area	Very Low	Smart metering, city IoT
Bluetooth / BLE	~10m	Low	Wearables, healthcare
Zigbee	~75m	Low	Home automation mesh networks
Z-Wave	~30m	Low	Smart home devices
4G / 5G	Wide area	Moderate	Connected vehicles, mobile IoT

---

2. Network Layer Protocols

Handle addressing and routing of data packets.

Protocol	Description
IPv4	Traditional 32-bit addressing, limited IoT scalability
IPv6	128-bit addressing - sufficient for billions of IoT devices
6LoWPAN	IPv6 adaptation for low-power, low-bandwidth networks (IEEE 802.15.4)
RPL	Routing protocol designed for low-power lossy networks

---

3. Transport Layer Protocols

Ensure reliable or fast delivery of data between source and destination.

Protocol	Type	Use in IoT
TCP	Reliable, connection-oriented	Used where data integrity matters (HTTP/MQTT over TCP)
UDP	Unreliable, connectionless	Used for speed-critical IoT apps (CoAP runs over UDP)
TLS	Security layer over TCP	Encrypts MQTT, HTTP communication
DTLS	Security layer over UDP	Encrypts CoAP communication

---

4. Application Layer Protocols

Define the format and rules for data exchange between IoT devices and applications.

MQTT (Message Queuing Telemetry Transport)

- Publish-subscribe model via a broker.
- Lightweight, designed for constrained devices.
- Runs over TCP, port 1883 (8883 for TLS).
- QoS levels: 0 (at most once), 1 (at least once), 2 (exactly once).
- Use case: Remote sensor monitoring, smart home.

CoAP (Constrained Application Protocol)

- RESTful protocol designed for constrained devices.
- Runs over UDP - very lightweight.
- Supports GET, POST, PUT, DELETE like HTTP.
- Use case: Smart energy meters, embedded sensors.

HTTP / HTTPS

- Standard web protocol.
- Used when devices have enough resources.
- Heavier than MQTT/CoAP.
- Use case: Cloud APIs, REST-based IoT dashboards.

AMQP (Advanced Message Queuing Protocol)

- Enterprise-grade message queuing.
- Reliable delivery with acknowledgments.
- Use case: Industrial IoT, enterprise messaging.

WebSocket

- Full duplex communication over a single TCP connection.
- Enables real-time bi-directional communication.
- Use case: Real-time dashboards, live sensor feeds.

XMPP (Extensible Messaging and Presence Protocol)

- XML-based messaging protocol.
- Good for device-to-device communication.
- Use case: Smart grid, presence detection.

Protocol Comparison Table

Protocol	Transport	Model	Weight	Best For
MQTT	TCP	Pub-Sub	Light	Remote monitoring
CoAP	UDP	Request-Response	Very Light	Constrained devices
HTTP	TCP	Request-Response	Heavy	Cloud APIs
AMQP	TCP	Message Queue	Moderate	Enterprise IoT
WebSocket	TCP	Bidirectional	Moderate	Real-time dashboards
XMPP	TCP	Pub-Sub	Moderate	Device chat / presence

Protocol Selection by Application

Application	Recommended Protocol	Reason
Smart agriculture sensor	MQTT + LoRa	Low power, long range
Industrial monitoring	AMQP	Reliable delivery
Wearable health device	BLE + MQTT	Low energy, lightweight
Smart meter	CoAP + NB-IoT	Very constrained, wide area
Real-time dashboard	WebSocket	Bidirectional live data

---

4. IoT Design Methodology

IoT Design Methodology is a systematic approach to developing IoT systems from requirement analysis to deployment. It ensures reliable, scalable, and secure systems.

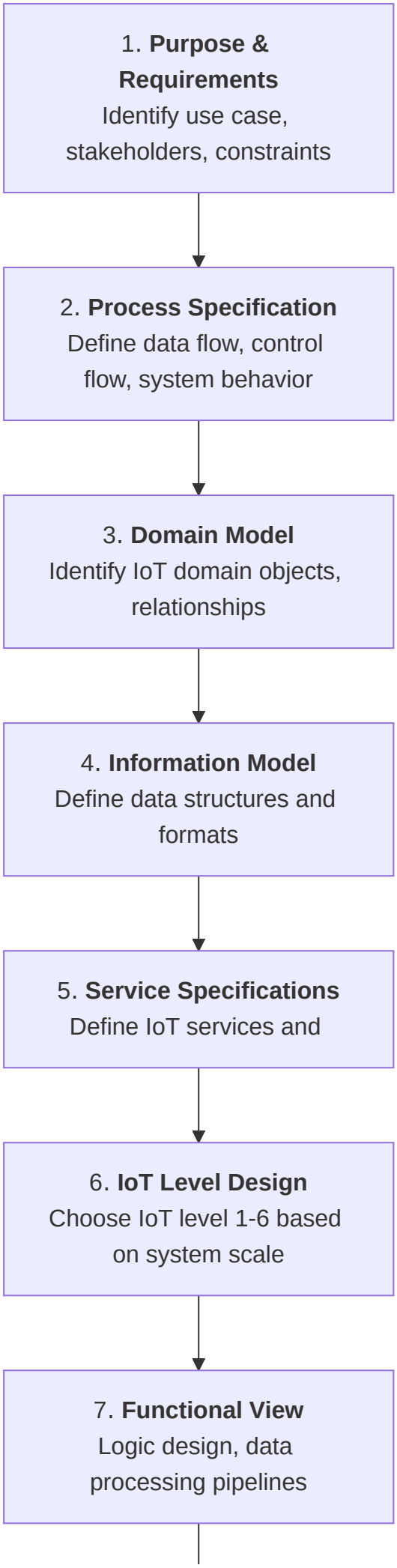
1. **Purpose & Requirements**
Identify use case, stakeholders, constraints
2. **Process Specification**
Define data flow, control flow, system behavior
3. **Domain Model**
Identify IoT domain objects, relationships
4. **Information Model**
Define data structures and formats
5. **Service Specifications**
Define IoT services and
6. **IoT Level Design**
Choose IoT level 1-6 based on system scale
7. **Functional View**
Logic design, data processing pipelines

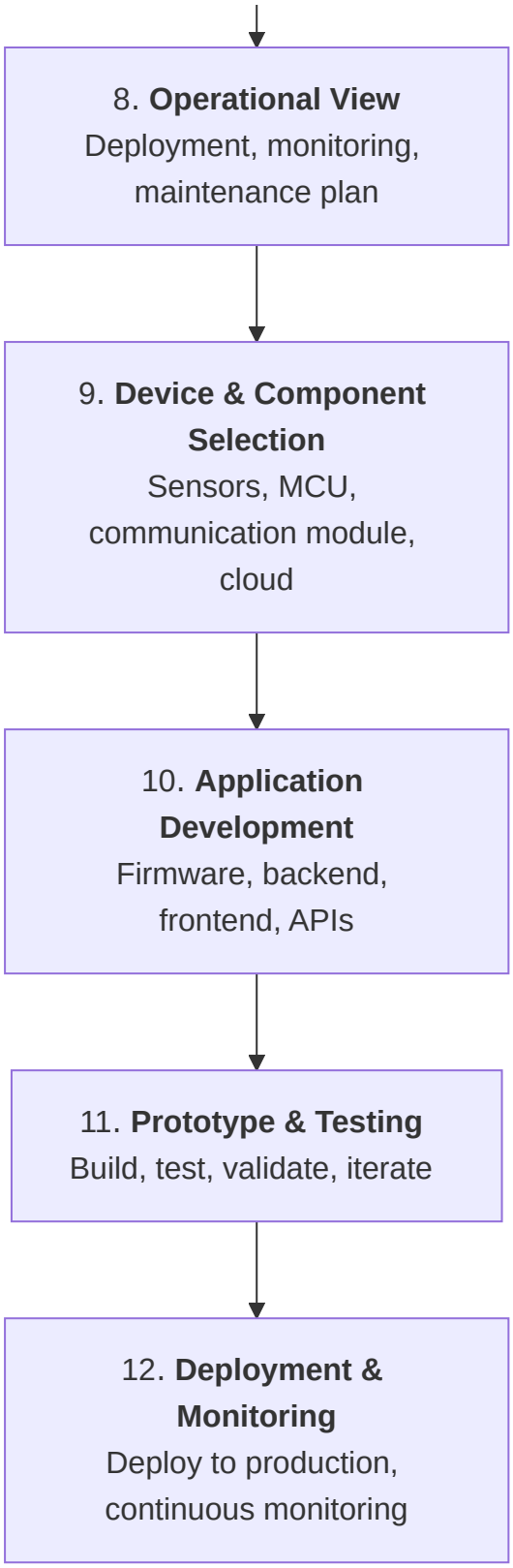

Step-by-Step Description

Step 1 - Purpose & Requirements

- Define the problem the IoT system solves.
- Identify users, environment, power constraints, and connectivity.
- Example: "Monitor patient vitals remotely in a hospital."

Step 2 - Process Specification

- Model system behavior using flowcharts or state machines.
- Define what happens when sensor data crosses a threshold.

Step 3 - Domain Model

- Identify entities: devices, users, data, gateways.
- Define relationships between them.

Step 4 - Information Model

- Define data schemas: JSON, XML structure of sensor data.
- Example: `{ "device_id": "001", "temp": 37.2, "timestamp": "..." }`

Step 5 - Service Specifications

- Define REST APIs or MQTT topics the system exposes.
- Specify authentication, authorization, and data formats.

Step 6 - IoT Level Design

- Choose the appropriate IoT level (1-6) based on scale and requirements.

Step 7 - Functional View

- Design the logic: data collection, processing, alerting, storage.

Step 8 - Operational View

- Plan deployment, monitoring dashboards, update mechanisms.

Step 9 - Device & Component Selection

- Select sensors, microcontrollers, communication modules, cloud platform.

Step 10 - Application Development

- Write firmware for devices.
- Develop backend APIs and frontend dashboards.

Step 11 - Prototype & Testing

- Build a prototype, test each component.
- Validate end-to-end data flow and response time.

Step 12 - Deployment & Monitoring

- Deploy to production environment.
- Set up monitoring, alerts, and over-the-air update mechanisms.

---

5. Different Interfaces available in Arduino UNO

Arduino UNO provides multiple communication and I/O interfaces to connect with sensors, modules, and other devices.

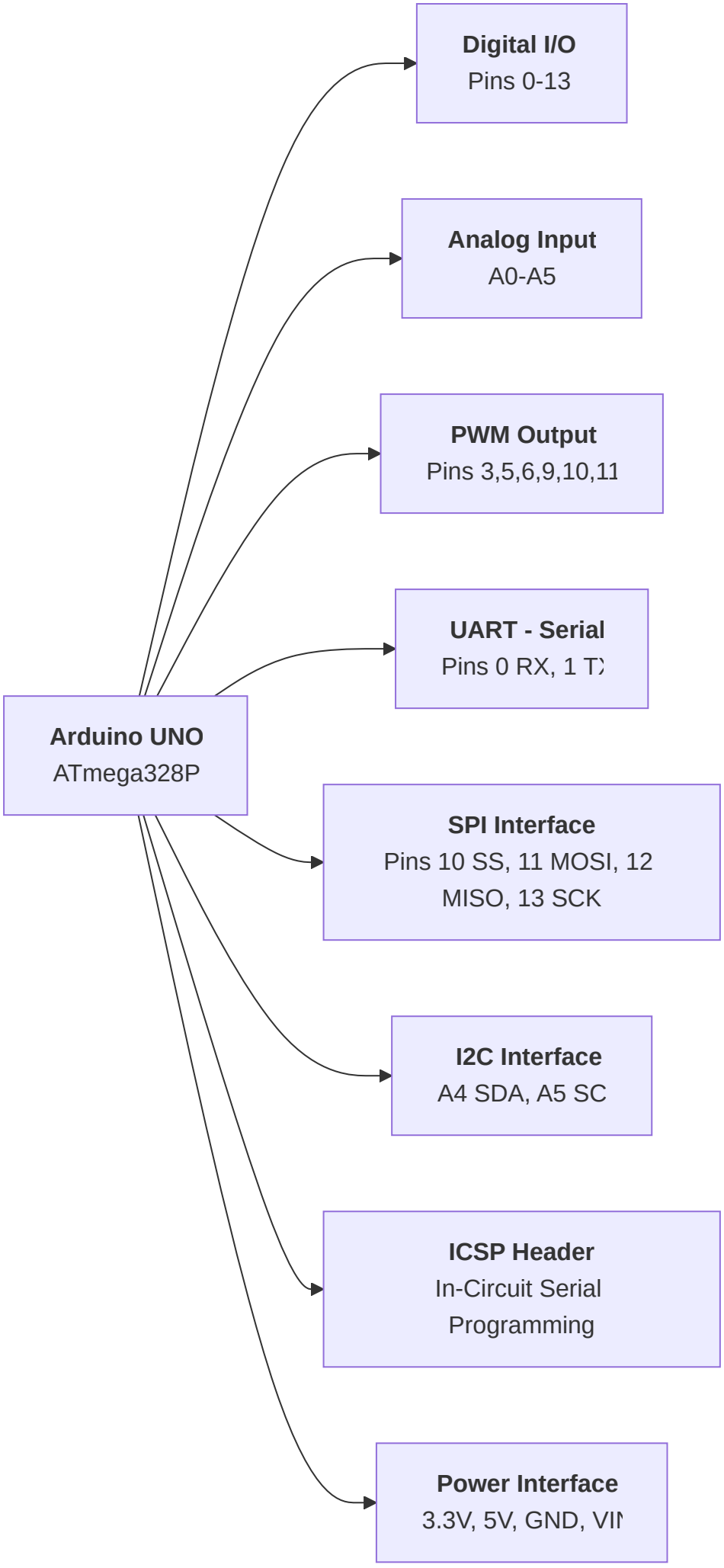
Arduino UNO
ATmega328P
Digital I/O
Pins 0-13
Analog Input
A0-A5
PWM Output
Pins 3,5,6,9,10,11
UART - Serial
Pins 0 RX, 1 T
SPI Interface
Pins 10 SS, 11 MOSI, 12
MISO, 13 SCK
I2C Interface
A4 SDA, A5 SC
ICSP Header
In-Circuit Serial
Programming
Power Interface
3.3V, 5V, GND, VI

1. Digital I/O Interface (Pins 0-13)

- 14 digital pins, each configurable as INPUT or OUTPUT.
- Operates at 5V logic levels.
- Maximum current per pin: 40mA.
- Used to read digital sensors (buttons, switches) or drive digital outputs (LEDs, relays).

```
pinMode(7, OUTPUT);
digitalWrite(7, HIGH);
```

2. Analog Input Interface (Pins A0-A5)

- 6 analog input pins with 10-bit ADC resolution (0-1023).
- Input voltage range: 0V to 5V.
- Used for reading analog sensors: potentiometers, LDR, temperature sensors.

```
int val = analogRead(A0); // Returns 0 to 1023
```

3. PWM Interface (Pins 3, 5, 6, 9, 10, 11)

- 6 pins support Pulse Width Modulation (8-bit, 0-255).
- Used for dimming LEDs, controlling servo/DC motor speed.

```
analogWrite(9, 128); // 50% duty cycle
```

4. UART (Serial) Interface (Pins 0, 1)

- Pin 0 = RX (Receive), Pin 1 = TX (Transmit).
- Used for serial communication with PC (via USB) or other UART devices.
- Also used for GSM modules, GPS modules.

```
Serial.begin(9600);
Serial.println("Hello");
```

5. SPI Interface (Pins 10, 11, 12, 13)

Pin	Function
10	SS (Slave Select)
11	MOSI (Master Out Slave In)
12	MISO (Master In Slave Out)
13	SCK (Clock)

- High-speed synchronous interface.
- Used with SD cards, TFT displays, RF modules (nRF24L01).

6. I2C Interface (Pins A4, A5)

Pin	Function
A4	SDA (Serial Data)
A5	SCL (Serial Clock)

- 2-wire protocol supporting multiple devices with unique addresses.
- Used with OLED displays, BMP180, MPU6050.

7. ICSP Header

- 6-pin header for In-Circuit Serial Programming.
- Used to flash bootloader directly using an external programmer.

8. Power Interface

Pin	Voltage
3.3V	3.3V output (up to 150mA)
5V	5V output (regulated)
GND	Ground reference
VIN	External power input (7-12V)

---

6. Physical design of Arduino UNO

The physical design of Arduino UNO refers to the actual hardware components and their physical layout on the board.

> **Note:** For a detailed annotated board image, refer to: Arduino UNO Official Hardware Overview
> `https://store.arduino.cc/products/arduino-uno-rev3`

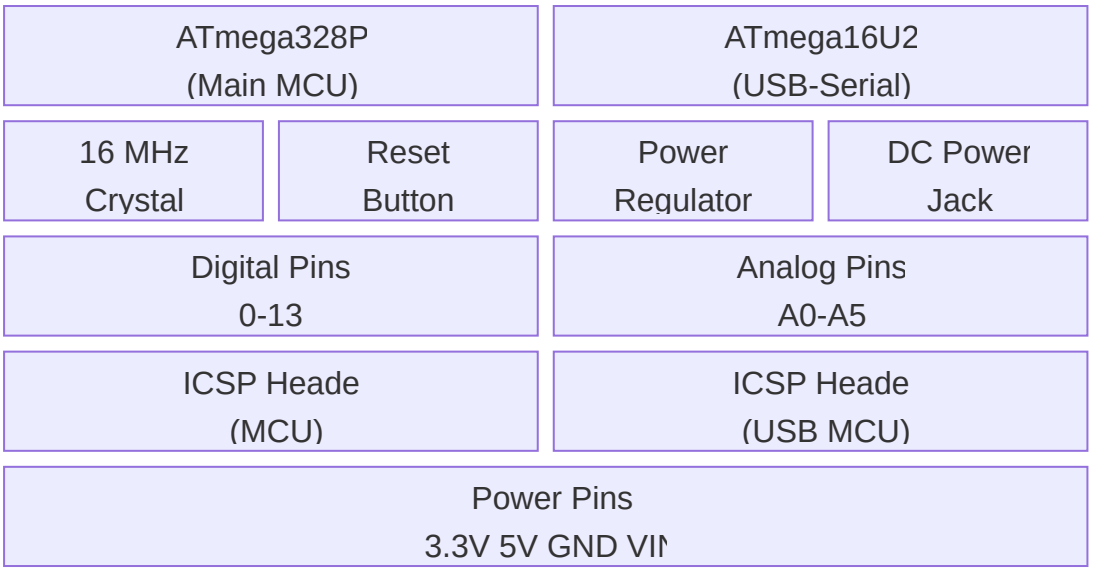

Key Physical Components

1. ATmega328P Microcontroller

- 8-bit AVR RISC microcontroller, 16 MHz clock.
- 32 KB Flash, 2 KB SRAM, 1 KB EEPROM.
- Located at the center of the board.

2. ATmega16U2 (USB-to-Serial Converter)

- Converts USB communication to UART for programming.
- Located near the USB-B connector.

3. USB Type-B Connector

- Used for programming the board and serial communication with PC.

4. DC Power Jack

- Accepts 7-12V DC external power supply.

5. Voltage Regulator

- Converts input voltage (VIN/DC Jack) to regulated 5V.

6. Crystal Oscillator (16 MHz)

- Provides clock signal to the MCU.

7. Digital I/O Pin Headers (0-13)

- 14 pins along the top edge of the board.

8. Analog Input Pin Headers (A0-A5)

- 6 pins along the bottom edge of the board.

9. Power Pin Headers

- 3.3V, 5V, GND, IOREF, RESET, VIN.

10. ICSP Headers

- Two 6-pin ICSP headers: one for ATmega328P, one for ATmega16U2.
- Used for bootloader burning and firmware flashing.

11. Reset Button

- Restarts the currently running sketch.

12. TX/RX LEDs

- Blink during serial data transmission/reception.

13. Power and Pin 13 LEDs

- Power LED: indicates board is powered.
- Pin 13 LED: built-in LED for testing.

Specification	Value
Microcontroller	ATmega328P
Operating Voltage	5V
Input Voltage	7-12V
Digital I/O Pins	14 (6 PWM)
Analog Input Pins	6
Flash Memory	32 KB
SRAM	2 KB
EEPROM	1 KB
Clock Speed	16 MHz

---

7. Concept of sensors and actuators with types and applications in IoT systems

Sensors

A **sensor** is a device that detects physical or environmental parameters and converts them into electrical signals that can be read by a microcontroller or computer.

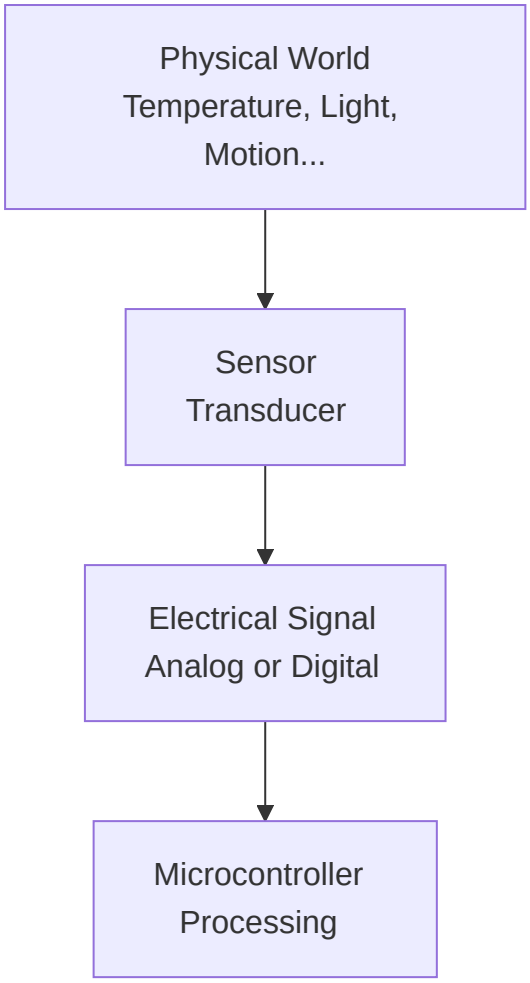

Types of Sensors:

Type	Sensor	Measured Parameter	Example Application
Temperature	DHT11, LM35, DS18B20	Temperature / Humidity	HVAC, Weather station
Light	LDR, BH1750	Light intensity	Smart lighting, Solar tracking
Motion / Proximity	PIR, HC-SR04	Movement, Distance	Security systems, Smart parking
Pressure	BMP180, BMP280	Atmospheric pressure, altitude	Drones, Weather monitoring
Gas	MQ-2, MQ-135	Smoke, CO2, LPG	Gas leakage detection
Accelerometer / Gyro	MPU6050	Acceleration, orientation	Wearables, drones
Moisture	Soil moisture sensor	Water content	Smart irrigation
Heart Rate / SpO2	MAX30100, MAX30102	Pulse, blood oxygen	Patient monitoring
Sound	Sound sensor, Microphone	Audio levels	Smart home voice control

Type	Sensor	Measured Parameter	Example Application
Current / Voltage	INA219, ACS712	Electrical parameters	Smart energy monitoring

Characteristics of Sensors:

- **Sensitivity** - minimum change it can detect.
- **Accuracy** - closeness to true value.
- **Range** - minimum to maximum measurable value.
- **Response Time** - time to react to change.
- **Resolution** - smallest distinguishable increment.

Actuators

An **actuator** is a device that receives electrical control signals and converts them into physical action or mechanical movement.

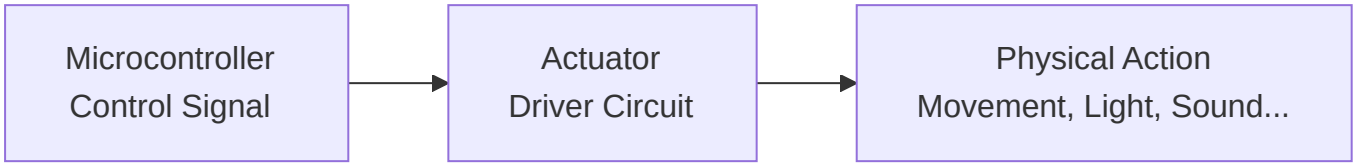

Types of Actuators:

Type	Example	Output Action	Application
Electric Motor	DC Motor, Servo, Stepper	Rotational motion	Robots, conveyor belts, drones
Relay	Electromagnetic relay	On/Off switching	Smart switches, industrial control
LED / Display	RGB LED, LCD, OLED	Visual output	Indicators, dashboards
Solenoid Valve	Solenoid valve	Fluid/gas flow control	Smart irrigation, HVAC
Buzzer / Speaker	Piezo buzzer	Audio alert	Alarms, notifications
Heater / Cooler	Peltier module	Temperature control	Incubators, cooling systems
Linear Actuator	Pneumatic actuator	Linear motion	Automated doors, robotic arms

---

Sensor-Actuator Interaction in IoT

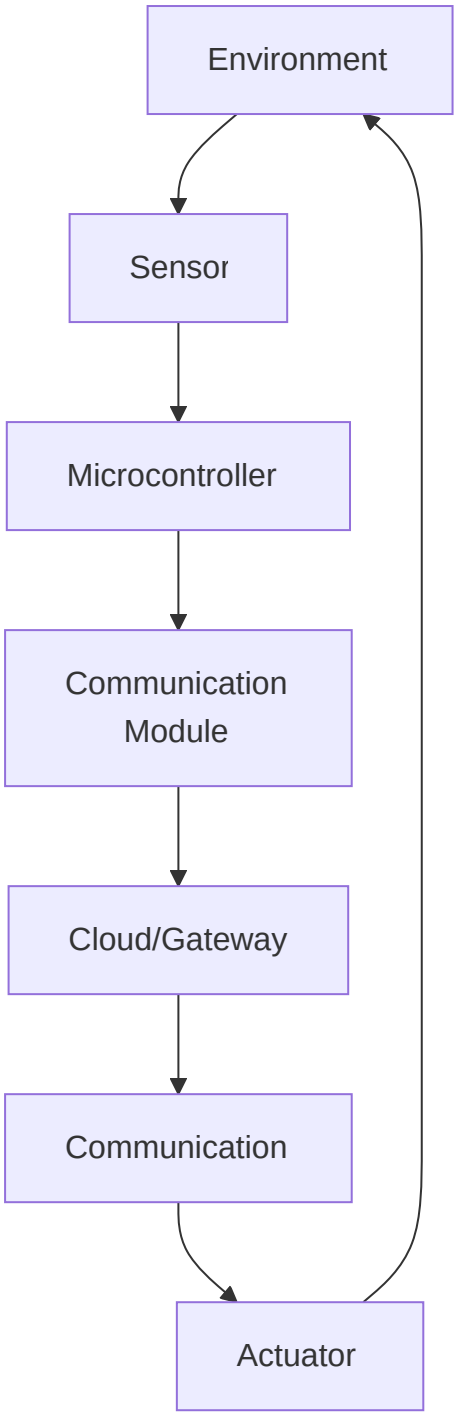

The sensor continuously feeds data to the microcontroller, which processes it and decides whether to trigger an actuator - locally or via cloud commands.

Example: In a smart greenhouse:

- Soil moisture sensor detects low moisture.
- MCU sends data via Wi-Fi to cloud.
- Cloud logic triggers a command.
- Solenoid valve (actuator) opens to irrigate.

8. IoT Physical Design

The **physical design of an IoT system** describes the actual hardware components and their interconnection that form the complete IoT deployment.

Components of IoT Physical Design

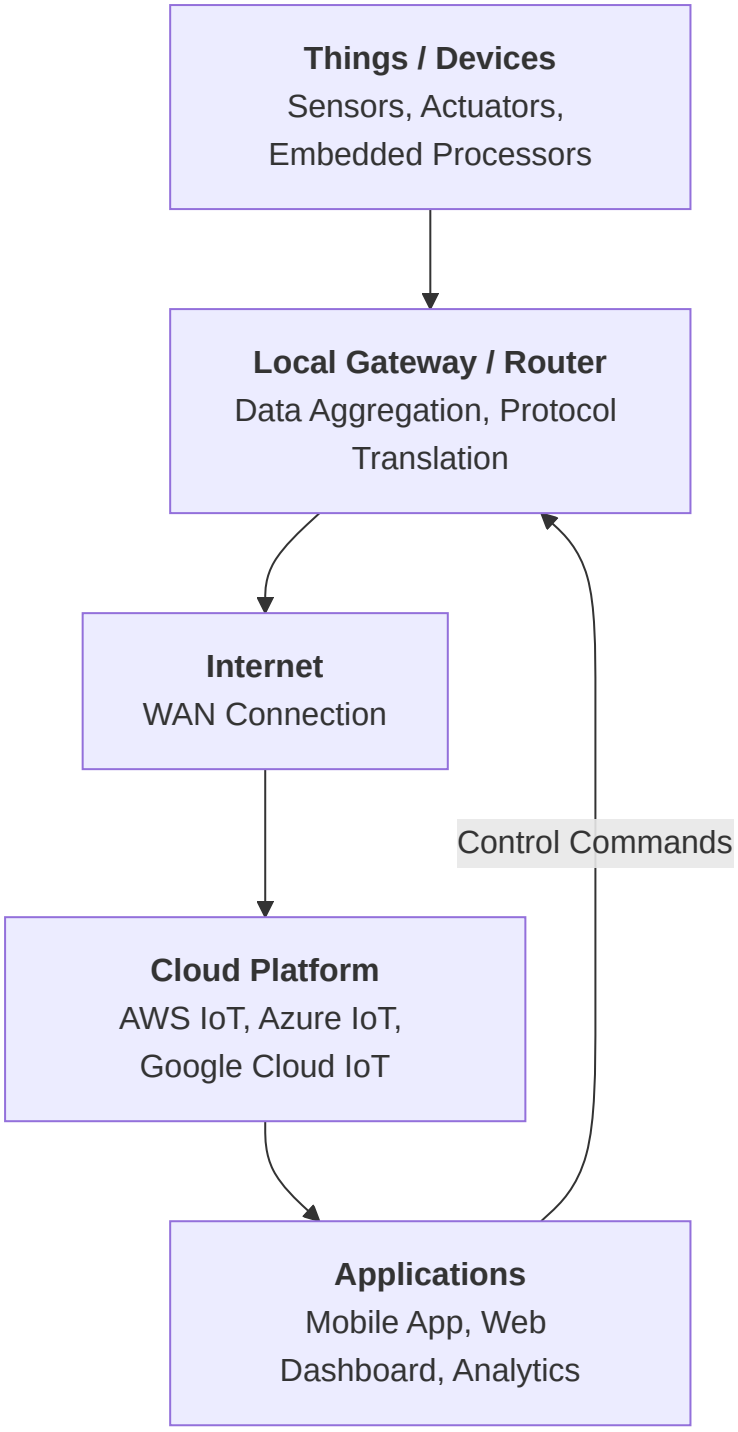

1. Things (End Devices)

- Physical objects embedded with sensors and actuators.
- Include embedded processor/microcontroller (Arduino, ESP32, Raspberry Pi).
- Communicate wirelessly (Wi-Fi, Zigbee, BLE) or wired (Ethernet, RS485).

2. Gateway

- Bridges the communication between end devices and the internet.
- Performs protocol translation (e.g., Zigbee to MQTT over TCP/IP).
- May perform edge processing and data filtering.
- Examples: Raspberry Pi gateway, commercial IoT hubs.

3. Communication Network

- Connects devices to the gateway and gateway to cloud.
- Technologies: Wi-Fi, LoRa, NB-IoT, 4G/5G, Ethernet.
- Protocols: MQTT, CoAP, HTTP.

4. Cloud Platform

- Stores and processes large volumes of IoT data.
- Provides APIs for device management, data analytics, and dashboards.
- Examples: AWS IoT Core, Azure IoT Hub, ThingSpeak, Google Cloud IoT.

5. Application Layer

- End-user interface: mobile app, web dashboard.
- Enables monitoring, control, alerts, and data visualization.

Physical Design Elements Summary

Element	Hardware Example	Role
Sensor node	Arduino + DHT11 + ESP8266	Data collection
Actuator node	Arduino + Relay module	Physical action
Local gateway	Raspberry Pi	Aggregation + routing
Communication	Wi-Fi Router	Network access
Cloud	AWS IoT Core	Data storage + processing
Application	React Web App	User interface

---

9. Functional parts of IoT with neat diagram

The **functional architecture of IoT** describes the logical components and how they interact to achieve a complete IoT solution.

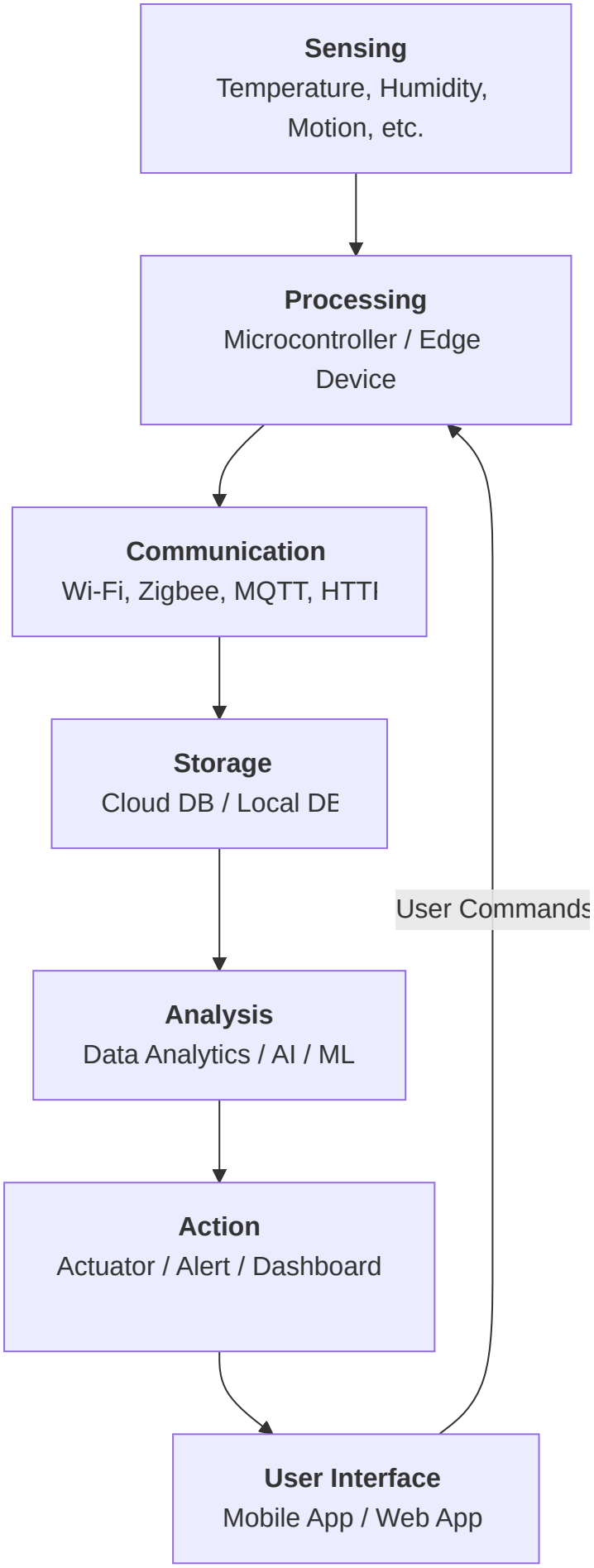

1. Sensing / Perception

- Interface with the physical world through sensors.

- Converts physical parameters (temp, light, motion) to digital data.
- Also includes actuators for output actions.
- **Components:** Sensors (DHT11, PIR), ADC, signal conditioning circuits.

2. Processing

- Core computation unit of the IoT device.
- Reads sensor data, applies logic, decides actions.
- Can perform edge computing to reduce cloud dependency.
- **Components:** Microcontrollers (Arduino, STM32), Single Board Computers (Raspberry Pi, ESP32).

3. Communication

- Transfers processed data to cloud/gateway and receives commands.
- Involves multiple protocols depending on range and power.
- **Components:** Wi-Fi module (ESP8266), LoRa module, Zigbee, Cellular (SIM800).
- **Protocols:** MQTT, CoAP, HTTP, Zigbee.

4. Storage

- Stores sensor data for historical analysis and auditing.
- Local storage: SD card, EEPROM, local database.
- Cloud storage: AWS S3, Firebase, InfluxDB (time-series).

5. Analysis

- Derives insights from collected data.
- Real-time analysis: anomaly detection, threshold alerts.
- Batch analysis: trend analysis, predictive maintenance using ML.
- **Tools:** Node-RED, AWS Lambda, Google Dataflow, Python ML models.

6. Action / Control

- Based on analysis, system triggers actuators or sends notifications.
- Example: Alert SMS sent, relay switched ON, valve opened.

7. User Interface

- Allows users to monitor system status and issue control commands.
- Dashboards: Grafana, ThingSpeak, custom React/Angular apps.
- Mobile apps for remote monitoring.

Functional Parts Summary Table

Functional Part	Hardware	Software/Protocol
Sensing	Sensors, ADC	Device driver, firmware
Processing	MCU, SBC	Arduino IDE, Python
Communication	Wi-Fi, LoRa, Zigbee	MQTT, CoAP, HTTP
Storage	SD card, Cloud DB	Firebase, InfluxDB
Analysis	Cloud server, Edge	Python, Node-RED, ML
Action	Actuators, Buzzers	Control logic
User Interface	PC, Mobile	Web app, Mobile app

---

10. IoT based patient monitoring system by selecting sensors and actuators (16 marks)

Overview

An IoT-based patient monitoring system continuously tracks vital parameters of a patient and sends real-time data to healthcare providers via the internet, triggering alerts when values deviate from normal.

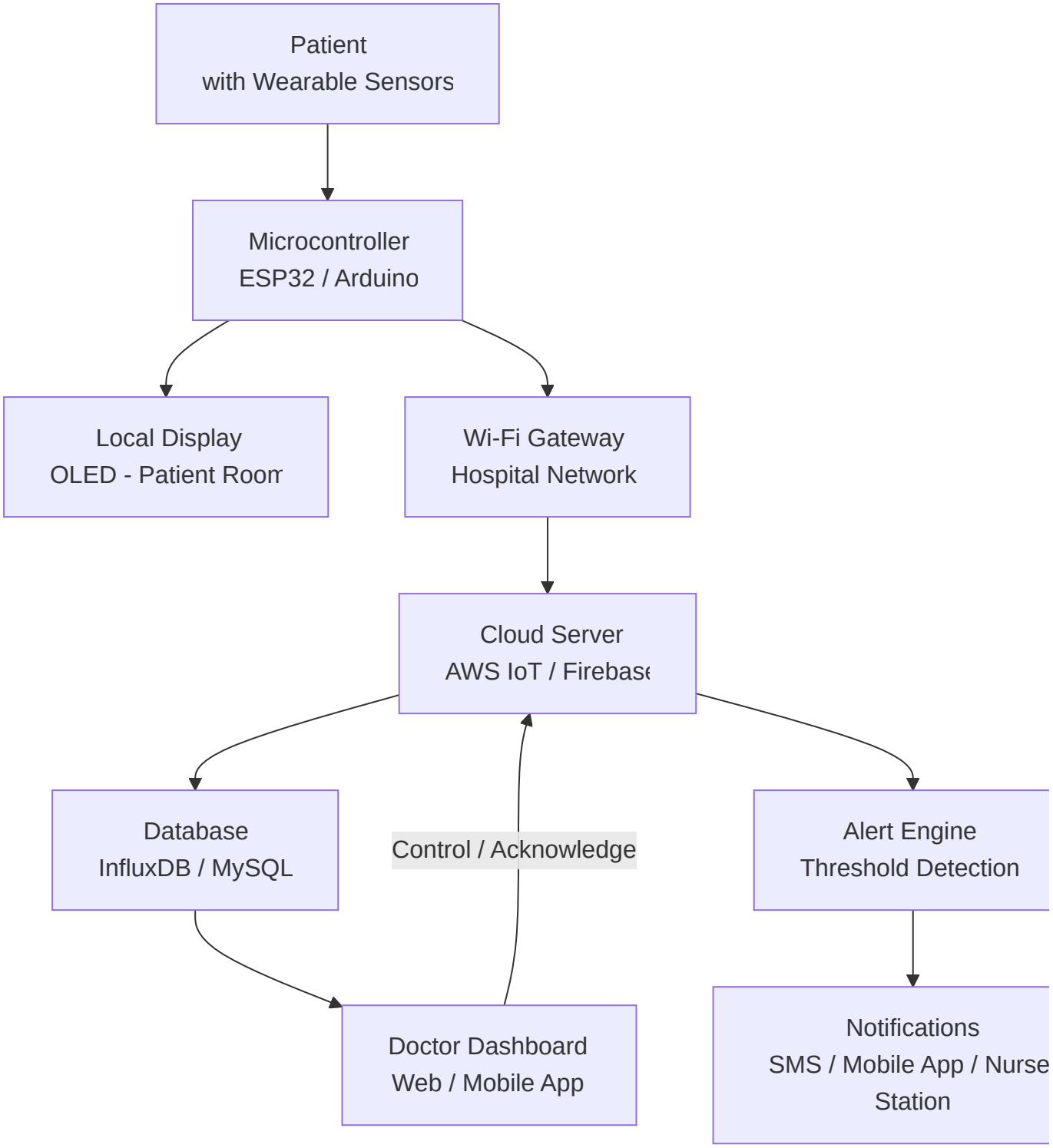

Sensors Selected

Parameter	Sensor	Normal Range	Interface
Heart Rate & SpO2	MAX30102	HR: 60-100 bpm, SpO2: >95%	I2C
Body Temperature	MLX90614 (IR)	36.5 - 37.5°C	I2C
Blood Pressure	BMP280 (indirect)	90/60 - 120/80 mmHg	I2C
ECG	AD8232 ECG module	Normal sinus rhythm	Analog

Parameter	Sensor	Normal Range	Interface
Respiratory Rate	MPU6050 (chest movement)	12-20 breaths/min	I2C
Ambient Temperature	DHT22	Environment monitoring	Digital
Patient Motion / Fall	ADXL345 Accelerometer	Detect falls	I2C

Actuators / Output Devices Selected

Output	Component	Purpose
Local alarm	Piezo buzzer	Alert if critical value detected locally
Visual indicator	RGB LED	Green = normal, Red = critical
Display	0.96" OLED	Show vitals on patient bedside monitor
Relay	Relay module	Control IV drip rate or medical equipment

Hardware Architecture

Central Controller: ESP32 (dual-core, built-in Wi-Fi + Bluetooth)

- Reads all sensors over I2C and analog pins.
- Processes data locally (edge detection of abnormal vitals).
- Publishes data to MQTT broker over Wi-Fi.

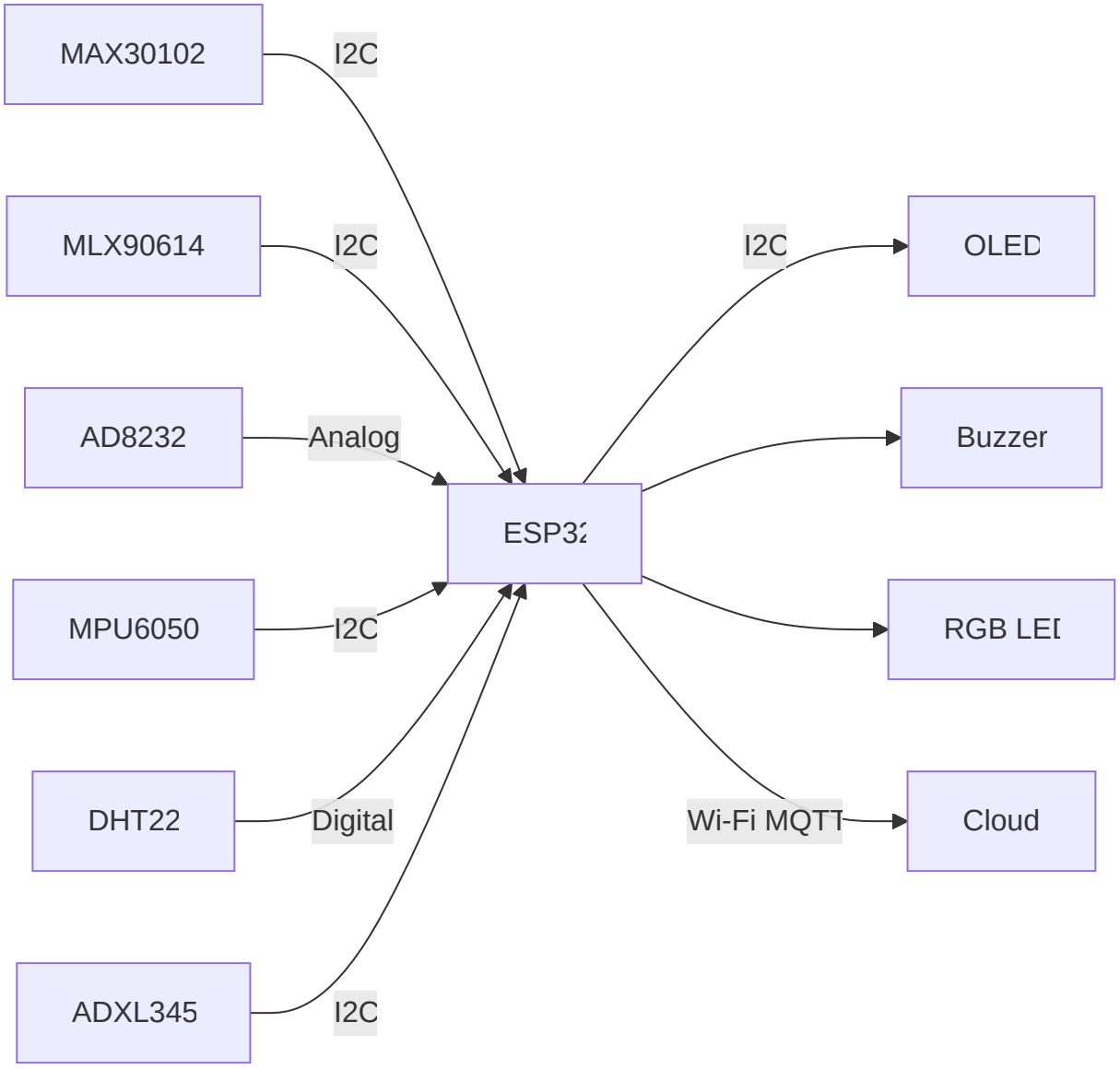

Data Flow

1. Sensors continuously sample patient vitals every few seconds.
2. ESP32 reads data, applies threshold checks (edge processing).
3. If any value is abnormal - local buzzer/LED alerts instantly.
4. ESP32 publishes all readings via MQTT to cloud broker (e.g., AWS IoT Core).
5. Cloud stores data in time-series database (InfluxDB).
6. Alert engine checks thresholds; if exceeded - triggers SMS/push notification to doctor.
7. Doctor views real-time and historical dashboard on web/mobile app.

Alert Thresholds

Vital	Warning Threshold	Critical Threshold
Heart Rate	<50 or >120 bpm	<40 or >150 bpm
SpO2	<94%	<90%
Temperature	>38°C	>39.5°C
Respiratory Rate	<10 or >25 breaths/min	<8 or >30 breaths/min

---

Communication Stack

Layer	Technology
Sensor to MCU	I2C, Analog
MCU to Cloud	Wi-Fi + MQTT (TLS)
Cloud to Doctor	HTTPS + WebSocket
Alert Delivery	SMS (Twilio), Push Notification

System Features

- **Real-time monitoring** with < 2 second latency.
- **Local edge alerts** even if internet is down.
- **Historical data** for trend analysis and discharge reports.
- **Multi-patient support** via unique device IDs per patient.
- **Secure data** transmission via TLS-encrypted MQTT.

Advantages

Feature	Benefit
Continuous monitoring	Eliminates need for manual hourly checks
Remote access	Doctor monitors from anywhere
Automated alerts	Faster emergency response
Data logging	Supports clinical decision making
Scalable	Deploy across multiple wards easily

---

11. Program to toggle LED when a button is pressed

Logic: The LED state flips each time the button is pressed (not held). Debouncing is implemented to avoid false triggers.

```
const int ledPin = 13;
const int buttonPin = 2;

bool ledState = false;
bool lastButtonState = LOW;
bool currentButtonState = LOW;
unsigned long lastDebounceTime = 0;
const unsigned long debounceDelay = 50; // ms

void setup() {
  pinMode(ledPin, OUTPUT);
  pinMode(buttonPin, INPUT);
  digitalWrite(ledPin, LOW);
}

void loop() {
  bool reading = digitalRead(buttonPin);

  // Reset debounce timer if button state changed
  if (reading != lastButtonState) {
    lastDebounceTime = millis();
  }

  // Only register input after debounce period
  if ((millis() - lastDebounceTime) > debounceDelay) {
    if (reading != currentButtonState) {
      currentButtonState = reading;

      // Toggle LED only on button press (rising edge)
      if (currentButtonState == HIGH) {
        ledState = !ledState;
        digitalWrite(ledPin, ledState ? HIGH : LOW);
      }
    }
  }

  lastButtonState = reading;
}
```

Explanation:

- `ledState` tracks whether the LED is currently ON or OFF.

- The button press is detected on the **rising edge** (LOW to HIGH transition) to avoid toggling multiple times per press.
- Debounce logic filters out electrical noise from the button contacts using a 50ms delay window.
- `millis()` is used (not `delay()`) so the system remains responsive.