Double Sideband-Suppressed Carrier(DSB-SC)

The equation of AM wave in simple form is given by,

$$S(t) = Ac \cos wct + \frac{Ac}{2} Cos(wc + wm)t + \frac{Ac}{2} Cos(wc - wm)t$$

Here, carrier component remains constant and does not convey any information.

Therefore, if the carrier is suppressed, only sidebands remain in the spectrum requiring less power.

- DSB-SC Contains two side bands i.e USB & LSB
- Power efficiency is 100%
- % Power saving in DSB-SC w.r.t AM is 66.67%.

DSB-SC Modulation

A DSB-SC signal is obtained by multiplying the modulating signal x(t) with carrier signal c(t).

So, we need a product modulator for the generation of DSB-SC wave.

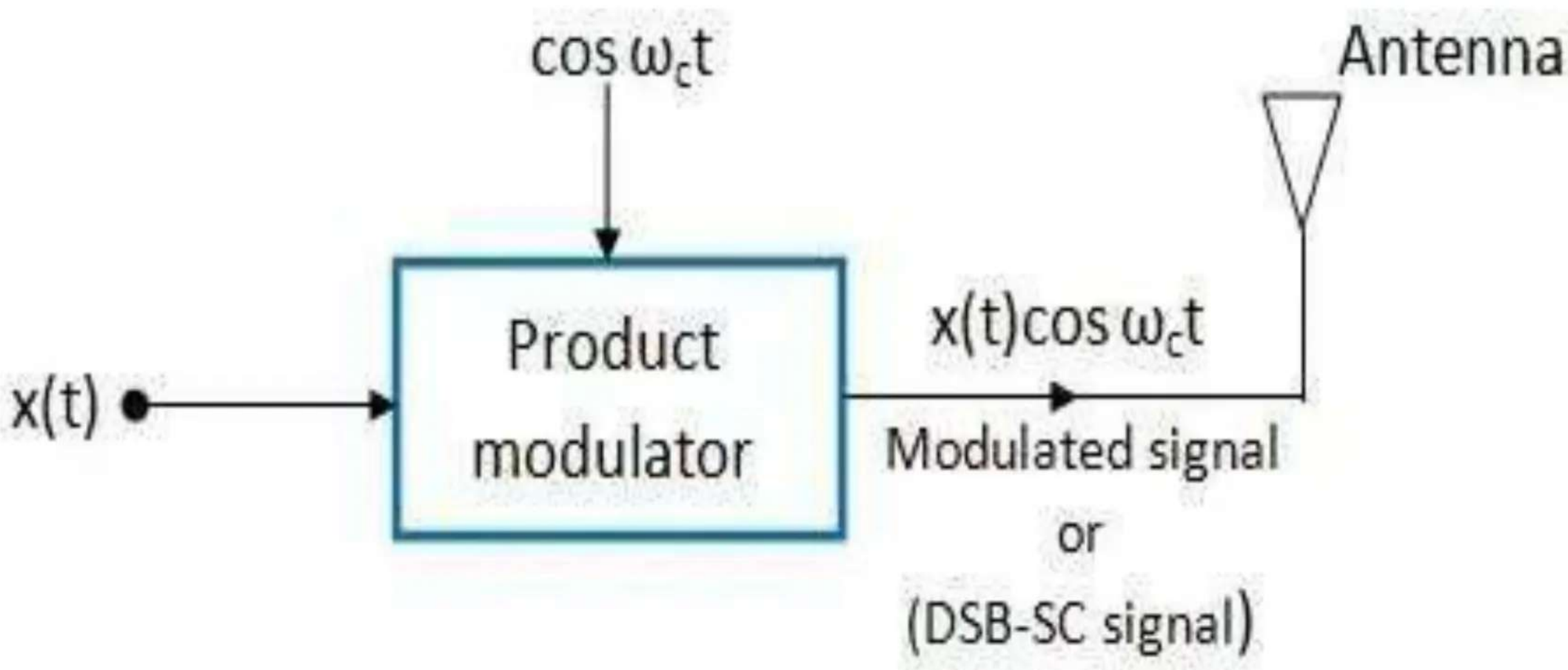

DSB-SC Modulation

1. **Balanced Modulator**:

It consists of two amplitude modulators arranged in balanced configuration to suppress the carrier completely.

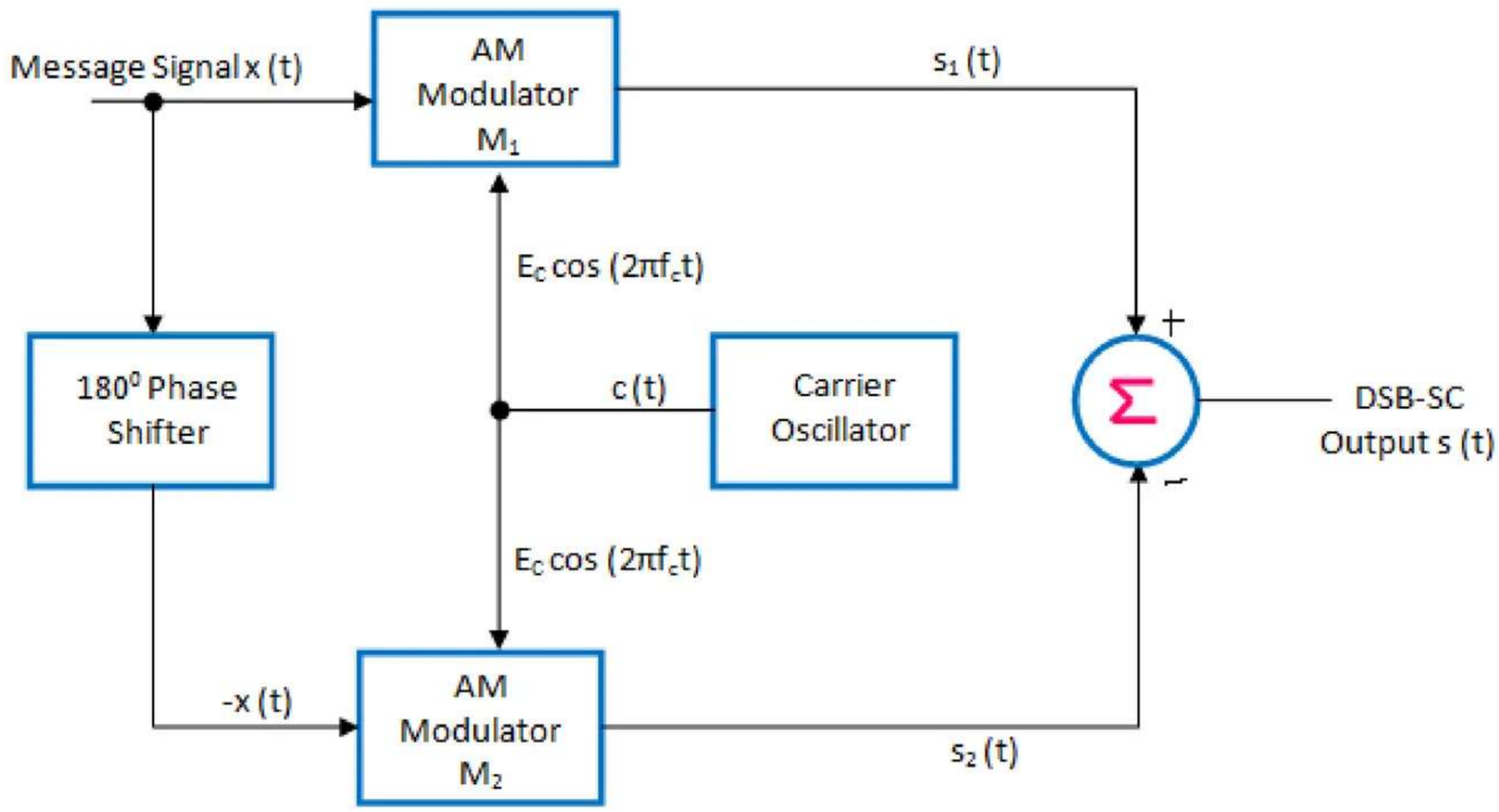

DSB-SC Modulation

Operation:

- Carrier c(t) is applied to both the modulators.
- Message signal x(t) is applied directly to modulator 1 and with a phase shift of 180^0 to modulator 2.

Output of modulator 1 is,

$S1(t) = Ac[1+ mx(t)] \cos 2\pi fct$ ---(1)

Output of modulator 2 is,

$S2(t) = Ac[1- mx(t)] \cos 2\pi fct$ ---(2)

These two outputs are applied to subtractor, whose output is, $2mAcx(t) \cos 2\pi fct$---(3)

DSB-SC Modulation

2. **Ring Modulator**:

It operates in two modes

- Mode1: Without modulating signal x(t)
- Mode 2: With modulating signal x(t)

Mode1: **c(t) is positive**

- Diodes D1, D2 forward biased, D3,D4 Reverse biased
- Output of ring modulator will be zero.

C(t) is negative

- Diodes D1, D2 reverse biased, D3,D4 forward biased
- Output of ring modulator will be zero.

Mode2:

- When modulating signal is present, during positive half cycle D1, D2 will be ON and secondary of T1 is directly applied to primary of T2.
- Output will be positive
- During negative half cycle of modulating signal D3, D4 will be ON producing positive voltage.

DSB-SC Modulation

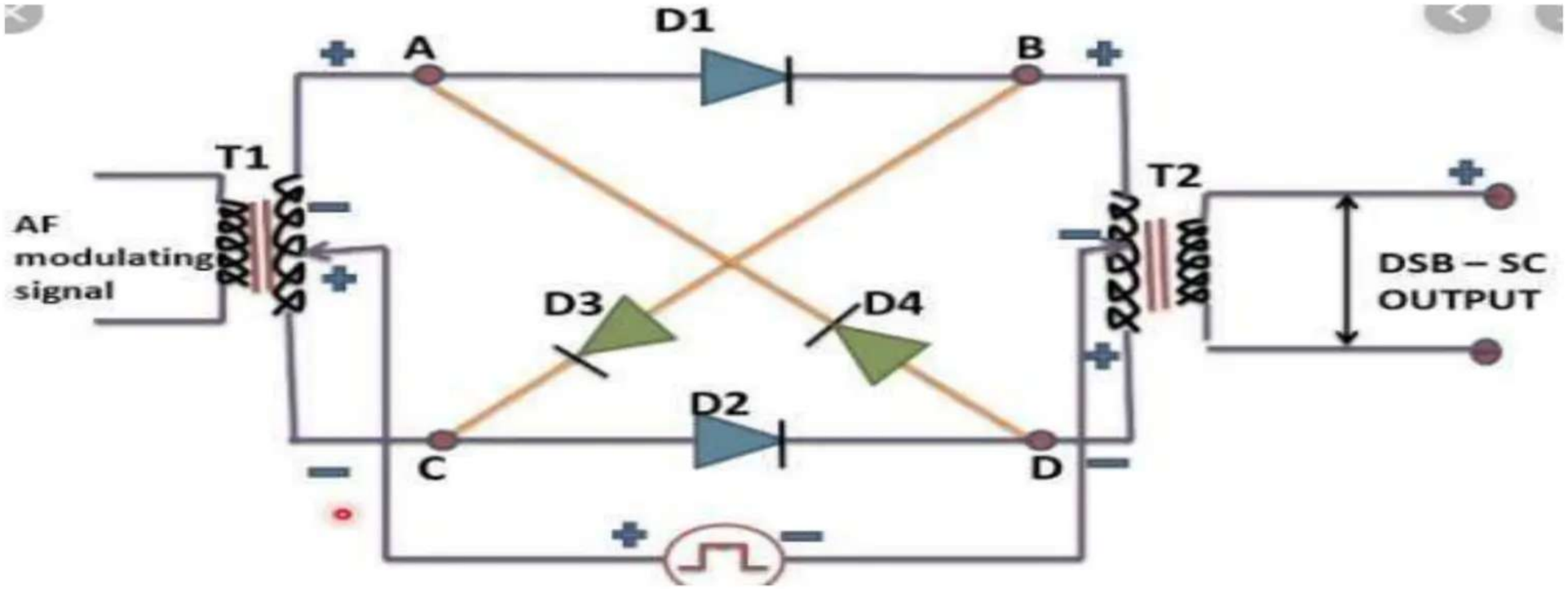

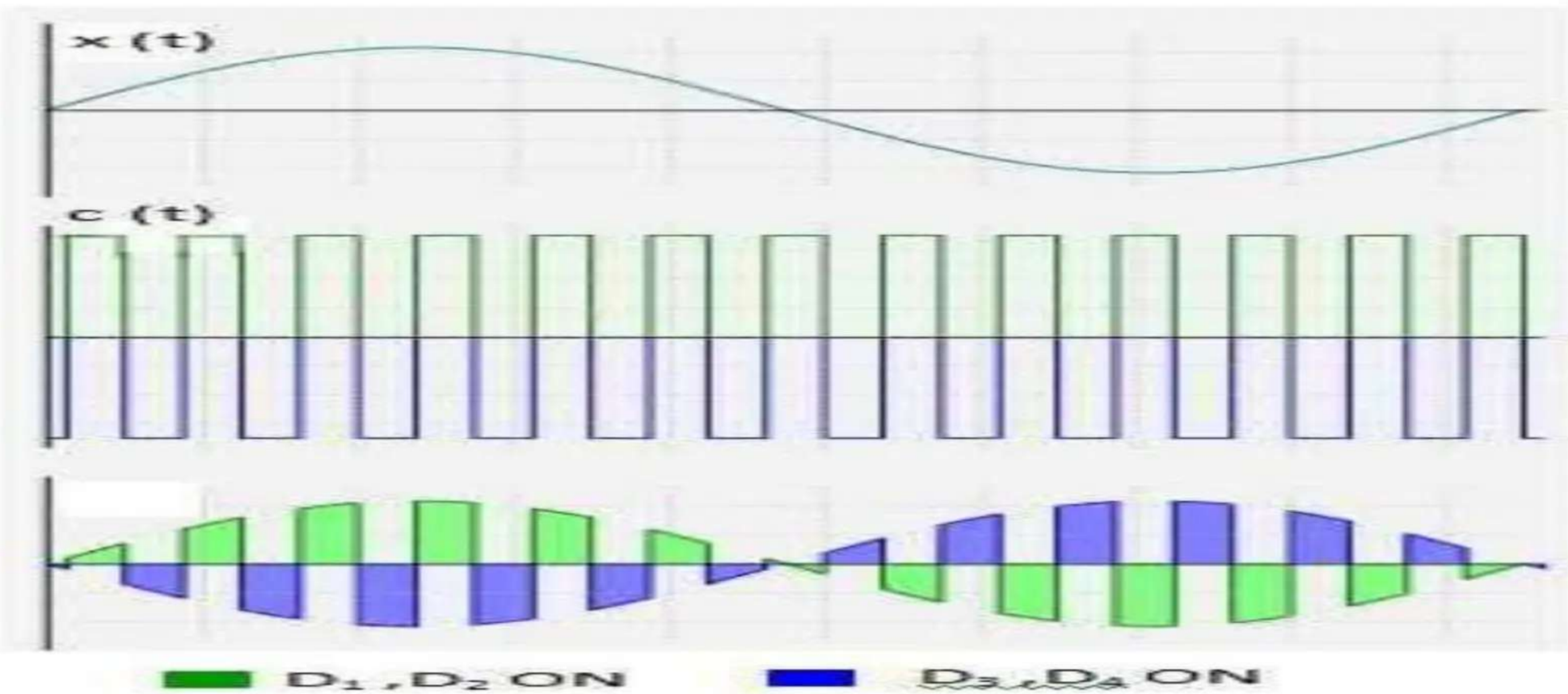

Time Domain representation of DSB-SC

Message signal is given by,

$$x(t) = Am \cos(2\pi fmt) \text{ ---(1)}$$

Carrier signal is given by,

$$C(t) = Ac \cos(2\pi fct) \text{ ---(2)}$$

DSB-SC modulated signal is given by,

$$S(t) = x(t)\, c(t) \text{ ---(3)}$$

$$S(t) = 1/2AmAc[\cos 2\pi(fc+fm)t + \cos 2\pi(fc-fm)t] \text{--(4)}$$

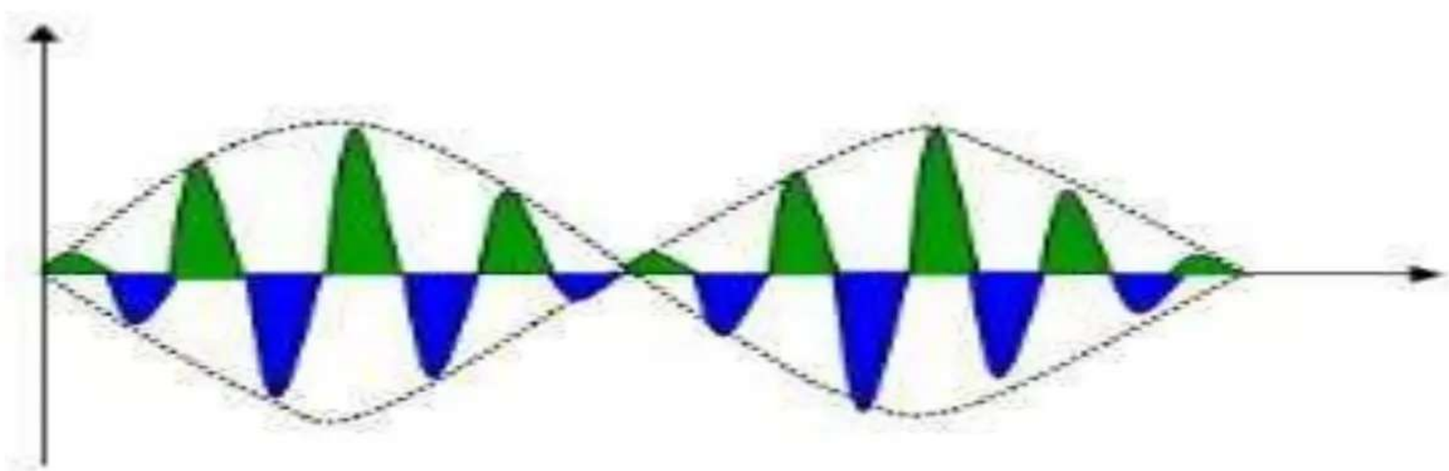

Frequency Domain representation of DSB-SC

The frequency spectrum of DSB-SC is obtained by taking Fourier transform of s(t)

S(f) = F{[1/2AmAc[cos2π(fc+fm)t + cos2π(fc-fm)t]}

$$S(f) = \frac{1}{4}AmAc[\delta(f+fc+fm)+\delta(f-fc-fm)+\delta(f+fc-fm)+\delta(f-fc+fm)$$

This is the spectrum of DSB-SC wave.

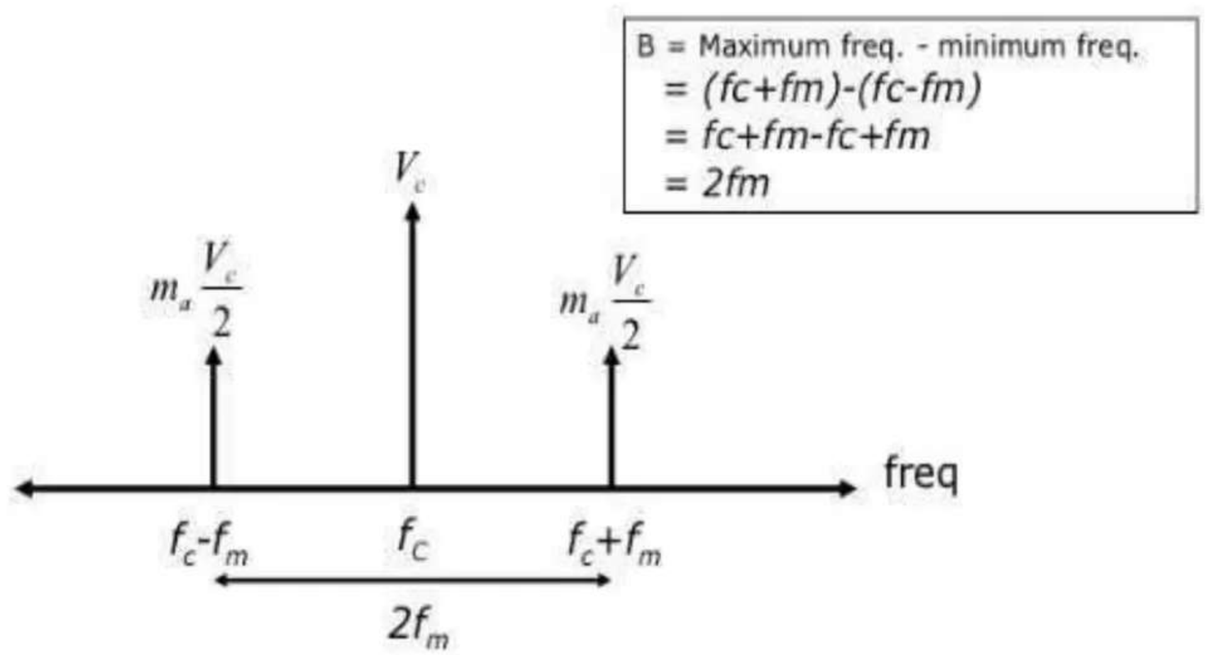

Demodulation of DSB-SC

Coherent Detection:

The modulating signal x(t) is recovered from DSB-SC wave s(t) by multiplying it with a locally generated carrier and then passing through a LPF.

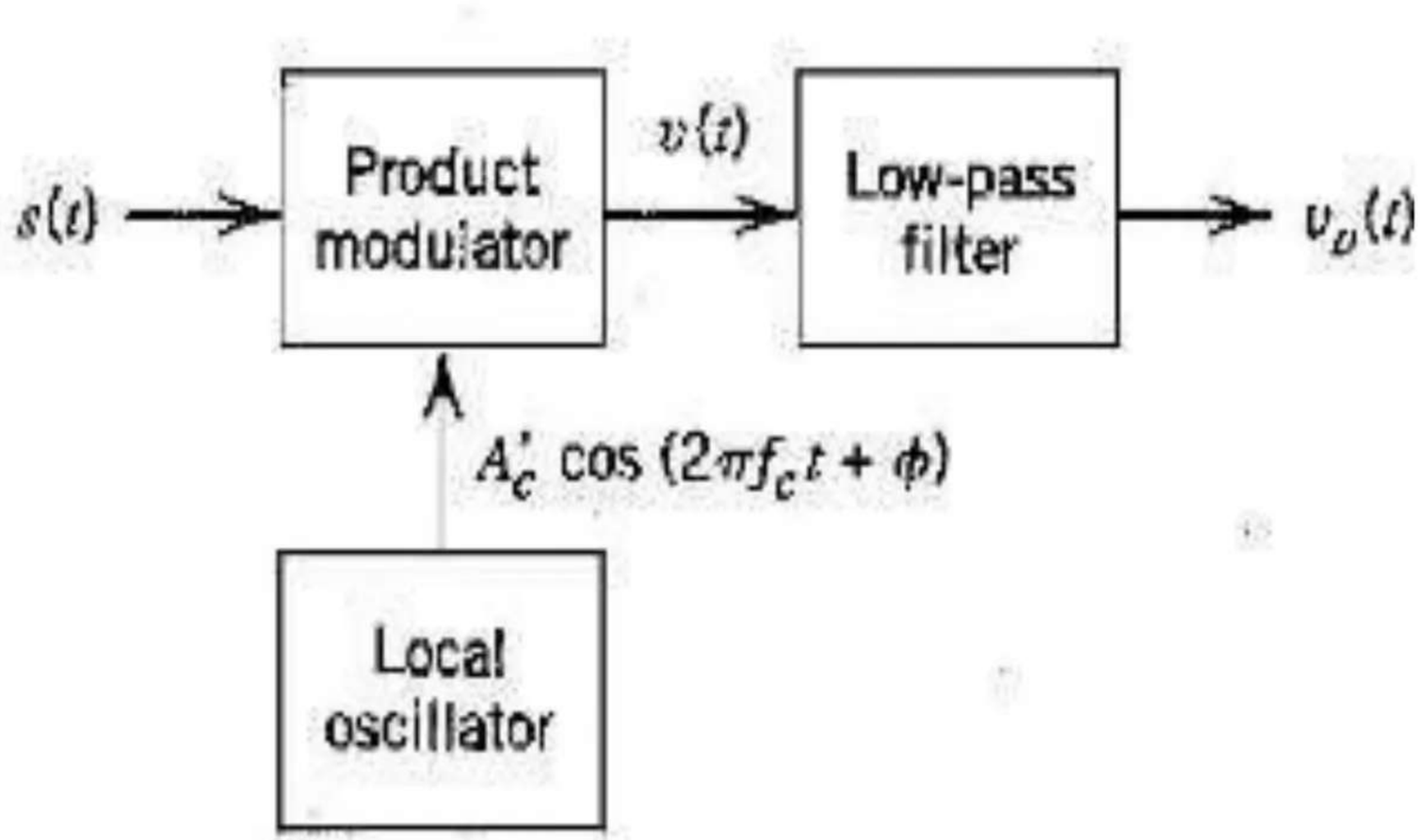

Demodulation of DSB-SC

$V(t) = s(t)\, c(t)$ ---(1)

Where,

$S(t) = 1/2AmAc[\cos 2\pi(fc+fm)t + \cos 2\pi(fc-fm)t]$—(2)

$C(t) = \cos 2\pi fct$ ---(3)

Substituting (2) & (3) in (1)

$$m(t) = \frac{1}{4} VmVc[\cos 2\pi(2fc + fm)t + \cos 2\pi fmt \cos 2\pi(2fc - fm)t + \cos 2\pi fmt$$

When this is passed through a LPF,

$V0(t) = \frac{1}{4} VmV\cos 2\pi fmt$

Single Sideband-Suppressed Carrier(SSB-SC)

The modulation process in which only one side band is transmitted and with carrier suppression is called Single sideband suppressed carrier (SSB-SC).

Modulating Signal $m(t) = A_m \cos(2\pi f_m t)$ and Carrier Signal $c(t) = A_c \cos(2\pi f_c t)$

SSB-SC signal can be generated by passing DSB-SC signal through BPF. And DSB-SC signal is generated by multiplying m(t) & c(t).

$A_{SSB\text{-}SC}(t) = \frac{A_m A_c}{2} \cos 2\pi(f_c + f_m)t$ (or)

$A_{SSB\text{-}SC}(t) = \frac{A_m A_c}{2} \cos 2\pi(f_c - f_m)t$

Generation of SSB-SC

1. Filter or Frequency Discrimination Method:

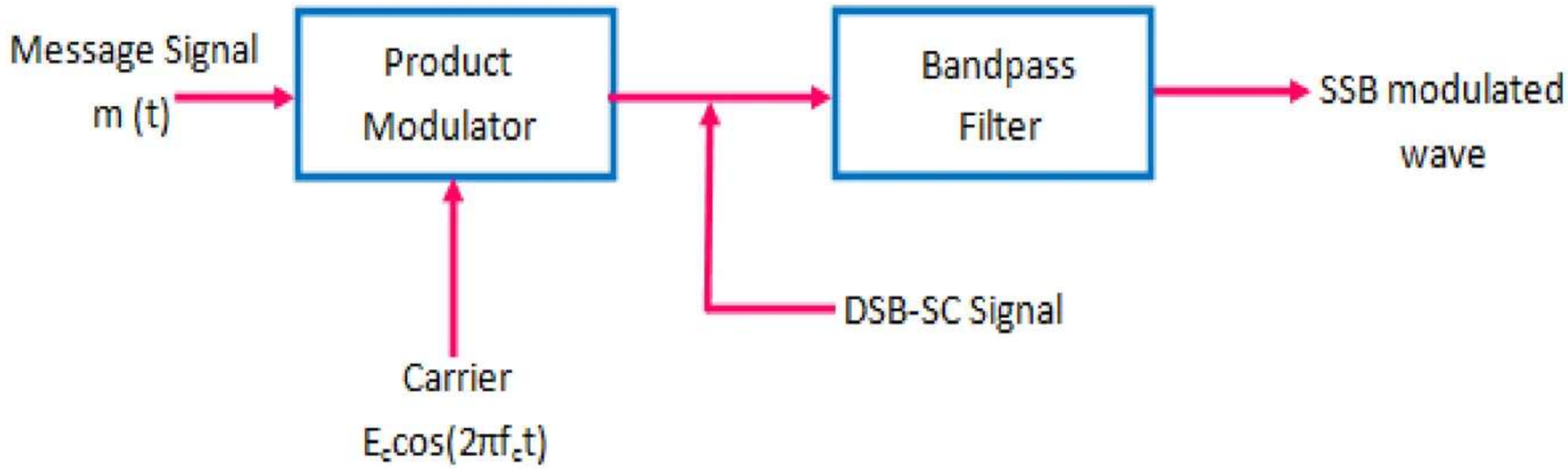

Filter method of generating DSB-SC Signal requires product modulator and BPF as shown in figure.

Here Product Modulator generates DSB-SC Signal which contains two side bands i.e USB & LSB.

By passing DSB-SC Signal through BPF either of sidebands are removed for generating SSB-SC Signal.

Generation of SSB-SC

2.Phase Shift or Phase Discrimination Method:

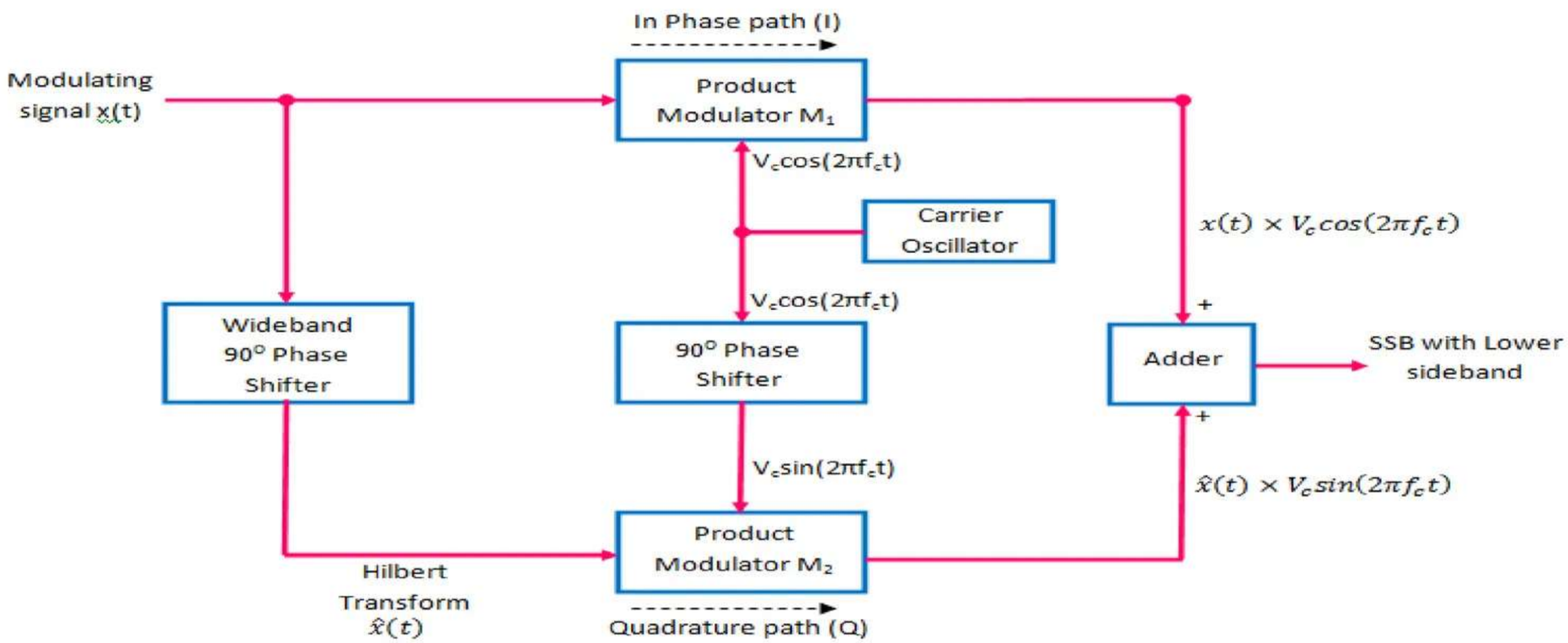

The figure shows the block diagram for the phase shift method of SSB generation and this system is used for the suppression of lower sideband.

This system uses two Product modulators M_1 and M_2 and two 90° phase shifting networks.

Vestigial Sideband Transmission

- VSB-SC is used to transmit Video Signal which is large BW signal containing very low and very high frequency components.
- Very low Frequencies raise sidebands near to carrier frequency.
- It is not possible to suppress one complete sideband.
- Very low frequencies contain most of useful information, any effect to complete suppress the one sideband would result phase distortion at these frequencies.
- Therefore compromise has been made to suppress the part of sideband. Hence VSB-SC Signal contain one full sideband & part of other side band.

VSB Modulation & Demodulation

Modulation:

Modulating signal x(t) and carrier signal c(t) are applied as inputs to the product modulator.

$$S(t) = x(t)c(t)$$

This is the DSB-SC wave. It is applied to a side band filter which passes the wanted sideband completely and vestige of unwanted sideband.

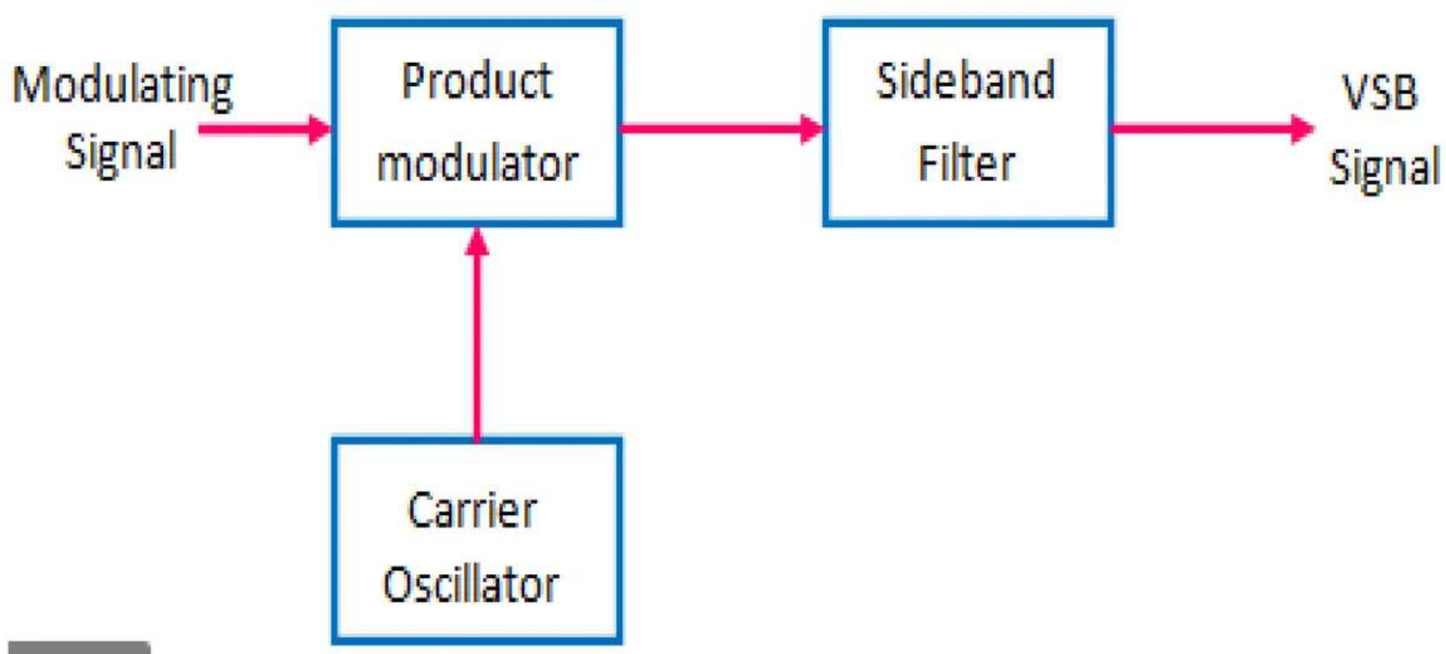

VSB Modulation & Demodulation

Demodulation:

The demodulation of VSB signal can be achieved using a coherent detector by multiplying s(t) with a locally generated carrier.

$$V(t) = s(t)A_c\cos 2\pi f_c t$$
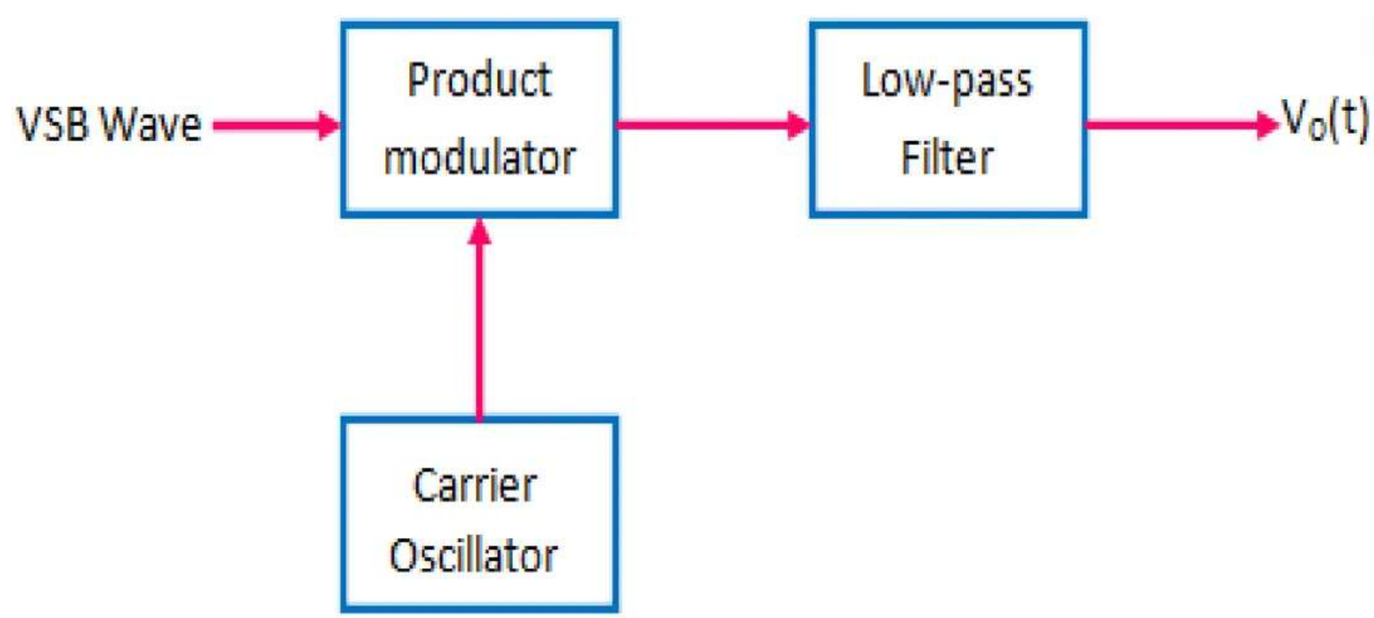
This signal is then passed through a LPF which passes low frequency message signal and rejects carrier.