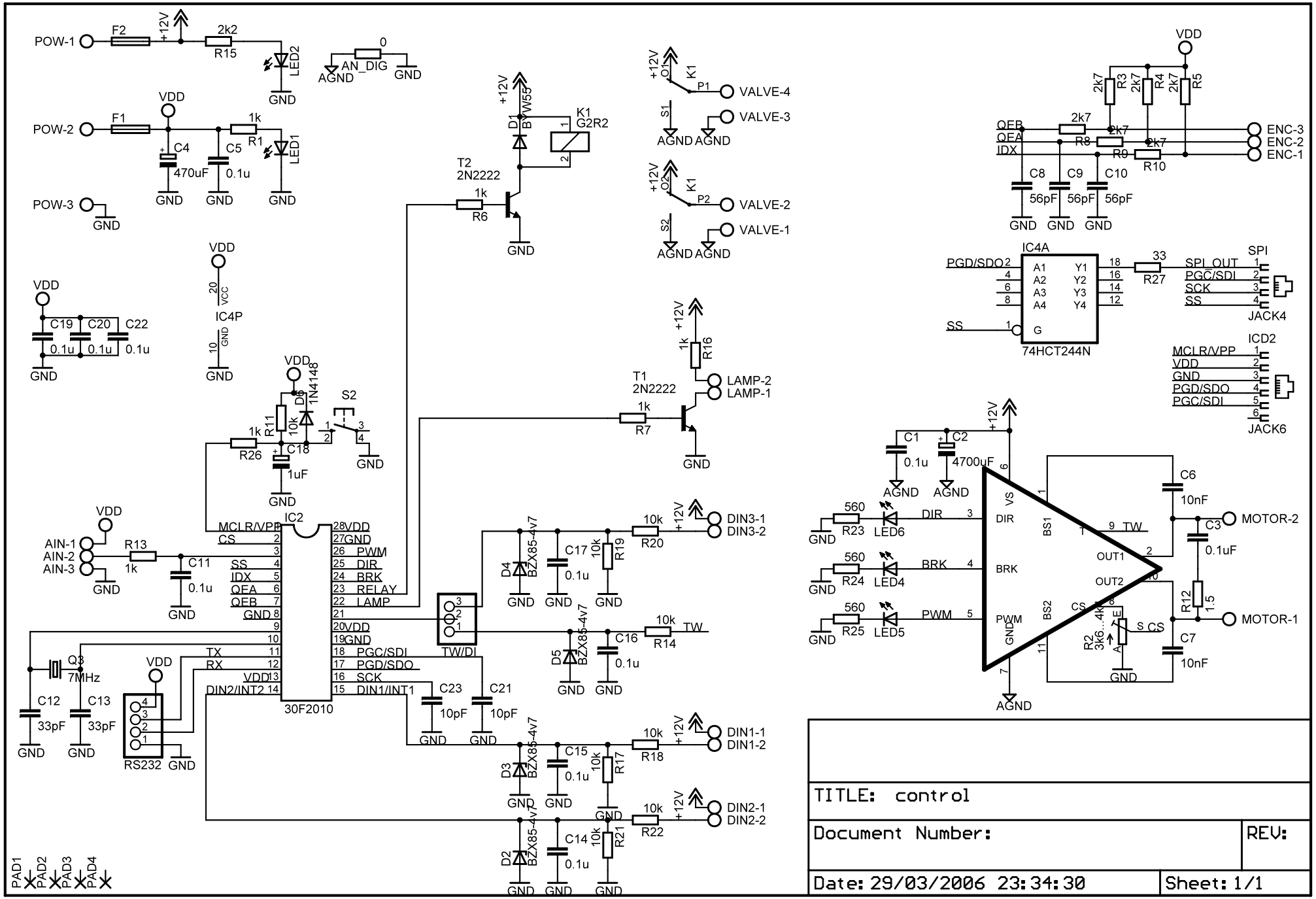
POW-1
F2
+12V
2k2
R15
LED2
GND
0
AN_DIG
AGND
GND
POW-2
F1
VDD
1k
R1
LED1
C4
470uF
C5
0.1u
POW-3
+12V
D1
BYW55
K1
G2R2
T2
2N2222
1k
R6
+12V
O1
K1
P1
VALVE-4
S1
VALVE-3
AGND AGND
+12V
O2
K1
P2
VALVE-2
S2
VALVE-1
AGND AGND
VDD
2k7
R3
R4
R5
QEB
QEA
IDX
R8
R9
R10
ENC-3
ENC-2
ENC-1
C8
C9
C10
56pF
IC4A
PGD/SDO
SS
A1
A2
A3
A4
G
Y1
Y2
Y3
Y4
74HCT244N
33
R27
SPI_OUT
PGC/SDI
SCK
SS
SPI
JACK4
ICD2
MCLR/VPP
VDD
GND
PGD/SDO
PGC/SDI
JACK6
VDD
C19
C20
C22
0.1u
IC4P
VCC
GND
+12V
1k
R16
T1
2N2222
LAMP-2
LAMP-1
1k
R7
VDD
D6
1N4148
S2
1k
R11
10k
R26
C18
1uF
IC2
MCLR/VPP
CS
SS
IDX
QEA
QEB
GND
TX
RX
VDD
DIN2/INT2
VDD
GND
PWM
DIR
BRK
RELAY
LAMP
VDD
GND
PGC/SDI
PGD/SDO
SCK
DIN1/INT1
30F2010
AIN-1
AIN-2
AIN-3
R13
1k
C11
0.1u
Q3
7MHz
C12
33pF
C13
33pF
RS232
TW/DI
D4
BZX85-4v7
C17
0.1u
10k
R19
R20
DIN3-1
DIN3-2
D5
BZX85-4v7
C16
R14
TW
C23
10pF
C21
10pF
D3
BZX85-4v7
C15
R17
R18
DIN1-1
DIN1-2
D2
BZX85-4v7
C14
R21
R22
DIN2-1
DIN2-2
PAD1
PAD2
PAD3
PAD4
C1
0.1u
C2
4700uF
AGND
560
R23
LED6
DIR
R24
LED4
BRK
R25
LED5
PWM
VS
BS1
BS2
OUT1
OUT2
CS
S_CS
R2
3k6...4k7
C6
10nF
C3
0.1uF
R12
1.5
C7
10nF
MOTOR-2
MOTOR-1
TITLE: control
Document Number:
REV:
Date: 29/03/2006 23:34:30
Sheet: 1/1