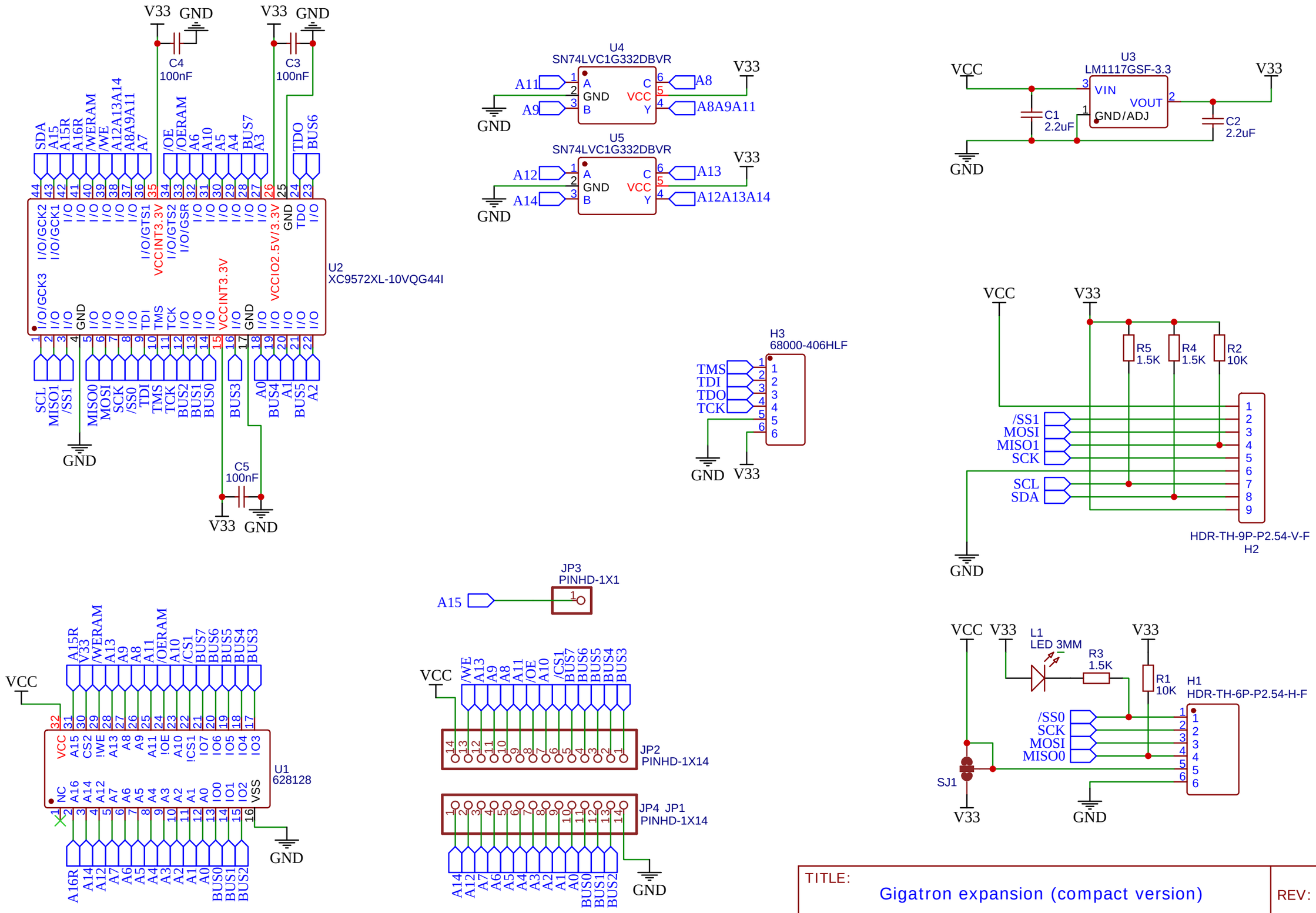

TITLE: Gigatron expansion (compact version)	REV: 1.0
Company: lb3361	Sheet: 1/1
Date: 2021-02-23 Drawn By: lb3361	

EasyEDA