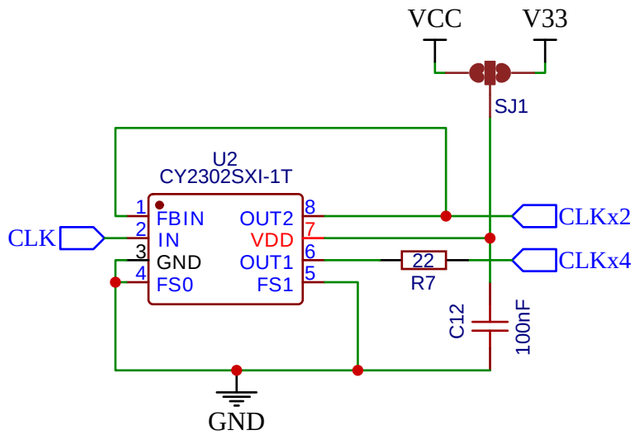

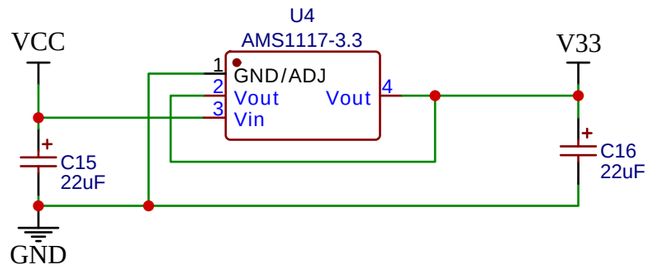

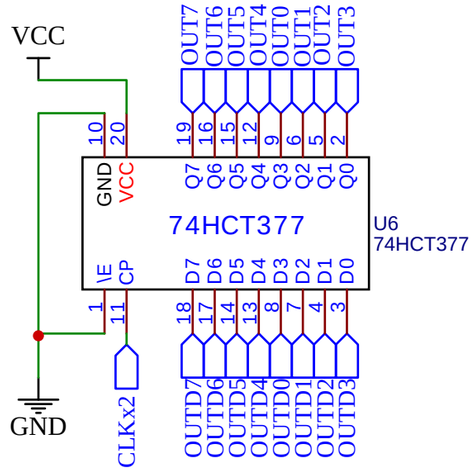

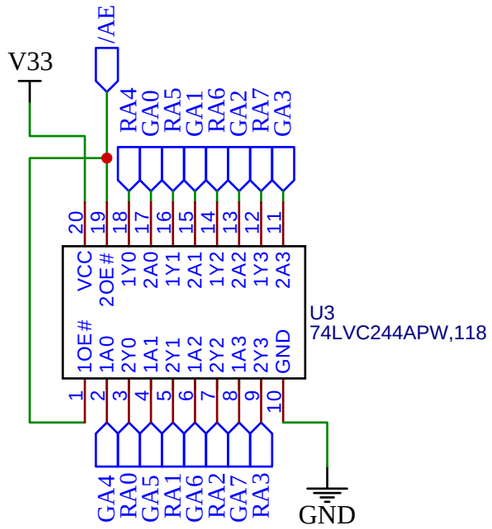

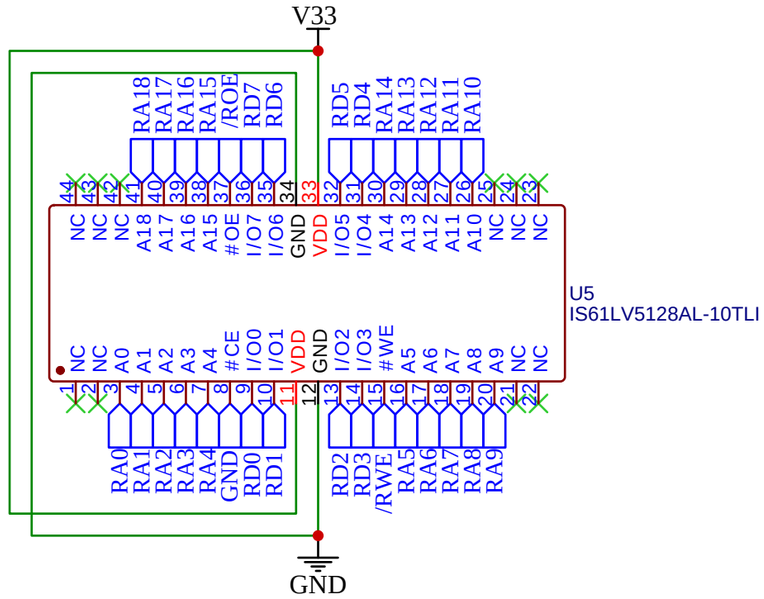

TITLE: Gigatron Expansion v8 - Chips		REV: v8c2
EasyEDA	Company: n/a	Sheet: 1/3
	Date: 2021-11-05 Drawn By: lb3361	

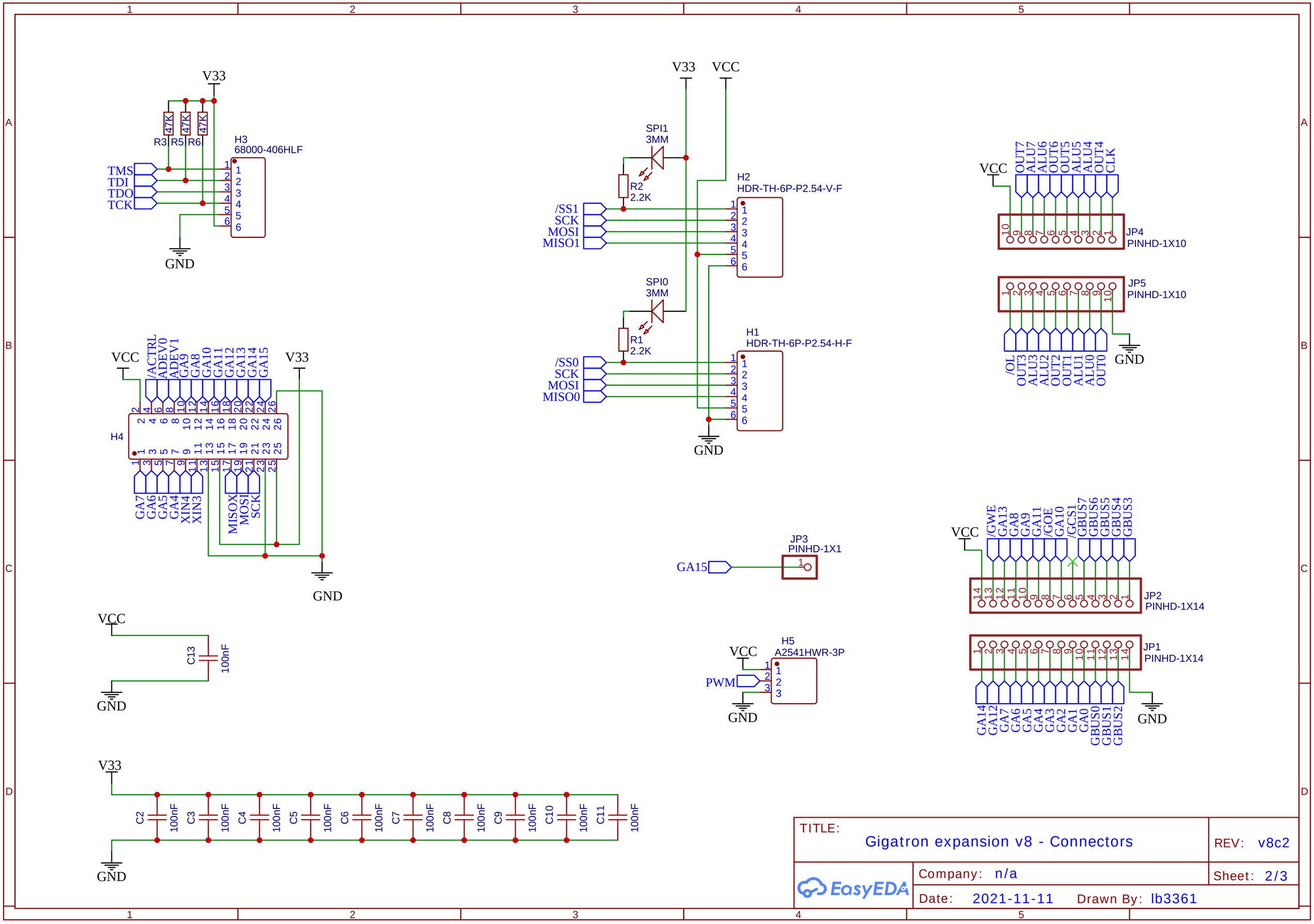

TITLE: Gigatron expansion v8 - Connectors	REV: v8c2
Company: n/a	Sheet: 2/3
Date: 2021-11-11 Drawn By: lb3361	

EasyEDA

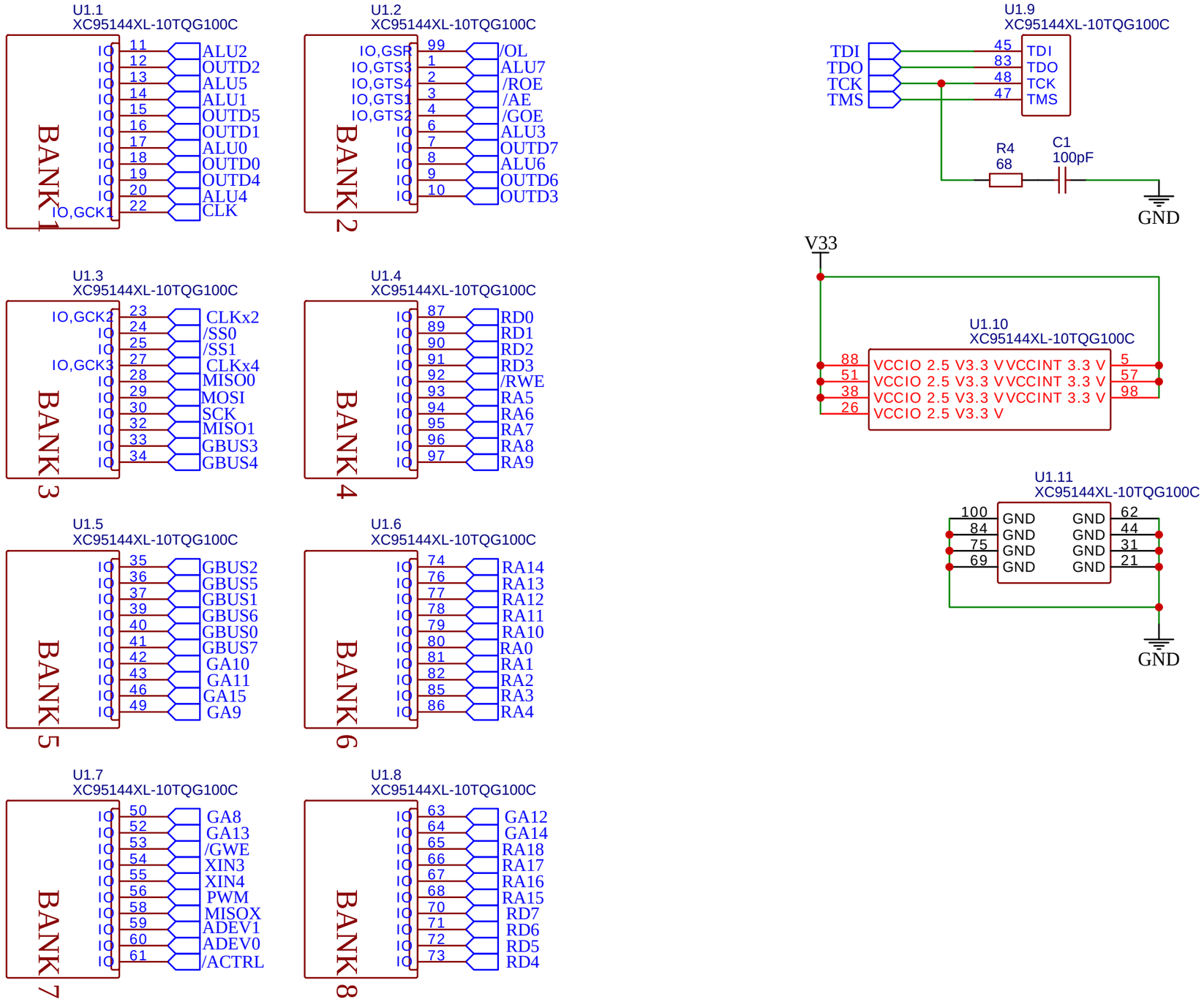

TITLE: Sheet_1	REV: v8c2
EasyEDA Company: Your Company	Sheet: 3/3
Date: 2021-11-29 Drawn By: lb3361	