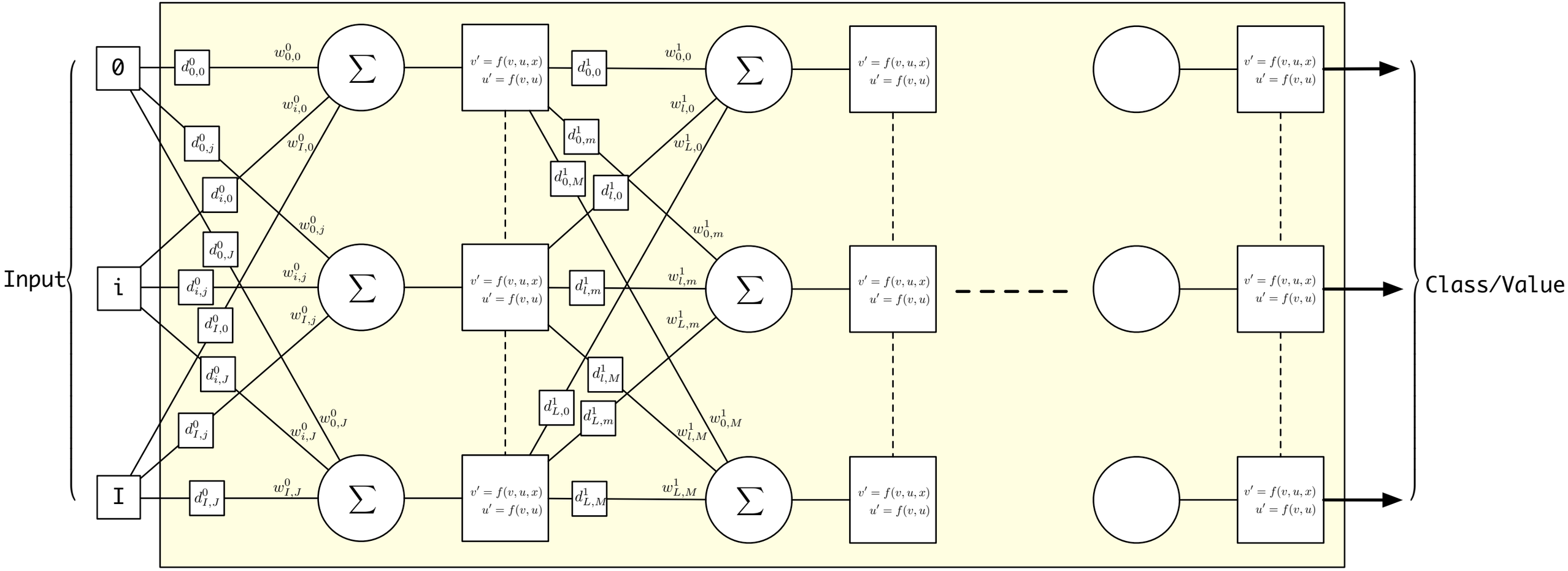
Input
0
i
I
$d^0_{0,0}$
$d^0_{0,j}$
$d^0_{i,0}$
$d^0_{0,J}$
$d^0_{i,j}$
$d^0_{I,0}$
$d^0_{i,J}$
$d^0_{I,j}$
$d^0_{I,J}$
$w^0_{0,0}$
$w^0_{i,0}$
$w^0_{I,0}$
$w^0_{0,j}$
$w^0_{i,j}$
$w^0_{I,j}$
$w^0_{0,J}$
$w^0_{i,J}$
$w^0_{I,J}$
Σ
$v' = f(v, u, x)$
$u' = f(v, u)$
$d^1_{0,0}$
$d^1_{0,m}$
$d^1_{0,M}$
$d^1_{l,0}$
$d^1_{l,m}$
$d^1_{l,M}$
$d^1_{L,0}$
$d^1_{L,m}$
$d^1_{L,M}$
$w^1_{0,0}$
$w^1_{l,0}$
$w^1_{L,0}$
$w^1_{0,m}$
$w^1_{l,m}$
$w^1_{L,m}$
$w^1_{0,M}$
$w^1_{l,M}$
$w^1_{L,M}$
Class/Value