Generation Interconnection

Impact Study Report

for

Queue Project AE1-113

"MOLE CREEK 345 KV"

300 MW Energy /66 MW Capacity

December 2020

Table of Contents

1 Introduction 5
2 Preface 5
3 General 5
4 Point of Interconnection 6
5 Cost Summary 6
6 Transmission Owner Scope of Work 7
7 Schedule 8
8 Transmission Owner Analysis 8
9 Interconnection Customer Requirements 8
10 Revenue Metering and SCADA Requirements 8
10.1 PJM Requirements 8
10.2 ComEd Requirements 9
11 Summer Peak Analysis 9
11.1 Generation Deliverability 9
11.2 Multiple Facility Contingency 9
11.3 Contribution to Previously Identified Overloads 9
11.4 Potential Congestion due to Local Energy Deliverability 11
11.5 System Reinforcements 12
11.6 Flow Gate Details 25
11.6.1 Index 1 25
11.6.2 Index 2 26
11.6.3 Index 3 30
11.6.4 Index 4 33
11.6.5 Index 5 37
11.6.6 Index 6 38
11.6.7 Index 7 42
11.6.8 Index 8 43
11.6.9 Index 9 44
11.6.10 Index 10 47
11.6.11 Index 11 48
11.6.12 Index 12 51

© PJM Interconnection 2020. All rights reserved

11.6.13 Index 13 55
11.6.14 Index 14 58
11.6.15 Index 15 62
11.6.16 Index 16 63
11.6.17 Index 17 67
11.6.18 Index 18 70
11.6.19 Index 19 71
11.6.20 Index 20 75
11.6.21 Index 21 78
11.7 Queue Dependencies 80
11.8 Contingency Descriptions 83
12 Light Load Analysis 87
12.1 Generation Deliverability 87
12.2 Multiple Facility Contingency 87
12.3 Contribution to Previously Identified Overloads 87
12.4 Potential Congestion due to Local Energy Deliverability 88
12.5 System Reinforcements 88
12.6 Flow Gate Details 89
12.6.1 Index 5 89
12.6.2 Index 6 93
12.6.3 Index 7 96
12.6.4 Index 8 98
12.6.5 Index 9 101
13 Queue Dependencies 103
13.1 Contingency Descriptions 106
14 Short Circuit Analysis 107
14.1 System Reinforcements - Short Circuit 107
15 Stability and Reactive Power 107
16 Affected Systems 107
16.1 LG&E 107
16.2 MISO 107
16.3 TVA 107
16.4 Duke Energy Progress 108

© PJM Interconnection 2020. All rights reserved

16.5 NYISO 108
17 Attachment 1: One Line Diagram 109

© PJM Interconnection 2020. All rights reserved

1 Introduction

This System Impact Study has been prepared in accordance with the PJM Open Access Transmission Tariff, 205, as well as the System Impact Study Agreement between the Interconnection Customer (IC), and PJM Interconnection, LLC (PJM), Transmission Provider (TP). The Interconnected Transmission Owner (ITO) is ComEd.

2 Preface

The intent of the System Impact Study is to determine a plan, with approximate cost and construction time estimates, to connect the subject generation interconnection project to the PJM network at a location specified by the Interconnection Customer. As a requirement for interconnection, the Interconnection Customer may be responsible for the cost of constructing: Network Upgrades, which are facility additions, or upgrades to existing facilities, that are needed to maintain the reliability of the PJM system. All facilities required for interconnection of a generation interconnection project must be designed to meet the technical specifications (on PJM web site) for the appropriate transmission owner.

In some instances an Interconnection Customer may not be responsible for 100% of the identified network upgrade cost because other transmission network uses, e.g. another generation interconnection or merchant transmission upgrade, may also contribute to the need for the same network reinforcement. The possibility of sharing the reinforcement costs with other projects may be identified in the Feasibility Study, but the actual allocation will be deferred until the System Impact Study is performed.

The System Impact Study estimates do not include the feasibility, cost, or time required to obtain property rights and permits for construction of the required facilities. The project developer is responsible for the right of way, real estate, and construction permit issues. For properties currently owned by Transmission Owners, the costs may be included in the study.

The Interconnection Customer seeking to interconnect a wind or solar generation facility shall maintain meteorological data facilities as well as provide that meteorological data which is required per Schedule H to the Interconnection Service Agreement and Section 8 of Manual 14D.

An Interconnection Customer with a proposed new Customer Facility that has a Maximum Facility Output equal to or greater than 100 MW shall install and maintain, at its expense, phasor measurement units (PMUs). See Section 8.5.3 of Appendix 2 to the Interconnection Service Agreement as well as section 4.3 of PJM Manual 14D for additional information.

3 General

The Interconnection Customer (IC), has proposed a wind generating facility to be located in Woodford County, Illinois. The installed facilities will have a total capability of 300 MW with 66 MW of this output being recognized by PJM as Capacity. The proposed in-service date for this project will need be determined during the Facilities Study phase.

© PJM Interconnection 2020. All rights reserved

Queue Number	AE1-113
Project Name	MOLE CREEK 345 KV
Interconnection Customer	TGE Illinois 181, LLC
State	Illinois
County	Woodford
Transmission Owner	ComEd
MFO	300
MWE	300
MWC	66
Fuel	Wind
Basecase Study Year	2022

4 Point of Interconnection

AE1-113 will interconnect with the ComEd transmission system at the Mole Creek B 345 kV Substation.

5 Cost Summary

The AE1-113 project will be responsible for the following costs:

Description	Total Cost
Attachment Facilities	$1,000,000
Direct Connection Network Upgrade	$0
Non Direct Connection Network Upgrades	$4,000,000
Total Costs	**$5,000,000**

In addition, the AE1-113 project may be responsible for a contribution to the following costs

Description	Total Cost
Allocation toward System Network Upgrade Costs (Summer Peak and Light Load)	**$34,708,585**

Cost allocations for network upgrades are provided in Section 16. As the AE1-113 project progress through the study process, projects may withdraw, which may result in changes to your cost allocation.
This cost excludes a Federal Income Tax Gross Up charges. This tax may or may not be charged based on whether this project meets the eligibility requirements of IRS Notice 88-129. If at a future date it is determined that the Federal Income Tax Gross charge is required, the Transmission Owner shall be reimbursed by the Interconnection Customer for such taxes.

Note 1: PJM Open Access Transmission Tariff (OATT) section 217.3A outline cost allocation rules. The rules are further clarified in PJM Manual 14A Attachment B. The allocation of costs for a network upgrade will start with the first Queue project to cause the need for the upgrade. Later queue projects will receive cost allocation contingent on their contribution to the violation and are allocated to the queues that have not

© PJM Interconnection 2020. All rights reserved

closed less than 5 years following the execution of the first Interconnection Service Agreement which identifies the need for this upgrade.

Note 2: For customers with System Reinforcements listed: If your present cost allocation to a System Reinforcement indicates $0, then please be aware that as changes to the interconnection process occur, such as prior queued projects withdrawing from the queue, reducing in size, etc, the cost responsibilities can change and a cost allocation may be assigned to your project. In addition, although your present cost allocation to a System Reinforcement is presently $0, your project may need this system reinforcement completed to be deliverable to the PJM system. If your project comes into service prior to completion of the system reinforcement, an interim deliverability study for your project will be required.

6 Transmission Owner Scope of Work

Attachment Facilities

The total preliminary cost estimate for the attachment work is given in the table below. These costs do not include CIAC Tax Gross-up.

Description	Total Cost
Installation of one 345kV line MOD, one dead-end structure and one set of revenue metering (see notes below on cost estimate)	$1,000,000
Total Attachment Facility Costs	**$1,000,000**

Direct Connection Cost Estimate

The total preliminary cost estimate for the Direct Connection work is given in the table below. These costs do not include CIAC Tax Gross-up.

Description	Total Cost
None	$0

Non-Direct Connection Cost Estimate

The total preliminary cost estimate for the Non-Direct Connection work is given in the table below. These costs do not include CIAC Tax Gross-up.

In order to accommodate interconnection of AE1-113, Mole Creek TSS 908 would need to be expanded to create a bus position.

The scope of work includes installation of one 345kV circuit breaker and relocating termination of 345kV line 1202 at TSS 908 Mole Creek, as shown in the one-line diagram below.

ComEd would design, engineer and construct expansion of Mole Creek TSS 908.

© PJM Interconnection 2020. All rights reserved

Description	Total Cost
Installation of one 345kV circuit breakers and relocating termination of 345kV line 1202 at TSS 908 Mole Creek	$4,000,000
Total Non-Direct Connection Facility Costs	**$4,000,000**

Notes on Cost Estimate:

1) These estimates are Order-of-Magnitude estimates of the costs that ComEd would bill to the customer for this interconnection. These estimates are based on a one-line electrical diagram of the project and the information provided by the IC.

2) There were no site visits performed for these estimates. There may be costs related to specific site related issues that are not identified in these estimates. The site reviews will be performed during the Facilities Study or during detailed engineering.

3) These estimates are not a guarantee of the maximum amount payable by the IC and the actual costs of ComEd's work may differ significantly from these estimates. The IC will be responsible for paying actual costs of ComEd's work in accordance with Sections 212.1 and 217 of the PJM Open Access Transmission Tariff.

4) The IC is responsible for all engineering, procurement, testing and construction of all equipment on the IC's side of the POI.

5) These cost estimates do not include cost of acquiring right-of-way for the transmission line and purchasing any additional land, if needed, for the line terminations. The need and cost of acquiring property and associated legal costs will be investigated during Facilities Study for this project.

7 Schedule

ComEd would take approximately 24-months to construct the substation and transmission line work after the ISA / ICSA are signed. See Section 11.5 for Network Upgrade schedules.

8 Transmission Owner Analysis

See Section 6.

9 Interconnection Customer Requirements

The Interconnection Customer is responsible for all design and construction related activities on the Interconnection Customer's side of the Point of Interconnection.

10 Revenue Metering and SCADA Requirements

10.1 PJM Requirements

The Interconnection Customer will be required to install equipment necessary to provide Revenue Metering (KWH, KVARH) and real time data (KW, KVAR) for IC's generating Resource. See PJM Manuals M-01 and M-14D, and PJM Tariff Section 8 of Attachment O.

© PJM Interconnection 2020. All rights reserved

10.2 ComEd Requirements

The IC will be required to comply with all Interconnected Transmission Owner's revenue metering requirements for generation interconnection customers located at the following link:

ComEd interconnection requirements can be found at https://www.pjm.com/planning/design-engineering/to-tech-standards/private-comed.aspx

To the extent that these Applicable Technical Requirements and Standards may conflict with the terms and conditions of the Tariff, the Tariff shall control.

11 Summer Peak Analysis

The Queue Project AE1-113 was evaluated as a 300.0 MW (Capacity 66.0 MW) injection into the Mole Creek; B 345 kV substation in the ComEd area. Project AE1-113 was evaluated for compliance with applicable reliability planning criteria (PJM, NERC, NERC Regional Reliability Councils, and Transmission Owners). Project AE1-113 was studied with a commercial probability of 1.00. Potential network impacts were as follows:

11.1 Generation Deliverability

(Single or N-1 contingencies for the Capacity portion only of the interconnection)

ID	FROM BUS#	FROM BUS	kV	FROM BUS AREA	TO BUS#	TO BUS	kV	TO BUS AREA	CKT ID	CONT NAME	Type	Rating MVA	PRE PROJECT LOADING %	POST PROJECT LOADING %	AC|DC	MW IMPACT
51315624	270737	ELWOOD ; R	345.0	CE	270769	GOODINGS ;2R	345.0	CE	1	COMED_P1-2_345-L2311__R-S	single	1479.0	99.78	100.14	AC	5.23

11.2 Multiple Facility Contingency

(Double Circuit Tower Line, Fault with a Stuck Breaker, and Bus Fault contingencies for the full energy output)

None

11.3 Contribution to Previously Identified Overloads

(This project contributes to the following contingency overloads, i.e. "Network Impacts", identified for earlier generation or transmission interconnection projects in the PJM Queue)

ID	FROM BUS#	FROM BUS	kV	FROM BUS AREA	TO BUS#	TO BUS	kV	TO BUS AREA	CKT ID	CONT NAME	Type	Rating MVA	PRE PROJECT LOADING %	POST PROJECT LOADING %	AC|DC	MW IMPACT
688076	270716	DRESDEN ; B	345.0	CE	275179	DRESDEN ;1M	138.0	CE	1	COMED_P4_012-45-BT5-6__	breaker	442.0	123.09	131.49	AC	36.61
689434	270716	DRESDEN ; B	345.0	CE	274702	KENDALL ;BU	345.0	CE	1	COMED_P7_345-L11620_B-S_+_345-L11622_R-S	tower	1195.0	110.68	114.27	DC	50.07

© PJM Interconnection 2020. All rights reserved

ID	FROM BUS#	FROM BUS	kV	FROM BUS AREA	TO BUS#	TO BUS	kV	TO BUS AREA	CKT ID	CONT NAME	Type	Rating MVA	PRE PROJECT LOADING %	POST PROJECT LOADING %	AC|DC	MW IMPACT
688333	270728	E FRANKFO;B	345.0	CE	274750	CRETE EC ;BP	345.0	CE	1	AEP_P4_#2978_05DUMONT 765_B	breaker	1399.0	110.05	110.08	AC	38.95
688334	270728	E FRANKFO;B	345.0	CE	274750	CRETE EC ;BP	345.0	CE	1	COMED_P4_023-65-BT2-3__	breaker	1399.0	111.1	111.13	AC	39.14
688335	270728	E FRANKFO;B	345.0	CE	274750	CRETE EC ;BP	345.0	CE	1	COMED_P4_112-65-BT4-5__	breaker	1399.0	110.9	110.93	AC	39.13
688336	270728	E FRANKFO;B	345.0	CE	274750	CRETE EC ;BP	345.0	CE	1	COMED_P4_112-65-BT3-4__	breaker	1399.0	110.89	110.92	AC	39.13
687737	270736	ELWOOD ; B	345.0	CE	270770	GOODINGS ;4B	345.0	CE	1	COMED_P2-2_116_GG-345R__2_NO_FSA	bus	1479.0	115.37	116.92	AC	26.98
687738	270736	ELWOOD ; B	345.0	CE	270770	GOODINGS ;4B	345.0	CE	1	COMED_P2-2_116_GG-345R__2_FSA	bus	1479.0	115.33	116.88	AC	26.98
688295	270736	ELWOOD ; B	345.0	CE	270770	GOODINGS ;4B	345.0	CE	1	COMED_P4_116-45-L11614_	breaker	1479.0	116.29	117.84	AC	26.96
688296	270736	ELWOOD ; B	345.0	CE	270770	GOODINGS ;4B	345.0	CE	1	COMED_P4_116-45-L9801_FSA	breaker	1479.0	115.37	116.92	AC	26.98
688297	270736	ELWOOD ; B	345.0	CE	270770	GOODINGS ;4B	345.0	CE	1	COMED_P4_116-45-TR82___	breaker	1479.0	115.37	116.92	AC	26.98
687710	270737	ELWOOD ; R	345.0	CE	270769	GOODINGS ;2R	345.0	CE	1	COMED_P2-2_116_GG-345B__4	bus	1479.0	117.5	119.32	AC	31.52
688255	270737	ELWOOD ; R	345.0	CE	270769	GOODINGS ;2R	345.0	CE	1	COMED_P4_116-45-L11613_	breaker	1479.0	118.39	120.21	AC	31.48
688256	270737	ELWOOD ; R	345.0	CE	270769	GOODINGS ;2R	345.0	CE	1	COMED_P4_116-45-L11617_	breaker	1479.0	117.5	119.32	AC	31.52
688257	270737	ELWOOD ; R	345.0	CE	270769	GOODINGS ;2R	345.0	CE	1	COMED_P4_116-45-TR84___	breaker	1479.0	117.5	119.32	AC	31.52
687715	270770	GOODINGS ;4B	345.0	CE	270766	GOODINGS ;3B	345.0	CE	1	COMED_P2-2_116_GG-345R__2_NO_FSA	bus	1802.0	107.82	110.09	AC	48.2
687716	270770	GOODINGS ;4B	345.0	CE	270766	GOODINGS ;3B	345.0	CE	1	COMED_P2-2_116_GG-345R__2_FSA	bus	1802.0	106.99	109.26	AC	48.21
688231	270770	GOODINGS ;4B	345.0	CE	270766	GOODINGS ;3B	345.0	CE	1	COMED_P4_116-45-L11614_	breaker	1802.0	112.28	114.55	AC	48.08
688232	270770	GOODINGS ;4B	345.0	CE	270766	GOODINGS ;3B	345.0	CE	1	COMED_P4_116-45-L9801_FSA	breaker	1802.0	107.82	110.09	AC	48.2
688233	270770	GOODINGS ;4B	345.0	CE	270766	GOODINGS ;3B	345.0	CE	1	COMED_P4_116-45-TR82___	breaker	1802.0	107.82	110.09	AC	48.2
688234	270770	GOODINGS ;4B	345.0	CE	270766	GOODINGS ;3B	345.0	CE	1	COMED_P4_112-45-BT4-5__	breaker	1802.0	101.49	103.89	AC	50.85
361901	270771	GREENACRE; T	345.0	CE	243229	05OLIVE	345.0	AEP	1	AEP_P4_#2978_05DUMONT 765_B	breaker	971.0	109.73	110.9	AC	24.32
689445	270855	POWERTON ; R	345.0	CE	349662	7TAZEWELL	345.0	AMIL	1	COMED_P7_345-L19601_B-S_+_345-L9801__R-S_FSA	tower	1479.0	101.79	110.5	AC	132.37
688039	270926	WILTON ; B	345.0	CE	275232	WILTON ;3M	345.0	CE	1	COMED_P4_112-65-BT5-6__	breaker	1379.0	124.98	127.84	AC	44.48
688042	270927	WILTON ; R	345.0	CE	275233	WILTON ;4M	345.0	CE	1	COMED_P4_112-65-BT2-3__	breaker	1379.0	127.55	130.47	AC	45.43
687747	274702	KENDALL ;BU	345.0	CE	270810	LOCKPORT ; B	345.0	CE	1	COMED_P2-2_111_EJ-345B__2	bus	1479.0	103.79	107.27	AC	51.76
688314	274702	KENDALL ;BU	345.0	CE	270810	LOCKPORT ; B	345.0	CE	1	COMED_P4_111-45-L16704T	breaker	1479.0	104.13	107.6	AC	51.72
688315	274702	KENDALL ;BU	345.0	CE	270810	LOCKPORT ; B	345.0	CE	1	COMED_P4_111-45-L11126_	breaker	1479.0	103.85	107.32	AC	51.76
689493	274702	KENDALL ;BU	345.0	CE	270810	LOCKPORT ; B	345.0	CE	1	COMED_P7_345-L11620_B-S_+_345-L11622_R-S	tower	1768.0	103.16	106.17	AC	49.09
688066	274750	CRETE EC ;BP	345.0	CE	255112	17STJOHN	345.0	NIPS	1	AEP_P4_#2978_05DUMONT 765_B	breaker	1399.0	106.58	108.86	AC	38.47

© PJM Interconnection 2020. All rights reserved

ID	FROM BUS#	FROM BUS	kV	FROM BUS AREA	TO BUS#	TO BUS	kV	TO BUS AREA	CKT ID	CONT NAME	Type	Rating MVA	PRE PROJECT LOADING %	POST PROJECT LOADING %	AC|DC	MW IMPACT
688068	274750	CRETE EC ;BP	345.0	CE	255112	17STJOHN	345.0	NIPS	1	COMED_P4_112-65-BT4-5__	breaker	1399.0	105.98	108.27	AC	38.65
688069	274750	CRETE EC ;BP	345.0	CE	255112	17STJOHN	345.0	NIPS	1	COMED_P4_112-65-BT3-4__	breaker	1399.0	105.98	108.26	AC	38.65
361770	274804	UNIV PK N;RP	345.0	CE	243229	05OLIVE	345.0	AEP	1	AEP_P4_#2978_05DUMONT 765_B	breaker	971.0	110.57	113.22	AC	29.25
361771	274804	UNIV PK N;RP	345.0	CE	243229	05OLIVE	345.0	AEP	1	COMED_P4_023-65-BT2-3__	breaker	971.0	109.34	112.01	AC	29.47
361772	274804	UNIV PK N;RP	345.0	CE	243229	05OLIVE	345.0	AEP	1	COMED_P4_112-65-BT4-5__	breaker	971.0	109.33	112.0	AC	29.47
361773	274804	UNIV PK N;RP	345.0	CE	243229	05OLIVE	345.0	AEP	1	COMED_P4_112-65-BT3-4__	breaker	971.0	109.33	112.0	AC	29.47
361774	274804	UNIV PK N;RP	345.0	CE	243229	05OLIVE	345.0	AEP	1	COMED_P4_023-65-BT4-5__	breaker	971.0	109.32	111.99	AC	29.47
688081	275179	DRESDEN ;1M	138.0	CE	271337	DRESDEN ; R	138.0	CE	1	COMED_P4_012-45-BT5-6__	breaker	442.0	120.63	128.78	AC	36.61
688038	275232	WILTON ;3M	345.0	CE	270644	WILTON ;	765.0	CE	1	COMED_P4_112-65-BT5-6__	breaker	1379.0	124.86	127.73	AC	44.48
688041	275233	WILTON ;4M	345.0	CE	270644	WILTON ;	765.0	CE	1	COMED_P4_112-65-BT2-3__	breaker	1379.0	127.43	130.36	AC	45.43
689257	930740	AB1-122 TAP	345.0	CE	270717	DRESDEN ; R	345.0	CE	1	COMED_P7_345-L19601_B-S_+_345-L9801__R-S_FSA	tower	1195.0	119.82	122.87	AC	36.44
423271	930740	AB1-122 TAP	345.0	CE	270717	DRESDEN ; R	345.0	CE	1	COMED_P7_345-L0301__B-S_+_345-L9801__R-S_FSA	tower	1195.0	113.03	115.77	AC	36.46
	346809	7CASEY	345.0	AMIL	247712	05SULLIVAN	345.0	AEP	1	'AEP_P4_#3128_05EUGENE 345_A2'	breaker	1466.0	112.09	113.39	AC	20.2
	255113	17STILLWELL	345.0	NIPS	243219	05DUMONT	345.0	AEP	1	'AEP_P4_#2978_05DUMONT 765_B'	breaker	1409	130.26	132.17	AC	41.9

11.4 Potential Congestion due to Local Energy Deliverability

PJM also studied the delivery of the energy portion of this interconnection request. Any problems identified below are likely to result in operational restrictions to the project under study. The developer can proceed with network upgrades to eliminate the operational restriction at their discretion by submitting a Merchant Transmission Interconnection request.

Note: Only the most severely overloaded conditions are listed below. There is no guarantee of full delivery of energy for this project by fixing only the conditions listed in this section. With a Transmission Interconnection Request, a subsequent analysis will be performed which shall study all overload conditions associated with the overloaded element(s) identified.

ID	FROM BUS#	FROM BUS	kV	FROM BUS AREA	TO BUS#	TO BUS	kV	TO BUS AREA	CKT ID	CONT NAME	Type	Rating MVA	PRE PROJECT LOADING %	POST PROJECT LOADING %	AC|DC	MW IMPACT
689091	255104	17GREEN_ACRE	345.0	NIPS	270771	GREENACRE; T	345.0	CE	1	AEP_P1-2_#695A	operation	1091.0	100.4	101.26	AC	24.58
689049	270716	DRESDEN ; B	345.0	CE	275179	DRESDEN ;1M	138.0	CE	1	COMED_P1-2_345-L10805_B-S	operation	442.0	104.57	107.98	AC	17.98
689048	270728	E FRANKFO; B	345.0	CE	274750	CRETE EC ;BP	345.0	CE	1	AEP_P1-2_#695A	operation	1399.0	110.85	110.88	AC	39.11

© PJM Interconnection 2020. All rights reserved

ID	FROM BUS#	FROM BUS	kV	FROM BUS AREA	TO BUS#	TO BUS	kV	TO BUS AREA	CKT ID	CONT NAME	Type	Rating MVA	PRE PROJECT LOADING %	POST PROJECT LOADING %	AC|DC	MW IMPACT
688920	270736	ELWOOD ; B	345.0	CE	270770	GOODINGS ;4B	345.0	CE	1	COMED_P1-2_345-L11622_R-S	operation	1479.0	111.23	112.66	AC	25.01
688909	270737	ELWOOD ; R	345.0	CE	270769	GOODINGS ;2R	345.0	CE	1	COMED_P1-2_345-L11620_B-S	operation	1479.0	112.57	114.1	AC	26.68
688913	270737	ELWOOD ; R	345.0	CE	270769	GOODINGS ;2R	345.0	CE	1	Base Case	operation	1201.0	102.64	104.09	AC	20.41
362705	270771	GREENACRE; T	345.0	CE	243229	05OLIVE	345.0	AEP	1	AEP_P1-2_#695A	operation	971.0	112.81	113.78	AC	24.58
688849	270855	POWERTON ; R	345.0	CE	349662	7TAZEWELL	345.0	AMIL	1	COMED_P1-2_345-L1202__B-S-A	operation	1479.0	95.08	107.69	AC	186.44
689028	274702	KENDALL ;BU	345.0	CE	270810	LOCKPORT ; B	345.0	CE	1	COMED_P1-2_345-L1221__B-S	operation	1479.0	102.79	106.29	AC	52.18
689030	274702	KENDALL ;BU	345.0	CE	270810	LOCKPORT ; B	345.0	CE	1	Base Case	operation	1201.0	103.19	106.51	AC	40.01
688799	274750	CRETE EC ;BP	345.0	CE	255112	17STJOHN	345.0	NIPS	1	AEP_P1-2_#695A	operation	1399.0	105.94	108.22	AC	38.63
362630	274804	UNIV PK N;RP	345.0	CE	243229	05OLIVE	345.0	AEP	1	AEP_P1-2_#695A	operation	971.0	109.31	111.98	AC	29.47
689059	275179	DRESDEN ;1M	138.0	CE	271337	DRESDEN ; R	138.0	CE	1	COMED_P1-2_345-L10805_B-S	operation	442.0	102.55	105.96	AC	17.98
688729	930740	AB1-122 TAP	345.0	CE	270717	DRESDEN ; R	345.0	CE	1	COMED_P1-2_345-L1202__B-S-A	operation	1195.0	108.22	112.89	DC	55.81
688815	930750	AB1-122 TAP	345.0	CE	270716	DRESDEN ; B	345.0	CE	1	Base Case	operation	1201.0	92.06	104.57	DC	150.3
4232367	930750	AB1-122 TAP	345.0	CE	270716	DRESDEN ; B	345.0	CE	1	COMED_P1-2_345-L0304__R-S	operation	1479.0	89.6	102.23	AC	186.78

11.5 System Reinforcements

ID	Index	Facility	Upgrade Description	Cost	Cost Allocated to AE1-113	NUN
689257,4232771	21	**AB1-122 TAP 345.0 kV - DRESDEN ; R 345.0 kV Ckt 1**	The upgrade will be to reconductor the line. The estimate for this upgrade is $6.925 M (per AB1-122 Facilities Study) with a preliminary construction timeline of 30-36 months. PJM Network Upgrade N5756. Queue | MW contribution | Percentage of Cost | $ cost ($6.925 M) AB1-122 | 560.0 | 86.44% | 5.9860 AD1-039 | 51.5 | 7.94% | 0.5500 AE1-113 | 36.4 | 5.62% | 0.3891	$6.925 M	$389.1 K	N5756

© PJM Interconnection 2020. All rights reserved

<table>
<tr><th>ID</th><th>Index</th><th>Facility</th><th>Upgrade Description</th><th>Cost</th><th>Cost Allocated to AE1-113</th><th>NUN</th></tr>
<tr><td>688336,688334,688335,688333</td><td>9</td><td>E FRANKFO; B 345.0 kV - CRETE EC ;BP 345.0 kV Ckt 1</td><td>L6607 SSTE rating is 1483 MVA. The post contingency flow for this event exceeds the rating therefore an upgrade is required. The upgrade will be to reconductor the line. A preliminary estimate is $10.3 M with an estimated construction timeline of 30 months. Upon completion of the upgrades the rating swill be 1334/1726/1837/2084 MVA (SN/SLTE/SSTE/SLD).

Project Type : FAC

Cost : $10.3 Millions

Time Estimate : 30 months

The cost allocation table is as follows:
<table>
<tr><th>Queue</th><th>MW contribution</th><th>Percentage of Cost</th><th>$ cost ($ 38.672 M)</th></tr>
<tr><td>AE1-070</td><td>19</td><td>32.68%</td><td>$3,366,013</td></tr>
<tr><td>AE1-113</td><td>39.14</td><td>67.32%</td><td>$6,933,987</td></tr>
</table></td><td>$38,672,000</td><td>$6,933,987</td><td>N5917</td></tr>
<tr><td>688038, 688042, 688039, 688041</td><td>19, 14, 13, 20</td><td>WILTON ; B 345.0 kV - WILTON ;3M 345.0 kV Ckt 1 & WILTON ; R 345.0 kV - WILTON ;4M 345.0 kV Ckt 1 & WILTON ;4M 345.0 kV - WILTON ; 765.0 kV Ckt 1 & WILTON ;3M 345.0 kV - WILTON ; 765.0 kV Ckt 1</td><td>PJM Network Upgrade (n5145): Reconfigure Wilton 765kV bus thereby allowing for 765kV L11216 (currently on Bus 6) to be relocated to Bus 8. Along with this line relocation, installation of 2-765kV BT CBs (6-8 & 8-2).
Project Type : CON
Cost : $12,000,000
Time Estimate : 36-40 Months

The cost allocation table is as follows:
<table>
<tr><th>Queue</th><th>MW contribution</th><th>Percentage of Cost</th><th>$ cost ($ 12 M)</th></tr>
<tr><td>AD1-039</td><td>18.0</td><td>3.23%</td><td>$387,715</td></tr>
<tr><td>AD1-098</td><td>14.9</td><td>2.67%</td><td>$320,942</td></tr>
<tr><td>AD1-100</td><td>173.4</td><td>31.12%</td><td>$3,734,990</td></tr>
<tr><td>AD1-133</td><td>47.1</td><td>8.45%</td><td>$1,014,521</td></tr>
<tr><td>AD2-038</td><td>22.8</td><td>4.10%</td><td>$491,537</td></tr>
<tr><td>AD2-047</td><td>34.3</td><td>6.15%</td><td>$738,167</td></tr>
<tr><td>AD2-066</td><td>17.7</td><td>3.18%</td><td>$381,684</td></tr>
<tr><td>AD2-102</td><td>29.7</td><td>5.32%</td><td>$638,653</td></tr>
<tr><td>AD2-134</td><td>17.6</td><td>3.16%</td><td>$379,530</td></tr>
<tr><td>AD2-137</td><td>41.3</td><td>7.41%</td><td>$889,591</td></tr>
<tr><td>AD2-172</td><td>7.4</td><td>1.32%</td><td>$158,748</td></tr>
<tr><td>AD2-175</td><td>36.7</td><td>6.58%</td><td>$789,647</td></tr>
<tr><td>AD2-194</td><td>19.7</td><td>3.53%</td><td>$423,471</td></tr>
<tr><td>AD2-214</td><td>9.3</td><td>1.66%</td><td>$199,243</td></tr>
<tr><td>AE1-070</td><td>22.0</td><td>3.94%</td><td>$473,013</td></tr>
<tr><td>AE1-113</td><td>45.4</td><td>8.15%</td><td>$978,550</td></tr>
</table></td><td>$12,000,000</td><td>$978,550</td><td>N5145</td></tr>
</table>

© PJM Interconnection 2020. All rights reserved

ID	Index	Facility	Upgrade Description	Cost	Cost Allocated to AE1-113	NUN
361901	12	GREENACRE; T 345.0 kV - 05OLIVE 345.0 kV Ckt 1	ComEd SSTE rating is 1134 MVA. No upgrade is required. AEP: A Sag Study will be required on the ACSR/PE 1414 62/19 - Conductor Section 1 40.64 miles of conductor to mitigate the overload. The new ratings after sag study will be: S/N: 971 MVA, S/E: 1419 MVA, Depending on the sag study results, the cost for this upgrade is expected to be between $162,560 (no remediation required, just sag study) and $81.28 million (complete line Reconductor/rebuild). Time Estimate: a) Sag Study: 6-12 months b) Rebuild: The standard time required for construction differs from state to state. An approximate construction time would be 24 to 36 months after signing an interconnection agreement. Project Type : FAC Cost : $162,560 Time Estimate : 24 -36 months Queue Project AE1-113 presently does not receive cost allocation for this upgrade. Note 1: as changes to the interconnection process occur, such as prior queued projects withdrawing from the queue, reducing in size, etc., Queue Project AE1-113 could receive cost allocation. Note 2: Although Queue Project AE1-113 may not have cost responsibility for this upgrade, Queue Project AE1-113 may need this upgrade in-service to be deliverable to the PJM system. If Queue Project AE1-113 comes into service prior to completion of the upgrade, Queue Project AE1-113 will need an interim study.	$162,560	$0	N5768

© PJM Interconnection 2020. All rights reserved

<table>
<tr><th>ID</th><th>Index</th><th>Facility</th><th>Upgrade Description</th><th>Cost</th><th>Cost Allocated to AE1-113</th><th>NUN</th></tr>
<tr><td>51315624,688256,688255,688257,687710</td><td>1</td><td>ELWOOD ; R 345.0 kV - GOODINGS ;2R 345.0 kV Ckt 1</td><td>
The upgrade will be to reconducor 18.1 miles of the line with 2156 kcmil ACSR (84/19) Str Bluebird conductor and replace some towers. Estimate for this is $39.352 M with a 30 month estimated construction timeline. Upon completion of the work the ratings will be 1334/1726/1837/2084 MVA (SN/SLTE/SSTE/SLD).

Project Type : FAC

Cost : $39.352 Millions

Time Estimate : 36 months

The cost allocation table is as follows:
<table>
<tr><th>Queue</th><th>MW contribution</th><th>Percentage of Cost</th><th>$ cost ($ 39.352 M)</th></tr>
<tr><td>AC1-204</td><td>76.7</td><td>33.36%</td><td>$13,127,000</td></tr>
<tr><td>AD1-039</td><td>16.2</td><td>7.05%</td><td>$2,772,600</td></tr>
<tr><td>AD1-133</td><td>16.9</td><td>7.35%</td><td>$2,892,400</td></tr>
<tr><td>AD2-066</td><td>5.21</td><td>2.27%</td><td>$891,700</td></tr>
<tr><td>AD2-194</td><td>39.28</td><td>17.08%</td><td>$6,722,700</td></tr>
<tr><td>AE1-070</td><td>44.16</td><td>19.21%</td><td>$7,557,900</td></tr>
<tr><td>AE1-113</td><td>31.48</td><td>13.69%</td><td>$5,387,700</td></tr>
</table>
</td><td>$39,352,000</td><td>$5,387,700</td><td>N5916</td></tr>
</table>

© PJM Interconnection 2020. All rights reserved

ID	Index	Facility	Upgrade Description	Cost	Cost Allocated to AE1-113	NUN
361774,361770,361771,361772,361773	17	UNIV PK N;RP 345.0 kV - 05OLIVE 345.0 kV Ckt 1	ComEd SSTE rating is 1134 MVA. No upgrade is required. AEP: A Sag Study will be required on the 40.64 miles of ACSR/PE 1414 62/19 conductor to mitigate the overload. The new ratings after sag study will be: S/N: 971 MVA, S/E: 1419 MVA, Depending on the sag study results, the cost for this upgrade is expected to be between $162,560 (no remediation required, just sag study) and $81.28 million (complete line Reconductor/rebuild). Time Estimate: a) Sag Study: 6-12 months b) Rebuild: The standard time required for construction differs from state to state. An approximate construction time would be 24 to 36 months after signing an interconnection agreement. Project Type : FAC Cost : $162,560 Time Estimate : 24 -36 months Queue Project AE1-113 presently does not receive cost allocation for this upgrade. Note 1: as changes to the interconnection process occur, such as prior queued projects withdrawing from the queue, reducing in size, etc., Queue Project AE1-113 could receive cost allocation. Note 2: Although Queue Project AE1-113 may not have cost responsibility for this upgrade, Queue Project AE1-113 may need this upgrade in-service to be deliverable to the PJM system. If Queue Project AE1-113 comes into service prior to completion of the upgrade, Queue Project AE1-113 will need an interim study	$162,000	$0	N4057
687715,688234,688233,688232,688231,687716	11	GOODINGS ;4B 345.0 kV - GOODINGS ;3B 345.0 kV Ckt 1	ComEd 345kV BT 3-4 at Goodings Grove SSTE rating is 2083 MVA. No upgrade is required.	$0	$0	N/A

© PJM Interconnection 2020. All rights reserved

<table>
<tr><th>ID</th><th>Index</th><th>Facility</th><th>Upgrade Description</th><th>Cost</th><th>Cost Allocated to AE1-113</th><th>NUN</th></tr>
<tr><td>688295,688297,687738,687737,688296</td><td>10</td><td>ELWOOD ; B 345.0 kV - GOODINGS ;4B 345.0 kV Ckt 1</td><td>The upgrade will be to reconductor 18.1 miles of the line with 2156 kcmil ACSR (84/19) Str Bluebird conductor and replace some towers. Estimate for this is $39.352 million with a 36 month estimated construction timeline. Upon completion of the work the ratings will be 1334/1726/1837/2084 MVA (SN/SLTE/SSTE/SLD).

Project Type : FAC

Cost : $39.352 Millions

Time Estimate : 36 months

The cost allocation table is as follows:
<table>
<tr><th>Queue</th><th>MW contribution</th><th>Percentage of Cost</th><th>$ cost ($ 39.352 M)</th></tr>
<tr><td>AC1-204</td><td>59.4</td><td>28.56%</td><td>$11,239,600</td></tr>
<tr><td>AD1-039</td><td>15.9</td><td>7.65%</td><td>$3,008,600</td></tr>
<tr><td>AD1-133</td><td>17.3</td><td>8.32%</td><td>$3,273,500</td></tr>
<tr><td>AD2-066</td><td>5.13</td><td>2.47%</td><td>$970,700</td></tr>
<tr><td>AD2-194</td><td>39.1</td><td>18.80%</td><td>$7,398,500</td></tr>
<tr><td>AE1-070</td><td>44.16</td><td>21.23%</td><td>$8,355,900</td></tr>
<tr><td>AE1-113</td><td>26.98</td><td>12.97%</td><td>$5,105,100</td></tr>
</table></td><td>$39,352,000</td><td>$5,105,100</td><td>N5915</td></tr>
</table>

© PJM Interconnection 2020. All rights reserved

<table>
<tr><th>ID</th><th>Index</th><th>Facility</th><th>Upgrade Description</th><th>Cost</th><th>Cost Allocated to AE1-113</th><th>NUN</th></tr>
<tr><td>688076, 688081</td><td>7, 18</td><td>DRESDEN ; B 345.0 kV - DRESDEN ;1M 138.0 kV Ckt 1 & DRESDEN ;1M 138.0 kV - DRESDEN ; R 138.0 kV Ckt 1</td><td>
ComEd Tr. 81 at Dresden Station SSTE rating is 520 MVA. The upgrade will be installation of a second auto transformer on 345kV Blue Bus. This second transformer will require expansion of the 138kV at Dresden. Estimated construction timeline of 5-6 years subject to outage coordination at Dresden Station. Upon completion of the upgrade the ratings will remain as shown however the addition of a second auto on the Blue bus will distribute the post contingency flows.

Cost : $65 Millions

Time Estimate : 60-72 months

Queue Project AE1-113 presently does not receive cost allocation for this upgrade.

The potential cost allocation table is as follows:
<table>
<tr><th>Queue</th><th>MW contribution</th><th>Percentage of Cost</th><th>$ cost ($ 65 M)</th></tr>
<tr><td>AD1-039</td><td>12.601</td><td>25.9%</td><td>16.835 M</td></tr>
<tr><td>AE1-113</td><td>36.1</td><td>74.1%</td><td>48.165 M</td></tr>
</table>

Note 1: as changes to the interconnection process occur, such as prior queued projects withdrawing from the queue, reducing in size, etc., Queue Project AE1-113 could receive cost allocation.

Note 2: Although Queue Project AE1-113 may not have cost responsibility for this upgrade, Queue Project AE1-113 may need this upgrade in-service to be deliverable to the PJM system. If Queue Project AE1-113 comes into service prior to completion of the upgrade, Queue Project AE1-113 will need an interim study.
</td><td>$65,000,000</td><td>$0</td><td>N/A</td></tr>
</table>

© PJM Interconnection 2020. All rights reserved

<table>
<tr><th>ID</th><th>Index</th><th>Facility</th><th>Upgrade Description</th><th>Cost</th><th>Cost Allocated to AE1-113</th><th>NUN</th></tr>
<tr><td>687747,689493,688314,688315</td><td>15</td><td>KENDALL ;BU 345.0 kV - LOCKPORT ; B 345.0 kV Ckt 1</td><td>Re-conductor 16.1 miles with 2156 kcmil ACSR (84/19) Str Bluebird. Estimate is $38.672 M with a construction time of 30 months. New ratings to be 1334/1726/1837/2084 MVA SN/SLTE/SSTE/SLD. PJM Network Upgrade N5144.

Project Type : FAC

Cost : $38.672 Millions

Time Estimate : 36 months

The cost allocation table is as follows:
<table>
<tr><th>Queue</th><th>MW contribution</th><th>Percentage of Cost</th><th>$ cost ($ 38.672 M)</th></tr>
<tr><td>AB1-122</td><td>56.6</td><td>24.94%</td><td>$9,645,420</td></tr>
<tr><td>AC1-204</td><td>95.9</td><td>42.26%</td><td>$16,342,682</td></tr>
<tr><td>AD1-039</td><td>13.5</td><td>5.95%</td><td>$2,300,586</td></tr>
<tr><td>AD2-066</td><td>15.02</td><td>6.62%</td><td>$2,559,615</td></tr>
<tr><td>AD2-194</td><td>22.3</td><td>9.83%</td><td>$3,800,227</td></tr>
<tr><td>AE1-113</td><td>23.61</td><td>10.40%</td><td>$4,023,469</td></tr>
</table></td><td>$38,672,000</td><td>$4,023,469</td><td>N5144</td></tr>
<tr><td>689434</td><td>8</td><td>DRESDEN ; B 345.0 kV - KENDALL ;BU 345.0 kV Ckt 1</td><td>ComEd 345kV L93505 SLD & ALDR ratings are 1367 MVA & 1572 MVA. No upgrade is required.</td><td>$0</td><td>$0</td><td>N/A</td></tr>
</table>

© PJM Interconnection 2020. All rights reserved

<table>
<tr>
<td>688066,688068,688069</td>
<td>16</td>
<td>CRETE EC ;BP 345.0 kV - 17STJOHN 345.0 kV Ckt 1</td>
<td>

ComEd Upgrade: **PJM Project n5253**

Reconductor the Crete to St John 345kV line

New Expected Ratings: 1837/2084/2360 MVA (SSTE/SLD/ALDR)
Cost Estimate: $11.2M

PJM Network Upgrade Number: N5253

Project Type : FAC

Cost : $11.2 Millions

Time Estimate : 30 months

The cost allocation table is as follows

<table>
<tr><th>Queue</th><th>MW contribution</th><th>Percentage of Cost</th><th>$ cost ($11.2 M)</th></tr>
<tr><td>AD1-100</td><td>71.4</td><td>22.57%</td><td>$2,528,200</td></tr>
<tr><td>AD1-133</td><td>35.1</td><td>11.11%</td><td>$1,243,900</td></tr>
<tr><td>AD2-038</td><td>18.3</td><td>5.80%</td><td>$649,400</td></tr>
<tr><td>AD2-047</td><td>24.2</td><td>7.64%</td><td>$855,800</td></tr>
<tr><td>AD2-066</td><td>14.5</td><td>4.58%</td><td>$512,700</td></tr>
<tr><td>AD2-102</td><td>24.7</td><td>7.80%</td><td>$873,500</td></tr>
<tr><td>AD2-134</td><td>14.6</td><td>4.61%</td><td>$515,900</td></tr>
<tr><td>AD2-172</td><td>6.1</td><td>1.93%</td><td>$216,300</td></tr>
<tr><td>AD2-175</td><td>25.2</td><td>7.98%</td><td>$893,700</td></tr>
<tr><td>AD2-194</td><td>16.8</td><td>5.30%</td><td>$593,100</td></tr>
<tr><td>AD2-214</td><td>7.6</td><td>2.41%</td><td>$269,800</td></tr>
<tr><td>AE1-070</td><td>18.7</td><td>5.91%</td><td>$662,100</td></tr>
<tr><td>AE1-113</td><td>39.1</td><td>12.37%</td><td>$1,385,500</td></tr>
</table>

MISO Upgrade:

MISO-End upgrade: Upgrade St John substation conductor drop and switch. $1M cost estimate. New MISO end SE rating will be 1900 MVA.

Queue Project AE1-113 presently does not receive cost allocation for this upgrade.

</td>
<td>$11,200,000</td>
<td>$1,385,500</td>
<td>N5253</td>
</tr>
</table>

© PJM Interconnection 2020. All rights reserved

ID	Index	Facility	Upgrade Description	Cost	Cost Allocated to AE1-113	NUN
			Note 1: as changes to the interconnection process occur, such as prior queued projects withdrawing from the queue, reducing in size, etc, Queue Project AE1-113 could receive cost allocation. Note 2: Although Queue Project AE1-113 may not have cost responsibility for this upgrade, Queue Project AE1-113 may need this upgrade in-service to be deliverable to the PJM system. If Queue Project AE1-113 comes into service prior to completion of the upgrade, Queue Project AE1-113 will need an interim study.			
689445,4232873	5	POWERTON ; R 345.0 kV - 7TAZEWELL 345.0 kV Ckt 1	**ComEd Upgrade** **ComEd 345kV L0304 SLD & ALDR ratings are 1598 MVA & 1838 MVA respectively. No upgrade is required.** **AMIL Upgrade** **AE1-113 is the driver for this upgrade** **Ameren limit is 1512 MVA due to 2 conductor 12777 ACAR. Would need to reconductor or rebuild 0.64 miles with 2x954 Kcmil ACSR 45/7 RAIL and replace bus conductor to achieve 3500 A.** **Project Type : FAC** **Cost : $750,000** **Time Estimate : 24 months** **New Rating:** **Rate A: Unknown** **Rate B: 1793**	$750,000	$750,000	N/A

© PJM Interconnection 2020. All rights reserved

<table>
<tr><th>ID</th><th>Index</th><th>Facility</th><th>Upgrade Description</th><th>Cost</th><th>Cost Allocated to AE1-113</th><th>NUN</th></tr>
<tr><td></td><td></td><td>7Casey 345.0 kV – 05Sullivan 345.0 kV Ckt 1</td><td>The Ameren end SE rating is 1466 MVA.
The AEP end SE rating is 1685 MVA.

The Ameren end planned upgrade for a prior queue cycle is: Install splice and dead-end shunts on the Ameren-owned portion of the Casey West – Sullivan 345 kV line, which will increase the Ameren end rating to 1692 MVA SE. Cost estimate is $506K.

This Ameren upgrade is not sufficient for AE1-113 as the flow exceeds both the Ameren and AEP ratings.

AEP upgrade:

AEP can eliminate the Eugene stuck breaker contingency, which is causing the overload, by requiring a new string, expanding the 345 kV buses, add two (2) additional 345 kV circuit breakers, and repositioning the Bunsonville 345 kV line between the two new breakers on the new string. Estimated cost is $5M. PJM Network Upgrade N5808.
<table>
<tr><th>Queue</th><th>MW Contribution</th><th>Percentage of cost</th><th>Cost ($5 M)</th></tr>
<tr><td>AD1-100</td><td>49.3</td><td>31.34%</td><td>$1.567</td></tr>
<tr><td>AD1-133</td><td>23.9</td><td>15.19%</td><td>$0.760</td></tr>
<tr><td>AD2-100</td><td>37.7</td><td>23.97%</td><td>$1.198</td></tr>
<tr><td>AD2-159</td><td>26.2</td><td>16.66%</td><td>$0.833</td></tr>
<tr><td>AE1-113</td><td>20.2</td><td>12.84%</td><td>$0.642</td></tr>
</table></td><td>$5 M</td><td>$642 K</td><td>N5808</td></tr>
</table>

© PJM Interconnection 2020. All rights reserved

		17STILLWELL 345.0 kV - 05DUMONT 345.0 kV Ckt 1	AEP End: Sag mitigation work will include the replacement of tower 20 with a custom steel pole, replacement of tower 24 with a custom H-frame and the removal of swing angle brackets on 2 structures. Cost estimate is $1.613M. New SE rating will be 1718 MVA. PJM Network Upgrade N4058. Upgrade Dumont 2500A wavetrap at a cost of $200K. PJM Network Upgrade N4790. New AEP-end ratings to be 1409/1790 MVA (SN/SE). An Engineering study will need to be conducted to determine if the Dumont CT Thermal Limit settings can be adjusted to mitigate the overload. Estimated Cost: $25,000. New relay package will be required if the settings cannot be adjusted, Estimated Cost: $600,000. New AEP ratings: 1409/1868 MVA SN/SE. PJM Network Upgrade N5769.1. Queue Project AE1-113 presently does not receive cost allocation for these upgrades as these constraints are driven by a prior queue cycle. Note 1: as changes to the interconnection process occur, such as prior queued projects withdrawing from the queue, reducing in size, etc, Queue Project AE1-113 could receive cost allocation. Note 2: Although Queue Project AE1-113 may not have cost responsibility for these upgrades, Queue Project AE1-113 may need these upgrades in-service to be deliverable to the PJM system. If Queue Project AE1-113 comes into service prior to completion of these upgrades, Queue Project AE1-113 will need an interim study. MISO-end: MISO end SE rating is 1779 MVA. Upgrade Stillwell substation terminal equipment (upgrade substation conductor to bundled 2-1590 AL and replace wavetrap) at a cost of $1.5M. New expected MISO end SE rating will be 1832 MVA. Queue Project AE1-113 presently does not receive cost allocation for these upgrades as these constraints are driven by a prior queue cycle. Note 1: as changes to the interconnection process occur, such as prior queued projects withdrawing from the queue, reducing in size, etc, Queue Project AE1-113 could receive cost allocation. Note 2: Although Queue Project AE1-113 may not have cost responsibility for these upgrades, Queue Project AE1-113 may need these upgrades in-service to be deliverable to the PJM system. If Queue Project AE1-113 comes into service prior to	**$1.613 M + $200 K + $600 K + $1.5 M + $8 M**	**$0 + $0 + $0 + $0 + $5.4 M**	**N4058 N4790 N5769.1**

© PJM Interconnection 2020. All rights reserved

<table>
<tr><th>ID</th><th>Index</th><th>Facility</th><th>Upgrade Description</th><th>Cost</th><th>Cost Allocated to AE1-113</th><th>NUN</th></tr>
<tr><td></td><td></td><td></td><td>completion of these upgrades, Queue Project AE1-113 will need an interim study.

Additional MISO-end upgrade: Rebuild NIPSCO portion of line (2.87 miles) to 2- 954 ACSR transmission conductor at a cost of $6.5M and upgrade substation conductor to 954 ACSR at a cost of $1.5 M (total $8M). New expected MISO end ratings will be 1582/1898 MVA SN/SE.
<table>
<tr><th>Queue</th><th>MW contributio n</th><th>Percentage of cost</th><th>$ cost ($8 M)</th></tr>
<tr><td>AE1-070</td><td>20.1</td><td>32.50%</td><td>$2.600</td></tr>
<tr><td>AE1-113</td><td>41.8</td><td>67.50%</td><td>$5.400</td></tr>
</table></td><td></td><td></td><td></td></tr>
<tr><td></td><td></td><td></td><td>Total Costs</td><td></td><td>$30,995,406</td><td></td></tr>
</table>

© PJM Interconnection 2020. All rights reserved

11.6 Flow Gate Details

The following indices contain additional information about each flowgate presented in the body of the report. For each appendix, a description of the flowgate and its contingency was included for convenience. However, the intent of the appendix section is to provide more information on which projects/generators have contributions to the flowgate in question. Although this information is not used "as is" for cost allocation purposes, it can be used to gage other generators impact. It should be noted the generator contributions presented in the appendices sections are full contributions, whereas in the body of the report, those contributions take into consideration the commercial probability of each project.

11.6.1 Index 1

ID	FROM BUS#	FROM BUS	FROM BUS AREA	TO BUS#	TO BUS	TO BUS AREA	CKT ID	CONT NAME	Type	Rating MVA	PRE PROJECT LOADING %	POST PROJECT LOADING %	AC|DC	MW IMPACT
688255	270737	ELWOOD ; R	CE	270769	GOODINGS ;2R	CE	1	COMED_P4_116-45-L11613_	breaker	1479.0	118.39	120.21	AC	31.48

Bus #	Bus	MW Impact
274729	ELWOOD EC;1P	6.9848
274731	ELWOOD EC;2P	6.9848
274733	ELWOOD EC;3P	6.9848
274734	ELWOOD EC;8P	6.9439
274735	ELWOOD EC;4P	6.9848
274736	ELWOOD EC;9P	6.9439
290021	O50 E	14.2732
927091	AC1-204 1	158.5965
927101	AC1-204 2	187.6832
930741	AB1-122 1O1	70.1601
930751	AB1-122 2O1	80.5655
934101	AD1-039 1	6.8757
934111	AD1-039 2	7.8954
935001	AD1-133 C O1	15.0736
935002	AD1-133 E O1	10.0490
936511	AD2-066 C O1	4.8973
936512	AD2-066 E O1	3.2648
937401	AD2-194 1	17.0549
937411	AD2-194 2	20.1828
938511	AE1-070 1	20.0395
938521	AE1-070 2	21.6965
938851	AE1-113 C O1	5.8877
938852	AE1-113 E O1	20.8746
BLUEG	BLUEG	2.0842
CBM-W2	CBM-W2	22.7311
CBM-W1	CBM-W1	6.2879
WEC	WEC	1.7563
O-066	O-066	4.5898
CARR	CARR	0.2598
CBM-S1	CBM-S1	0.7245

© PJM Interconnection 2020. All rights reserved

Bus #	Bus	MW Impact
G-007	G-007	0.7093
HAMLET	HAMLET	0.1696
MEC	MEC	13.4673
CANNELTON	CANNELTON	0.0210
GIBSON	GIBSON	0.0064
Z1-043	Z1-043	12.0250
TRIMBLE	TRIMBLE	0.2482
RENSSELAER	RENSSELAER	0.2054
CATAWBA	CATAWBA	0.0861

11.6.2 Index 2

ID	FROM BUS#	FROM BUS	FROM BUS AREA	TO BUS#	TO BUS	TO BUS AREA	CKT ID	CONT NAME	Type	Rating MVA	PRE PROJECT LOADING %	POST PROJECT LOADING %	AC|DC	MW IMPACT
688350	255104	17GREEN_ACRE	NIPS	270771	GREENACRE; T	CE	1	AEP_P4_#2978_05DUMONT 765_B	breaker	1091.0	97.67	98.71	AC	24.32

Bus #	Bus	MW Impact
270859	PWR VTR EC;R	6.8433
274722	S-055 E	6.3870
274751	CRETE EC ;1U	1.7423
274752	CRETE EC ;2U	1.7423
274753	CRETE EC ;3U	1.7423
274754	CRETE EC ;4U	1.7423
274832	**U4-027 (Withdrawn : 05/29/2019)**	**6.0401**
274859	EASYR;U1 E	6.1983
274860	EASYR;U2 E	6.1983
274888	PILOT HIL;1E	10.5279
274890	CAYUG;1U E	7.5725
274891	CAYUG;2U E	7.5725
275149	KEMPTON ;1E	10.5279
290021	O50 E	11.0255
290051	GSG-6; E	5.8965
290108	LEEDK;1U E	13.7071
293061	N-015 E	8.6935
293516	O-009 E1	5.0899
293517	O-009 E2	2.5853
293518	O-009 E3	2.8471
293644	O22 E1	6.1495
293645	O22 E2	11.9372
293715	O-029 E	5.4976
293716	O-029 E	3.0142
293717	O-029 E	2.7704
293771	O-035 E	3.5652
294392	P-010 E	11.0407
294401	BSHIL;1U E	4.7722
294410	BSHIL;2U E	4.7722

© PJM Interconnection 2020. All rights reserved

Bus #	Bus	MW Impact
294763	P-046 E	5.2918
295109	WESTBROOK E	3.1569
295111	SUBLETTE E	1.4597
910542	X3-005 E	0.4404
914641	Y2-103	25.5479
915011	Y3-013 1	2.1290
915021	Y3-013 2	2.1290
915031	Y3-013 3	2.1290
916211	Z1-072 E	2.6980
916221	Z1-073 E	3.0425
916502	Z1-106 E1	0.8408
916504	Z1-106 E2	0.8408
916512	Z1-107 E	1.7128
916522	Z1-108 E	1.6574
918052	AA1-018 E	9.0171
919221	AA1-146	9.9047
919581	AA2-030	9.9047
919621	AA2-039 C	1.1632
919622	AA2-039 E	7.7847
920272	AA2-123 E	1.6270
924471	AB2-096	23.9517
925161	AB2-173	1.7664
925302	AB2-191 E	0.7808
925581	AC1-033 C	0.7816
925582	AC1-033 E	5.2323
926311	AC1-109 1	1.0772
926321	AC1-109 2	1.0772
926331	AC1-110 1	1.0757
926341	AC1-110 2	1.0757
926351	AC1-111 1	0.4310
926361	AC1-111 2	0.4310
926371	AC1-111 3	0.4310
926381	AC1-111 4	0.4310
926391	AC1-111 5	0.4310
926401	AC1-111 6	0.4310
926431	AC1-114	1.3445
926821	AC1-168 C O1	0.6424
926822	AC1-168 E O1	4.3107
927091	AC1-204 1	41.4122
927101	AC1-204 2	41.3790
927201	AC1-214 C O1	1.1442
927202	AC1-214 E O1	3.6374
927451	AC1-142A 1	2.4037
927461	AC1-142A 2	2.4045
927511	AC1-113 1	0.6723
927521	AC1-113 2	0.6723
930481	AB1-089	37.1522
930501	AB1-091 O1	41.7337
930741	AB1-122 1O1	40.4050
930751	AB1-122 2O1	42.2475
932881	AC2-115 1	1.3445
932891	AC2-115 2	1.3445

© PJM Interconnection 2020. All rights reserved

Bus #	Bus	MW Impact
932921	AC2-116	0.4706
933341	AC2-147 C	0.4917
933342	AC2-147 E	0.8022
933411	AC2-154 C	1.4288
933412	AC2-154 E	2.3312
933431	AC2-156 C O1	0.5396
933432	AC2-156 E O1	0.8804
933911	AD1-013 C	1.0380
933912	AD1-013 E	1.6582
933931	AD1-016 C	0.5255
933932	AD1-016 E	0.8574
934051	AD1-031 C O1	1.5868
934052	AD1-031 E O1	2.5889
934101	AD1-039 1	3.9597
934111	AD1-039 2	4.1403
934431	AD1-067 C	0.0740
934432	AD1-067 E	0.3113
934651	AD1-096 C	0.5032
934652	AD1-096 E	0.8210
934701	AD1-098 C O1	3.8798
934702	AD1-098 E O1	2.8327
934721	AD1-100 C	10.9892
934722	AD1-100 E	51.2831
934871	AD1-116 C	0.5251
934872	AD1-116 E	0.8568
934971	AD1-129 C	0.5111
934972	AD1-129 E	0.3407
935001	AD1-133 C O1	11.6555
935002	AD1-133 E O1	7.7704
936291	AD2-038 C O1	1.3089
936292	AD2-038 E O1	8.7597
936371	AD2-047 C O1	2.5568
936372	AD2-047 E O1	12.4831
936461	AD2-060	1.5040
936511	AD2-066 C O1	4.7227
936512	AD2-066 E O1	3.1485
936791	AD2-102 C	7.9907
936792	AD2-102 E	5.3271
937001	AD2-134 C	1.5414
937002	AD2-134 E	6.3677
937311	AD2-172 C	1.3891
937312	AD2-172 E	1.9183
937321	AD2-175 C	9.3321
937322	AD2-175 E	6.2214
937401	AD2-194 1	4.4533
937411	AD2-194 2	4.4498
937531	AD2-214 C	2.4800
937532	AD2-214 E	1.6533
938511	AE1-070 1	5.2327
938521	AE1-070 2	4.7835
938851	AE1-113 C O1	4.5480
938852	AE1-113 E O1	16.1248

© PJM Interconnection 2020. All rights reserved

Bus #	Bus	MW Impact
938861	AE1-114 C O1	2.2169
938862	AE1-114 E O1	7.5636
939051	AE1-134 1	0.7697
939061	AE1-134 2	0.7697
939321	AE1-163 C O1	3.2891
939322	AE1-163 E O1	20.2045
939351	AE1-166 C O1	5.8059
939352	AE1-166 E O1	5.3593
939401	AE1-172 C O1	2.9557
939402	AE1-172 E O1	13.8381
939631	AE1-193 C O1	10.8791
939632	AE1-193 E O1	72.8060
939641	AE1-194 C	10.8791
939642	AE1-194 E	72.8060
939651	AE1-195 C	10.8791
939652	AE1-195 E	72.8060
939681	AE1-198 C O1	32.3024
939682	AE1-198 E O1	27.4487
939731	**AE1-204 E (Withdrawn : 11/18/2019)**	**0.3134**
939741	AE1-205 C O1	4.8938
939742	AE1-205 E O1	6.7580
940101	AE1-252 C O1	5.9272
940102	AE1-252 E O1	3.9515
951721	J643	15.4805
952581	J740 C	3.4005
952582	J740 E	18.3975
953871	J847	8.3709
990901	L-005 E	2.9504
CIN	CIN	0.0980
BLUEG	BLUEG	2.9008
CBM-W2	CBM-W2	38.4118
CBM-W1	CBM-W1	19.9987
WEC	WEC	5.3187
O-066	O-066	8.8234
CARR	CARR	0.4994
CHEOAH	CHEOAH	0.0025
CBM-S1	CBM-S1	1.3170
SANTEETLA	SANTEETLA	0.0021
G-007	G-007	1.3645
HAMLET	HAMLET	0.3278
MEC	MEC	25.0081
CANNELTON	CANNELTON	0.0067
Z1-043	Z1-043	18.7954
TRIMBLE	TRIMBLE	0.3484
CHOCTAW /* 35% REVERSE 4566958 4511400	CHOCTAW /* 35% REVERSE 4566958 4511400	0.0000
RENSSELAER	RENSSELAER	0.3948
CATAWBA	CATAWBA	0.1673

© PJM Interconnection 2020. All rights reserved

11.6.3 Index 3

ID	FROM BUS#	FROM BUS	FROM BUS AREA	TO BUS#	TO BUS	TO BUS AREA	CKT ID	CONT NAME	Type	Rating MVA	PRE PROJECT LOADING %	POST PROJECT LOADING %	AC|DC	MW IMPACT
688191	255112	17STJOHN	NIPS	270886	ST JOHN ; T	CE	1	COMED_P4_023-65-BT2-3__	breaker	1091.0	96.11	98.0	AC	27.44

Bus #	Bus	MW Impact
270859	PWR VTR EC;R	7.6738
274654	BRAIDWOOD;1U	17.1861
274655	BRAIDWOOD;2U	16.4525
274661	LASCO STA;2U	15.8762
274687	WILL CNTY;4U	7.2421
274704	KENDALL ;1C	2.5366
274705	KENDALL ;1S	1.6915
274706	KENDALL ;2C	2.5366
274707	KENDALL ;2S	1.6915
274722	S-055 E	7.1749
274751	CRETE EC ;1U	3.0350
274752	CRETE EC ;2U	3.0350
274753	CRETE EC ;3U	3.0350
274754	CRETE EC ;4U	3.0350
274859	EASYR;U1 E	6.9368
274860	EASYR;U2 E	6.9368
274861	TOP CROP ;1U	0.2940
274862	TOP CROP ;2U	0.5707
274888	PILOT HIL;1E	10.8778
274890	CAYUG;1U E	5.0155
274891	CAYUG;2U E	5.0155
275149	KEMPTON ;1E	10.8778
290021	O50 E	12.4413
290051	GSG-6; E	6.6039
290108	LEEDK;1U E	15.3595
293061	N-015 E	9.8634
293516	O-009 E1	5.6840
293517	O-009 E2	2.8870
293518	O-009 E3	3.1794
293644	O22 E1	8.4954
293645	O22 E2	16.4910
293715	O-029 E	6.1440
293716	O-029 E	3.3686
293717	O-029 E	3.0961
294392	P-010 E	12.5265
294763	P-046 E	5.9269
295109	WESTBROOK E	3.5356
295111	SUBLETTE E	1.6326
914641	Y2-103	28.6997
915011	Y3-013 1	2.3916
915021	Y3-013 2	2.3916

© PJM Interconnection 2020. All rights reserved

Bus #	Bus	MW Impact
915031	Y3-013 3	2.3916
916221	Z1-073 E	3.4075
916502	Z1-106 E1	0.9435
916504	Z1-106 E2	0.9435
916512	Z1-107 E	1.8504
916522	Z1-108 E	1.8606
918052	AA1-018 E	9.8834
919221	AA1-146	11.0750
919581	AA2-030	11.0750
920272	AA2-123 E	1.8250
924471	AB2-096	26.8583
925161	AB2-173	1.9752
925302	AB2-191 E	0.8745
926311	AC1-109 1	1.2077
926321	AC1-109 2	1.2077
926331	AC1-110 1	1.2077
926341	AC1-110 2	1.2077
926351	AC1-111 1	0.4828
926361	AC1-111 2	0.4828
926371	AC1-111 3	0.4828
926381	AC1-111 4	0.4828
926391	AC1-111 5	0.4828
926401	AC1-111 6	0.4828
926431	AC1-114	1.5067
926821	AC1-168 C O1	0.7184
926822	AC1-168 E O1	4.8210
927091	AC1-204 1	46.8709
927101	AC1-204 2	46.8092
927451	AC1-142A 1	2.7176
927461	AC1-142A 2	2.7192
927511	AC1-113 1	0.7534
927521	AC1-113 2	0.7534
930481	AB1-089	41.6496
930501	AB1-091 O1	42.9726
930741	AB1-122 1O1	44.9894
930751	AB1-122 2O1	47.8340
932881	AC2-115 1	1.5067
932891	AC2-115 2	1.5067
932921	AC2-116	0.5273
933341	AC2-147 C	0.5502
933342	AC2-147 E	0.8977
933411	AC2-154 C	1.4763
933412	AC2-154 E	2.4087
933431	AC2-156 C O1	0.6048
933432	AC2-156 E O1	0.9868
933911	AD1-013 C	1.1627
933912	AD1-013 E	1.8572
933931	AD1-016 C	0.5895
933932	AD1-016 E	0.9618
934101	AD1-039 1	4.4090
934111	AD1-039 2	4.6877
934431	AD1-067 C	0.0829

© PJM Interconnection 2020. All rights reserved

Bus #	Bus	MW Impact
934432	AD1-067 E	0.3487
934651	AD1-096 C	0.5635
934652	AD1-096 E	0.9194
934701	AD1-098 C O1	4.3451
934702	AD1-098 E O1	3.1723
934721	AD1-100 C	12.1189
934722	AD1-100 E	56.5547
934871	AD1-116 C	0.5756
934872	AD1-116 E	0.9391
934971	AD1-129 C	0.5730
934972	AD1-129 E	0.3820
935001	AD1-133 C O1	12.8704
935002	AD1-133 E O1	8.5802
936291	AD2-038 C O1	1.4530
936292	AD2-038 E O1	9.7237
936371	AD2-047 C O1	2.6417
936372	AD2-047 E O1	12.8980
936461	AD2-060	1.5540
936511	AD2-066 C O1	5.2587
936512	AD2-066 E O1	3.5058
936791	AD2-102 C	8.9536
936792	AD2-102 E	5.9690
937001	AD2-134 C	1.7264
937002	AD2-134 E	7.1316
937311	AD2-172 C	1.5558
937312	AD2-172 E	2.1485
937321	AD2-175 C	9.6102
937322	AD2-175 E	6.4068
937401	AD2-194 1	5.0403
937411	AD2-194 2	5.0337
938511	AE1-070 1	5.9224
938521	AE1-070 2	5.4112
938851	AE1-113 C O1	5.1320
938852	AE1-113 E O1	18.1954
938861	AE1-114 C O1	2.4814
938862	AE1-114 E O1	8.4658
939051	AE1-134 1	0.8606
939061	AE1-134 2	0.8606
939321	AE1-163 C O1	3.6510
939322	AE1-163 E O1	22.4278
939351	AE1-166 C O1	6.4563
939352	AE1-166 E O1	5.9597
939401	AE1-172 C O1	3.2292
939402	AE1-172 E O1	15.1187
939631	AE1-193 C O1	18.9508
939632	AE1-193 E O1	126.8243
939641	AE1-194 C	18.9508
939642	AE1-194 E	126.8243
939651	AE1-195 C	18.9508
939652	AE1-195 E	126.8243
939681	AE1-198 C O1	56.2692
939682	AE1-198 E O1	47.8142

© PJM Interconnection 2020. All rights reserved

Bus #	Bus	MW Impact
939731	AE1-204 E (Withdrawn : 11/18/2019)	0.3521
940101	AE1-252 C O1	6.4757
940102	AE1-252 E O1	4.3172
CHILHOWEE	CHILHOWEE	0.0291
BLUEG	BLUEG	5.0952
CBM-W2	CBM-W2	37.0678
CBM-W1	CBM-W1	20.0566
WEC	WEC	5.9644
O-066	O-066	10.0464
CARR	CARR	0.5667
CHEOAH	CHEOAH	0.0931
CBM-S1	CBM-S1	0.7213
SANTEETLA	SANTEETLA	0.0287
G-007	G-007	1.5538
HAMLET	HAMLET	0.4393
MEC	MEC	27.5352
CANNELTON	CANNELTON	0.1108
GIBSON	GIBSON	0.0631
Z1-043	Z1-043	20.9586
CALDERWOOD	CALDERWOOD	0.0934
TRIMBLE	TRIMBLE	0.5977
CHOCTAW /* 35% REVERSE 4566958 4511400	CHOCTAW /* 35% REVERSE 4566958 4511400	0.0000
RENSSELAER	RENSSELAER	0.4480
CATAWBA	CATAWBA	0.2352

11.6.4 Index 4

ID	FROM BUS#	FROM BUS	FROM BUS AREA	TO BUS#	TO BUS	TO BUS AREA	CKT ID	CONT NAME	Type	Rating MVA	PRE PROJECT LOADING %	POST PROJECT LOADING %	AC|DC	MW IMPACT
363487	270644	WILTON ;	CE	243206	05DUMONT	AEP	1	COMED_P7_345-L94507_B-S_+_345-L97008_R-S	tower	4105.0	81.69	83.35	AC	92.23

Bus #	Bus	MW Impact
270859	PWR VTR EC;R	27.3182
274722	S-055 E	25.0889
274772	LINCOLN ;3U	4.2397
274773	LINCOLN ;4U	4.2397
274774	LINCOLN ;5U	4.2397
274775	LINCOLN ;6U	4.2397
274776	LINCOLN ;7U	4.2397
274777	LINCOLN ;8U	4.2397
274832	U4-027 (Withdrawn : 05/29/2019)	23.8195
274859	EASYR;U1 E	24.7313
274860	EASYR;U2 E	24.7313
274888	PILOT HIL;1E	37.6159
274890	CAYUG;1U E	30.6235

© PJM Interconnection 2020. All rights reserved

Bus #	Bus	MW Impact
274891	CAYUG;2U E	30.6235
275149	KEMPTON ;1E	37.6159
290021	O50 E	41.8105
290051	GSG-6; E	23.8451
290108	LEEDK;1U E	55.6784
293061	N-015 E	34.9982
293516	O-009 E1	20.2019
293517	O-009 E2	10.2610
293518	O-009 E3	11.3002
293644	O22 E1	21.4870
293645	O22 E2	41.7101
293715	O-029 E	21.8874
293716	O-029 E	12.0005
293717	O-029 E	11.0298
293771	O-035 E	14.0020
294392	P-010 E	44.4478
294401	BSHIL;1U E	3.4124
294410	BSHIL;2U E	3.4124
294763	P-046 E	21.1228
295109	WESTBROOK E	12.7664
295111	SUBLETTE E	5.8295
910542	X3-005 E	1.3372
914641	Y2-103	100.3558
915011	Y3-013 1	8.3630
915021	Y3-013 2	8.3630
915031	Y3-013 3	8.3630
916211	Z1-072 E	10.5961
916221	Z1-073 E	12.3036
916502	Z1-106 E1	3.4025
916504	Z1-106 E2	3.4028
916512	Z1-107 E	6.5194
916522	Z1-108 E	6.6158
917502	Z2-087 E	40.8603
918052	AA1-018 E	34.3102
919221	AA1-146	39.4785
919581	AA2-030	39.4785
919621	AA2-039 C	4.5722
919622	AA2-039 E	30.5987
920272	AA2-123 E	6.4998
924041	AB2-047 C O1	7.6320
924042	AB2-047 E O1	51.0754
924471	AB2-096	95.6135
925161	AB2-173	7.0408
925302	AB2-191 E	3.1576
925581	AC1-033 C	3.0719
925582	AC1-033 E	20.5655
926311	AC1-109 1	4.4239
926321	AC1-109 2	4.4239
926331	AC1-110 1	4.3498
926341	AC1-110 2	4.3498
926351	AC1-111 1	1.7565
926361	AC1-111 2	1.7565

© PJM Interconnection 2020. All rights reserved

Bus #	Bus	MW Impact
926371	AC1-111 3	1.7565
926381	AC1-111 4	1.7565
926391	AC1-111 5	1.7565
926401	AC1-111 6	1.7565
926431	AC1-114	5.3700
926821	AC1-168 C O1	2.5321
926822	AC1-168 E O1	16.9922
927091	AC1-204 1	156.4765
927101	AC1-204 2	156.5097
927201	AC1-214 C O1	4.4939
927202	AC1-214 E O1	14.2859
927451	AC1-142A 1	9.0078
927461	AC1-142A 2	9.0070
927511	AC1-113 1	2.6850
927521	AC1-113 2	2.6850
930481	AB1-089	148.7211
930501	AB1-091 O1	147.7206
930741	AB1-122 1O1	165.5445
930751	AB1-122 2O1	160.2074
932881	AC2-115 1	5.3700
932891	AC2-115 2	5.3700
932921	AC2-116	1.8795
932931	AC2-117	12.6911
933341	AC2-147 C	1.9627
933342	AC2-147 E	3.2024
933411	AC2-154 C	5.1050
933412	AC2-154 E	8.3292
933431	AC2-156 C O1	2.2379
933432	AC2-156 E O1	3.6513
933911	AD1-013 C	4.1997
933912	AD1-013 E	6.7086
933931	AD1-016 C	2.0994
933932	AD1-016 E	3.4254
934051	AD1-031 C O1	6.2372
934052	AD1-031 E O1	10.1765
934101	AD1-039 1	16.2234
934111	AD1-039 2	15.7003
934431	AD1-067 C	0.2994
934432	AD1-067 E	1.2589
934651	AD1-096 C	2.0108
934652	AD1-096 E	3.2808
934701	AD1-098 C O1	15.6808
934702	AD1-098 E O1	11.4486
934721	AD1-100 C	43.3398
934722	AD1-100 E	202.2524
934871	AD1-116 C	1.9981
934872	AD1-116 E	3.2601
934971	AD1-129 C	2.0420
934972	AD1-129 E	1.3614
935001	AD1-133 C O1	47.5111
935002	AD1-133 E O1	31.6741
936291	AD2-038 C O1	4.9735

© PJM Interconnection 2020. All rights reserved

Bus #	Bus	MW Impact
936292	AD2-038 E O1	33.2842
936371	AD2-047 C O1	9.1353
936372	AD2-047 E O1	44.6017
936461	AD2-060	5.3737
936511	AD2-066 C O1	18.2290
936512	AD2-066 E O1	12.1526
936791	AD2-102 C	31.8536
936792	AD2-102 E	21.2357
937001	AD2-134 C	6.2335
937002	AD2-134 E	25.7505
937311	AD2-172 C	5.5447
937312	AD2-172 E	7.6570
937321	AD2-175 C	33.0430
937322	AD2-175 E	22.0287
937401	AD2-194 1	16.8269
937411	AD2-194 2	16.8305
937531	AD2-214 C	9.8519
937532	AD2-214 E	6.5679
938511	AE1-070 1	19.7717
938521	AE1-070 2	18.0928
938851	AE1-113 C O1	17.2468
938852	AE1-113 E O1	61.1478
938861	AE1-114 C O1	8.8492
938862	AE1-114 E O1	30.1913
939051	AE1-134 1	3.0678
939061	AE1-134 2	3.0678
939321	AE1-163 C O1	12.4975
939322	AE1-163 E O1	76.7704
939351	AE1-166 C O1	22.3073
939352	AE1-166 E O1	20.5914
939401	AE1-172 C O1	11.9579
939402	AE1-172 E O1	55.9846
939631	AE1-193 C O1	17.9209
939632	AE1-193 E O1	119.9321
939641	AE1-194 C	17.9209
939642	AE1-194 E	119.9321
939651	AE1-195 C	17.9209
939652	AE1-195 E	119.9321
939681	AE1-198 C O1	53.2113
939682	AE1-198 E O1	45.2158
939731	**AE1-204 E (Withdrawn : 11/18/2019)**	**1.2307**
939741	AE1-205 C O1	19.7707
939742	AE1-205 E O1	27.3023
940101	AE1-252 C O1	23.9797
940102	AE1-252 E O1	15.9865
CHILHOWEE	CHILHOWEE	0.0778
BLUEG	BLUEG	17.0039
CBM-W2	CBM-W2	140.5604
CBM-W1	CBM-W1	76.9780
WEC	WEC	20.9182
O-066	O-066	35.2733
CARR	CARR	1.9841

© PJM Interconnection 2020. All rights reserved

Bus #	Bus	MW Impact
ROWAN /* 35% REVERSE 4479078	ROWAN /* 35% REVERSE 4479078	0.0000
CHEOAH	CHEOAH	0.2603
CBM-S1	CBM-S1	3.2683
SANTEETLA	SANTEETLA	0.0814
G-007	G-007	5.4538
DEARBORN /* 35% REVERSE 4540149	DEARBORN /* 35% REVERSE 4540149	0.0000
HAMLET	HAMLET	1.5226
MEC	MEC	98.0318
CANNELTON	CANNELTON	0.2670
GIBSON	GIBSON	0.0909
Z1-043	Z1-043	73.7672
CALDERWOOD	CALDERWOOD	0.2533
TRIMBLE	TRIMBLE	2.0140
CHOCTAW /* 35% REVERSE 4566958 4511400	CHOCTAW /* 35% REVERSE 4566958 4511400	0.0000
RENSSELAER	RENSSELAER	1.5681
AE1-042	AE1-042	0.0000
CATAWBA	CATAWBA	0.8099

11.6.5 Index 5

ID	FROM BUS#	FROM BUS	FROM BUS AREA	TO BUS#	TO BUS	TO BUS AREA	CKT ID	CONT NAME	Type	Rating MVA	PRE PROJECT LOADING %	POST PROJECT LOADING %	AC|DC	MW IMPACT
689445	270855	POWERTON ; R	CE	349662	7TAZEWELL	AMIL	1	COMED_P7_345-L19601_B-S_+_345-L9801__R-S_FSA	tower	1479.0	101.79	110.5	AC	132.37

Bus #	Bus	MW Impact
274677	POWERTON ;5U	77.6137
274678	POWERTON ;6U	77.8053
274861	TOP CROP ;1U	2.0592
274862	TOP CROP ;2U	3.9974
274879	MINONK ;1U	2.4432
290021	O50 E	70.5984
293644	O22 E1	59.5027
293645	O22 E2	115.5053
918051	AA1-018 C	1.9733
918052	AA1-018 E	95.3955
934871	AD1-116 C	5.5556
934872	AD1-116 E	9.0644
936291	AD2-038 C O1	14.2535
936292	AD2-038 E O1	95.3890
938851	AE1-113 C O1	29.1218
938852	AE1-113 E O1	103.2502
939321	AE1-163 C O1	35.8165
939322	AE1-163 E O1	220.0159

© PJM Interconnection 2020. All rights reserved

Bus #	Bus	MW Impact
DUCKCREEK	DUCKCREEK	17.1562
NEWTON	NEWTON	3.2986
CHILHOWEE	CHILHOWEE	0.2795
BLUEG	BLUEG	5.3657
BAYOU /* 35% REVERSE 4392716	BAYOU /* 35% REVERSE 4392716	0.0000
BIG_CAJUN1 /* 35% REVERSE 4646887 4392735	BIG_CAJUN1 /* 35% REVERSE 4646887 4392735	0.0000
TVA	TVA	3.4055
PRAIRIE	PRAIRIE	8.2966
AE1-080A	AE1-080A	0.0000
WEC	WEC	0.2148
O-066	O-066	5.5306
COFFEEN	COFFEEN	1.7594
CARR	CARR	0.3006
EDWARDS	EDWARDS	8.5963
CHEOAH	CHEOAH	0.7778
TILTON	TILTON	1.1970
SANTEETLA	SANTEETLA	0.2276
SMITHLAND	SMITHLAND	0.4714
COTTONWOOD	COTTONWOOD	5.1051
G-007	G-007	0.8570
HAMLET	HAMLET	0.7113
UNIONPOWER	UNIONPOWER	1.7631
CANNELTON	CANNELTON	0.4330
GIBSON	GIBSON	0.2948
CALDERWOOD	CALDERWOOD	0.8529
FARMERCITY	FARMERCITY	1.3408
TRIMBLE	TRIMBLE	0.5788
RENSSELAER	RENSSELAER	0.2379
CATAWBA	CATAWBA	0.4504
TATANKA	TATANKA	1.9977

11.6.6 Index 6

ID	FROM BUS#	FROM BUS	FROM BUS AREA	TO BUS#	TO BUS	TO BUS AREA	CKT ID	CONT NAME	Type	Rating MVA	PRE PROJECT LOADING %	POST PROJECT LOADING %	AC|DC	MW IMPACT
688186	270886	ST JOHN ; T	CE	255104	17GREEN_ACRE	NIPS	1	COMED_P4_023-65-BT2-3__	breaker	1091.0	95.98	97.88	AC	27.44

Bus #	Bus	MW Impact
270859	PWR VTR EC;R	7.6738
274654	BRAIDWOOD;1U	17.1861
274655	BRAIDWOOD;2U	16.4525
274661	LASCO STA;2U	15.8762
274687	WILL CNTY;4U	7.2421
274704	KENDALL ;1C	2.5366

© PJM Interconnection 2020. All rights reserved

Bus #	Bus	MW Impact
274705	KENDALL ;1S	1.6915
274706	KENDALL ;2C	2.5366
274707	KENDALL ;2S	1.6915
274722	S-055 E	7.1749
274751	CRETE EC ;1U	3.0350
274752	CRETE EC ;2U	3.0350
274753	CRETE EC ;3U	3.0350
274754	CRETE EC ;4U	3.0350
274859	EASYR;U1 E	6.9368
274860	EASYR;U2 E	6.9368
274861	TOP CROP ;1U	0.2940
274862	TOP CROP ;2U	0.5707
274888	PILOT HIL;1E	10.8778
274890	CAYUG;1U E	5.0155
274891	CAYUG;2U E	5.0155
275149	KEMPTON ;1E	10.8778
290021	O50 E	12.4413
290051	GSG-6; E	6.6039
290108	LEEDK;1U E	15.3595
293061	N-015 E	9.8634
293516	O-009 E1	5.6840
293517	O-009 E2	2.8870
293518	O-009 E3	3.1794
293644	O22 E1	8.4954
293645	O22 E2	16.4910
293715	O-029 E	6.1440
293716	O-029 E	3.3686
293717	O-029 E	3.0961
294392	P-010 E	12.5265
294763	P-046 E	5.9269
295109	WESTBROOK E	3.5356
295111	SUBLETTE E	1.6326
914641	Y2-103	28.6997
915011	Y3-013 1	2.3916
915021	Y3-013 2	2.3916
915031	Y3-013 3	2.3916
916221	Z1-073 E	3.4075
916502	Z1-106 E1	0.9435
916504	Z1-106 E2	0.9435
916512	Z1-107 E	1.8504
916522	Z1-108 E	1.8606
918052	AA1-018 E	9.8834
919221	AA1-146	11.0750
919581	AA2-030	11.0750
920272	AA2-123 E	1.8250
924471	AB2-096	26.8583
925161	AB2-173	1.9752
925302	AB2-191 E	0.8745
926311	AC1-109 1	1.2077
926321	AC1-109 2	1.2077
926331	AC1-110 1	1.2077
926341	AC1-110 2	1.2077

© PJM Interconnection 2020. All rights reserved

Bus #	Bus	MW Impact
926351	AC1-111 1	0.4828
926361	AC1-111 2	0.4828
926371	AC1-111 3	0.4828
926381	AC1-111 4	0.4828
926391	AC1-111 5	0.4828
926401	AC1-111 6	0.4828
926431	AC1-114	1.5067
926821	AC1-168 C O1	0.7184
926822	AC1-168 E O1	4.8210
927091	AC1-204 1	46.8709
927101	AC1-204 2	46.8092
927451	AC1-142A 1	2.7176
927461	AC1-142A 2	2.7192
927511	AC1-113 1	0.7534
927521	AC1-113 2	0.7534
930481	AB1-089	41.6496
930501	AB1-091 O1	42.9726
930741	AB1-122 1O1	44.9894
930751	AB1-122 2O1	47.8340
932881	AC2-115 1	1.5067
932891	AC2-115 2	1.5067
932921	AC2-116	0.5273
933341	AC2-147 C	0.5502
933342	AC2-147 E	0.8977
933411	AC2-154 C	1.4763
933412	AC2-154 E	2.4087
933431	AC2-156 C O1	0.6048
933432	AC2-156 E O1	0.9868
933911	AD1-013 C	1.1627
933912	AD1-013 E	1.8572
933931	AD1-016 C	0.5895
933932	AD1-016 E	0.9618
934101	AD1-039 1	4.4090
934111	AD1-039 2	4.6877
934431	AD1-067 C	0.0829
934432	AD1-067 E	0.3487
934651	AD1-096 C	0.5635
934652	AD1-096 E	0.9194
934701	AD1-098 C O1	4.3451
934702	AD1-098 E O1	3.1723
934721	AD1-100 C	12.1189
934722	AD1-100 E	56.5547
934871	AD1-116 C	0.5756
934872	AD1-116 E	0.9391
934971	AD1-129 C	0.5730
934972	AD1-129 E	0.3820
935001	AD1-133 C O1	12.8704
935002	AD1-133 E O1	8.5802
936291	AD2-038 C O1	1.4530
936292	AD2-038 E O1	9.7237
936371	AD2-047 C O1	2.6417
936372	AD2-047 E O1	12.8980

© PJM Interconnection 2020. All rights reserved

Bus #	Bus	MW Impact
936461	AD2-060	1.5540
936511	AD2-066 C O1	5.2587
936512	AD2-066 E O1	3.5058
936791	AD2-102 C	8.9536
936792	AD2-102 E	5.9690
937001	AD2-134 C	1.7264
937002	AD2-134 E	7.1316
937311	AD2-172 C	1.5558
937312	AD2-172 E	2.1485
937321	AD2-175 C	9.6102
937322	AD2-175 E	6.4068
937401	AD2-194 1	5.0403
937411	AD2-194 2	5.0337
938511	AE1-070 1	5.9224
938521	AE1-070 2	5.4112
938851	AE1-113 C O1	5.1320
938852	AE1-113 E O1	18.1954
938861	AE1-114 C O1	2.4814
938862	AE1-114 E O1	8.4658
939051	AE1-134 1	0.8606
939061	AE1-134 2	0.8606
939321	AE1-163 C O1	3.6510
939322	AE1-163 E O1	22.4278
939351	AE1-166 C O1	6.4563
939352	AE1-166 E O1	5.9597
939401	AE1-172 C O1	3.2292
939402	AE1-172 E O1	15.1187
939631	AE1-193 C O1	18.9508
939632	AE1-193 E O1	126.8243
939641	AE1-194 C	18.9508
939642	AE1-194 E	126.8243
939651	AE1-195 C	18.9508
939652	AE1-195 E	126.8243
939681	AE1-198 C O1	56.2692
939682	AE1-198 E O1	47.8142
939731	**AE1-204 E (Withdrawn : 11/18/2019)**	**0.3521**
940101	AE1-252 C O1	6.4757
940102	AE1-252 E O1	4.3172
CHILHOWEE	CHILHOWEE	0.0291
BLUEG	BLUEG	5.0952
CBM-W2	CBM-W2	37.0678
CBM-W1	CBM-W1	20.0566
WEC	WEC	5.9644
O-066	O-066	10.0464
CARR	CARR	0.5667
CHEOAH	CHEOAH	0.0931
CBM-S1	CBM-S1	0.7213
SANTEETLA	SANTEETLA	0.0287
G-007	G-007	1.5538
HAMLET	HAMLET	0.4393
MEC	MEC	27.5352
CANNELTON	CANNELTON	0.1108

© PJM Interconnection 2020. All rights reserved

Bus #	Bus	MW Impact
GIBSON	GIBSON	0.0631
Z1-043	Z1-043	20.9586
CALDERWOOD	CALDERWOOD	0.0934
TRIMBLE	TRIMBLE	0.5977
CHOCTAW /* 35% REVERSE 4566958 4511400	CHOCTAW /* 35% REVERSE 4566958 4511400	0.0000
RENSSELAER	RENSSELAER	0.4480
CATAWBA	CATAWBA	0.2352

11.6.7 Index 7

ID	FROM BUS#	FROM BUS	FROM BUS AREA	TO BUS#	TO BUS	TO BUS AREA	CKT ID	CONT NAME	Type	Rating MVA	PRE PROJECT LOADING %	POST PROJECT LOADING %	AC|DC	MW IMPACT
688076	270716	DRESDEN ; B	CE	275179	DRESDEN ;1M	CE	1	COMED_P4_012-45-BT5-6__	breaker	442.0	123.09	131.49	AC	36.61

Bus #	Bus	MW Impact
274658	DRESDEN ;2U	28.3894
274879	MINONK ;1U	0.6757
290021	O50 E	19.5248
916512	Z1-107 E	1.4912
930751	AB1-122 2O1	128.5355
934111	AD1-039 2	12.5965
938851	AE1-113 C O1	8.0540
938852	AE1-113 E O1	28.5550
NEWTON	NEWTON	0.0235
CHILHOWEE	CHILHOWEE	0.0052
BLUEG	BLUEG	0.8918
CBM-W2	CBM-W2	3.3955
CBM-W1	CBM-W1	4.0414
WEC	WEC	1.0554
O-066	O-066	1.2768
CARR	CARR	0.0717
CHEOAH	CHEOAH	0.0160
CBM-S1	CBM-S1	0.0451
TILTON	TILTON	0.1613
SANTEETLA	SANTEETLA	0.0049
G-007	G-007	0.1976
HAMLET	HAMLET	0.0581
MEC	MEC	5.4100
CANNELTON	CANNELTON	0.0353
GIBSON	GIBSON	0.0308
CALDERWOOD	CALDERWOOD	0.0164
TRIMBLE	TRIMBLE	0.1018
RENSSELAER	RENSSELAER	0.0566
CATAWBA	CATAWBA	0.0315

© PJM Interconnection 2020. All rights reserved

11.6.8 Index 8

ID	FROM BUS#	FROM BUS	FROM BUS AREA	TO BUS#	TO BUS	TO BUS AREA	CKT ID	CONT NAME	Type	Rating MVA	PRE PROJECT LOADING %	POST PROJECT LOADING %	AC|DC	MW IMPACT
689434	270716	DRESDEN ; B	CE	274702	KENDALL ;BU	CE	1	COMED_P7_345-L11620_B-S_+_345-L11622_R-S	tower	1195.0	110.68	114.27	DC	50.07

Bus #	Bus	MW Impact
274658	DRESDEN ;2U	37.4371
274728	ELWOOD EC;5P	3.9334
274730	ELWOOD EC;6P	3.9334
274732	ELWOOD EC;7P	3.9334
274734	ELWOOD EC;8P	3.9334
274736	ELWOOD EC;9P	3.9334
290021	O50 E	22.6970
927091	AC1-204 1	105.6925
927101	AC1-204 2	89.2316
930741	AB1-122 1O1	39.9407
930751	AB1-122 2O1	169.6135
934101	AD1-039 1	3.9142
934111	AD1-039 2	16.6221
936511	AD2-066 C O1	7.8198
936512	AD2-066 E O1	5.2132
937401	AD2-194 1	11.3658
937411	AD2-194 2	9.5957
938511	AE1-070 1	13.3548
938521	AE1-070 2	10.3153
938851	AE1-113 C O1	9.3625
938852	AE1-113 E O1	33.1944
CIN	CIN	0.4753
IPL	IPL	0.1780
BLUEG	BLUEG	0.1904
CBM-W2	CBM-W2	20.2552
CBM-W1	CBM-W1	0.5558
O-066	O-066	1.4784
CBM-S2	CBM-S2	0.1000
CARR	CARR	0.0853
CBM-S1	CBM-S1	1.1367
G-007	G-007	0.2278
MEC	MEC	7.9834
Z1-043	Z1-043	13.4030
TRIMBLE	TRIMBLE	0.0317
RENSSELAER	RENSSELAER	0.0674

© PJM Interconnection 2020. All rights reserved

11.6.9 Index 9

ID	FROM BUS#	FROM BUS	FROM BUS AREA	TO BUS#	TO BUS	TO BUS AREA	CKT ID	CONT NAME	Type	Rating MVA	PRE PROJECT LOADING %	POST PROJECT LOADING %	AC|DC	MW IMPACT
688334	270728	E FRANKFO; B	CE	274750	CRETE EC ;BP	CE	1	COMED_P4_023-65-BT2-3__	breaker	1399.0	111.1	111.13	AC	39.14

Bus #	Bus	MW Impact
270859	PWR VTR EC;R	10.9055
274654	BRAIDWOOD;1U	24.7516
274655	BRAIDWOOD;2U	23.6827
274660	LASCO STA;1U	22.7158
274661	LASCO STA;2U	22.7535
274675	JOLIET 29;7U	10.2018
274676	JOLIET 29;8U	10.2089
274687	WILL CNTY;4U	10.3132
274704	KENDALL ;1C	3.6318
274705	KENDALL ;1S	2.4219
274706	KENDALL ;2C	3.6318
274707	KENDALL ;2S	2.4219
274722	S-055 E	10.1959
274736	ELWOOD EC;9P	2.9253
274832	**U4-027 (Withdrawn : 05/29/2019)**	**9.5718**
274859	EASYR;U1 E	9.8630
274860	EASYR;U2 E	9.8630
274861	TOP CROP ;1U	0.4286
274862	TOP CROP ;2U	0.8319
274888	PILOT HIL;1E	14.6180
274890	CAYUG;1U E	11.5943
274891	CAYUG;2U E	11.5943
275149	KEMPTON ;1E	14.6180
290021	O50 E	17.7439
290051	GSG-6; E	9.3834
290108	LEEDK;1U E	21.8195
293061	N-015 E	14.0923
293516	O-009 E1	8.0822
293517	O-009 E2	4.1051
293518	O-009 E3	4.5209
293644	O22 E1	12.3836
293645	O22 E2	24.0388
293715	O-029 E	8.7369
293716	O-029 E	4.7903
293717	O-029 E	4.4028
293771	O-035 E	5.6424
294392	P-010 E	17.8972
294401	BSHIL;1U E	7.5555
294410	BSHIL;2U E	7.5555
294763	P-046 E	8.4245
295109	WESTBROOK E	5.0238

© PJM Interconnection 2020. All rights reserved

Bus #	Bus	MW Impact
295111	SUBLETTE E	2.3213
914641	Y2-103	40.7837
915011	Y3-013 1	3.3986
915021	Y3-013 2	3.3986
915031	Y3-013 3	3.3986
916211	Z1-072 E	4.2699
916221	Z1-073 E	4.8417
916502	Z1-106 E1	1.3398
916504	Z1-106 E2	1.3397
916512	Z1-107 E	2.5648
916522	Z1-108 E	2.6436
918052	AA1-018 E	13.8179
919221	AA1-146	15.7498
919581	AA2-030	15.7498
919621	AA2-039 C	1.8416
919622	AA2-039 E	12.3249
920272	AA2-123 E	2.5934
924471	AB2-096	38.1692
925161	AB2-173	2.8089
925302	AB2-191 E	1.2426
925581	AC1-033 C	1.2373
925582	AC1-033 E	8.2834
926311	AC1-109 1	1.7137
926321	AC1-109 2	1.7137
926331	AC1-110 1	1.7156
926341	AC1-110 2	1.7156
926351	AC1-111 1	0.6848
926361	AC1-111 2	0.6848
926371	AC1-111 3	0.6848
926381	AC1-111 4	0.6848
926391	AC1-111 5	0.6848
926401	AC1-111 6	0.6848
926431	AC1-114	2.1415
926821	AC1-168 C O1	1.0220
926822	AC1-168 E O1	6.8586
927091	AC1-204 1	66.8134
927101	AC1-204 2	66.6996
927201	AC1-214 C O1	1.8109
927202	AC1-214 E O1	5.7568
927451	AC1-142A 1	4.5526
927461	AC1-142A 2	4.5558
927511	AC1-113 1	1.0707
927521	AC1-113 2	1.0707
930481	AB1-089	59.1948
930501	AB1-091 O1	57.5913
930741	AB1-122 1O1	63.5913
930751	AB1-122 2O1	68.2295
932881	AC2-115 1	2.1415
932891	AC2-115 2	2.1415
932921	AC2-116	0.7495
933341	AC2-147 C	0.7822
933342	AC2-147 E	1.2763

© PJM Interconnection 2020. All rights reserved

Bus #	Bus	MW Impact
933411	AC2-154 C	1.9839
933412	AC2-154 E	3.2368
933431	AC2-156 C O1	0.8585
933432	AC2-156 E O1	1.4008
933911	AD1-013 C	1.6521
933912	AD1-013 E	2.6391
933931	AD1-016 C	0.8377
933932	AD1-016 E	1.3667
934051	AD1-031 C O1	2.5122
934052	AD1-031 E O1	4.0988
934101	AD1-039 1	6.2319
934111	AD1-039 2	6.6865
934431	AD1-067 C	0.1178
934432	AD1-067 E	0.4954
934651	AD1-096 C	0.8010
934652	AD1-096 E	1.3070
934701	AD1-098 C O1	6.1742
934702	AD1-098 E O1	4.5078
934721	AD1-100 C	17.0059
934722	AD1-100 E	79.3611
934871	AD1-116 C	0.8047
934872	AD1-116 E	1.3130
934971	AD1-129 C	0.8144
934972	AD1-129 E	0.5429
935001	AD1-133 C O1	18.1489
935002	AD1-133 E O1	12.0992
936291	AD2-038 C O1	2.0512
936292	AD2-038 E O1	13.7270
936371	AD2-047 C O1	3.5501
936372	AD2-047 E O1	17.3327
936461	AD2-060	2.0883
936511	AD2-066 C O1	7.4435
936512	AD2-066 E O1	4.9623
936791	AD2-102 C	12.7265
936792	AD2-102 E	8.4844
937001	AD2-134 C	2.4530
937002	AD2-134 E	10.1333
937311	AD2-172 C	2.2114
937312	AD2-172 E	3.0539
937321	AD2-175 C	12.8827
937322	AD2-175 E	8.5884
937401	AD2-194 1	7.1849
937411	AD2-194 2	7.1726
937531	AD2-214 C	3.9372
937532	AD2-214 E	2.6248
938511	AE1-070 1	8.4422
938521	AE1-070 2	7.7106
938851	AE1-113 C O1	7.3194
938852	AE1-113 E O1	25.9505
938861	AE1-114 C O1	3.5275
938862	AE1-114 E O1	12.0351
939051	AE1-134 1	1.2239

© PJM Interconnection 2020. All rights reserved

Bus #	Bus	MW Impact
939061	AE1-134 2	1.2239
939321	AE1-163 C O1	5.1542
939322	AE1-163 E O1	31.6614
939351	AE1-166 C O1	9.1037
939352	AE1-166 E O1	8.4034
939401	AE1-172 C O1	4.5209
939402	AE1-172 E O1	21.1661
939683	AE1-198 BAT	44.4422
939731	**AE1-204 E (Withdrawn : 11/18/2019)**	**0.5004**
940101	AE1-252 C O1	9.0660
940102	AE1-252 E O1	6.0440
CHILHOWEE	CHILHOWEE	0.0220
BLUEG	BLUEG	6.7385
CBM-W2	CBM-W2	53.9275
CBM-W1	CBM-W1	26.9698
WEC	WEC	8.4794
O-066	O-066	13.1846
CARR	CARR	0.7449
CHEOAH	CHEOAH	0.0776
CBM-S1	CBM-S1	1.3170
SANTEETLA	SANTEETLA	0.0245
G-007	G-007	2.0384
HAMLET	HAMLET	0.5480
MEC	MEC	39.2330
CANNELTON	CANNELTON	0.1352
GIBSON	GIBSON	0.0797
Z1-043	Z1-043	29.7960
CALDERWOOD	CALDERWOOD	0.0732
TRIMBLE	TRIMBLE	0.7919
CHOCTAW /* 35% REVERSE 4566958 4511400	CHOCTAW /* 35% REVERSE 4566958 4511400	0.0000
RENSSELAER	RENSSELAER	0.5886
CATAWBA	CATAWBA	0.2891

11.6.10 Index 10

ID	FROM BUS#	FROM BUS	FROM BUS AREA	TO BUS#	TO BUS	TO BUS AREA	CKT ID	CONT NAME	Type	Rating MVA	PRE PROJECT LOADING %	POST PROJECT LOADING %	AC|DC	MW IMPACT
688295	270736	ELWOOD ; B	CE	270770	GOODINGS ;4B	CE	1	COMED_P4_116-45-L11614_	breaker	1479.0	116.29	117.84	AC	26.96

Bus #	Bus	MW Impact
274728	ELWOOD EC;5P	6.8133
274730	ELWOOD EC;6P	6.8133
274732	ELWOOD EC;7P	6.8133
274734	ELWOOD EC;8P	6.8133
274735	ELWOOD EC;4P	6.7670
274736	ELWOOD EC;9P	6.8133

© PJM Interconnection 2020. All rights reserved

Bus #	Bus	MW Impact
290021	O50 E	12.2223
927091	AC1-204 1	183.0746
927101	AC1-204 2	154.5558
930741	AB1-122 1O1	68.8551
930751	AB1-122 2O1	70.4826
934101	AD1-039 1	6.7478
934111	AD1-039 2	6.9073
935001	AD1-133 C O1	14.8685
935002	AD1-133 E O1	9.9124
936511	AD2-066 C O1	4.4364
936512	AD2-066 E O1	2.9576
937401	AD2-194 1	19.6872
937411	AD2-194 2	16.6204
938511	AE1-070 1	23.1325
938521	AE1-070 2	17.8669
938851	AE1-113 C O1	5.0417
938852	AE1-113 E O1	17.8751
939683	AE1-198 BAT	6.4952
BLUEG	BLUEG	1.7936
CBM-W2	CBM-W2	19.5242
CBM-W1	CBM-W1	3.7693
WEC	WEC	1.0474
O-066	O-066	4.0253
CARR	CARR	0.2282
CHEOAH	CHEOAH	0.0015
CBM-S1	CBM-S1	0.5925
SANTEETLA	SANTEETLA	0.0010
G-007	G-007	0.6219
HAMLET	HAMLET	0.1524
MEC	MEC	10.6630
CANNELTON	CANNELTON	0.0161
GIBSON	GIBSON	0.0019
Z1-043	Z1-043	10.5534
TRIMBLE	TRIMBLE	0.2137
RENSSELAER	RENSSELAER	0.1801
CATAWBA	CATAWBA	0.0784

11.6.11 Index 11

ID	FROM BUS#	FROM BUS	FROM BUS AREA	TO BUS#	TO BUS	TO BUS AREA	CKT ID	CONT NAME	Type	Rating MVA	PRE PROJECT LOADING %	POST PROJECT LOADING %	AC|DC	MW IMPACT
688231	270770	GOODINGS ;4B	CE	270766	GOODINGS ;3B	CE	1	COMED_P4_116-45-L11614_	breaker	1802.0	112.28	114.55	AC	48.08

Bus #	Bus	MW Impact
270859	PWR VTR EC;R	6.7575
274722	S-055 E	6.2692
274728	ELWOOD EC;5P	4.2827

© PJM Interconnection 2020. All rights reserved

Bus #	Bus	MW Impact
274730	ELWOOD EC;6P	4.2827
274732	ELWOOD EC;7P	4.2827
274734	ELWOOD EC;8P	4.2827
274735	ELWOOD EC;4P	4.2584
274736	ELWOOD EC;9P	4.2827
274832	**U4-027 (Withdrawn : 05/29/2019)**	**6.9734**
274859	EASYR;U1 E	6.5615
274860	EASYR;U2 E	6.5615
274861	TOP CROP ;1U	0.8571
274862	TOP CROP ;2U	1.6637
290021	O50 E	21.7981
293516	O-009 E1	5.6617
293517	O-009 E2	2.8757
293518	O-009 E3	3.1669
293644	O22 E1	24.7648
293645	O22 E2	48.0728
293715	O-029 E	6.0083
293716	O-029 E	3.2942
293717	O-029 E	3.0278
293771	O-035 E	4.0236
294401	BSHIL;1U E	5.6093
294410	BSHIL;2U E	5.6093
294763	P-046 E	5.4094
295111	SUBLETTE E	1.5479
914641	Y2-103	25.0767
915011	Y3-013 1	2.0897
915021	Y3-013 2	2.0897
915031	Y3-013 3	2.0897
916211	Z1-072 E	3.0449
916502	Z1-106 E1	0.7768
916504	Z1-106 E2	0.7762
916522	Z1-108 E	1.5966
918052	AA1-018 E	16.6354
919221	AA1-146	10.7881
919581	AA2-030	10.7881
919621	AA2-039 C	1.3673
919622	AA2-039 E	9.1502
920272	AA2-123 E	1.5910
924471	AB2-096	23.6512
925161	AB2-173	1.9240
925581	AC1-033 C	0.9187
925582	AC1-033 E	6.1507
926331	AC1-110 1	1.0222
926341	AC1-110 2	1.0222
926431	AC1-114	1.3491
927091	AC1-204 1	115.0772
927101	AC1-204 2	97.2607
927201	AC1-214 C O1	1.2914
927202	AC1-214 E O1	4.1051
927451	AC1-142A 1	3.0907
927461	AC1-142A 2	3.1201
927511	AC1-113 1	0.6746

© PJM Interconnection 2020. All rights reserved

Bus #	Bus	MW Impact
927521	AC1-113 2	0.6746
930481	AB1-089	37.2971
930741	AB1-122 1O1	55.4682
930751	AB1-122 2O1	81.0152
932881	AC2-115 1	1.3491
932891	AC2-115 2	1.3491
932921	AC2-116	0.4722
933341	AC2-147 C	0.5158
933342	AC2-147 E	0.8415
933931	AD1-016 C	0.5139
933932	AD1-016 E	0.8385
934051	AD1-031 C O1	1.8646
934052	AD1-031 E O1	3.0423
934101	AD1-039 1	5.4359
934111	AD1-039 2	7.9395
934651	AD1-096 C	0.5132
934652	AD1-096 E	0.8374
934871	AD1-116 C	0.9688
934872	AD1-116 E	1.5807
934971	AD1-129 C	0.5063
934972	AD1-129 E	0.3375
935001	AD1-133 C O1	12.4894
935002	AD1-133 E O1	8.3263
936291	AD2-038 C O1	2.5293
936292	AD2-038 E O1	16.9272
936511	AD2-066 C O1	5.4788
936512	AD2-066 E O1	3.6525
936791	AD2-102 C	8.0947
936792	AD2-102 E	5.3965
937311	AD2-172 C	1.4200
937312	AD2-172 E	1.9609
937401	AD2-194 1	12.3750
937411	AD2-194 2	10.4591
937531	AD2-214 C	2.7761
937532	AD2-214 E	1.8508
938511	AE1-070 1	14.5406
938521	AE1-070 2	11.2435
938851	AE1-113 C O1	8.9917
938852	AE1-113 E O1	31.8797
938861	AE1-114 C O1	2.3045
938862	AE1-114 E O1	7.8624
939051	AE1-134 1	0.8383
939061	AE1-134 2	0.8383
939321	AE1-163 C O1	6.3558
939322	AE1-163 E O1	39.0427
939683	AE1-198 BAT	25.7984
939731	**AE1-204 E (Withdrawn : 11/18/2019)**	**0.3083**
990901	L-005 E	8.2773
BLUEG	BLUEG	2.9058
CBM-W2	CBM-W2	45.8867
CBM-W1	CBM-W1	18.0995
WEC	WEC	5.3612

© PJM Interconnection 2020. All rights reserved

Bus #	Bus	MW Impact
O-066	O-066	6.3235
CARR	CARR	0.3613
CBM-S1	CBM-S1	2.0962
G-007	G-007	0.9776
HAMLET	HAMLET	0.1443
MEC	MEC	29.4848
CANNELTON	CANNELTON	0.0037
GIBSON	GIBSON	0.0093
Z1-043	Z1-043	19.6794
TRIMBLE	TRIMBLE	0.3495
CHOCTAW /* 35% REVERSE 4566958 4511400	CHOCTAW /* 35% REVERSE 4566958 4511400	0.0000
RENSSELAER	RENSSELAER	0.2856
CATAWBA	CATAWBA	0.0577

11.6.12 Index 12

ID	FROM BUS#	FROM BUS	FROM BUS AREA	TO BUS#	TO BUS	TO BUS AREA	CKT ID	CONT NAME	Type	Rating MVA	PRE PROJECT LOADING %	POST PROJECT LOADING %	AC|DC	MW IMPACT
361901	270771	GREENACRE ; T	CE	243229	05OLIVE	AEP	1	AEP_P4_#2978_05DUMONT 765_B	breaker	971.0	109.73	110.9	AC	24.32

Bus #	Bus	MW Impact
270859	PWR VTR EC;R	6.8433
274722	S-055 E	6.3870
274751	CRETE EC ;1U	1.7423
274752	CRETE EC ;2U	1.7423
274753	CRETE EC ;3U	1.7423
274754	CRETE EC ;4U	1.7423
274832	**U4-027 (Withdrawn : 05/29/2019)**	**6.0401**
274859	EASYR;U1 E	6.1983
274860	EASYR;U2 E	6.1983
274888	PILOT HIL;1E	10.5279
274890	CAYUG;1U E	7.5725
274891	CAYUG;2U E	7.5725
275149	KEMPTON ;1E	10.5279
290021	O50 E	11.0255
290051	GSG-6; E	5.8965
290108	LEEDK;1U E	13.7071
293061	N-015 E	8.6935
293516	O-009 E1	5.0899
293517	O-009 E2	2.5853
293518	O-009 E3	2.8471
293644	O22 E1	6.1495
293645	O22 E2	11.9372
293715	O-029 E	5.4976
293716	O-029 E	3.0142
293717	O-029 E	2.7704

© PJM Interconnection 2020. All rights reserved

Bus #	Bus	MW Impact
293771	O-035 E	3.5652
294392	P-010 E	11.0407
294401	BSHIL;1U E	4.7722
294410	BSHIL;2U E	4.7722
294763	P-046 E	5.2918
295109	WESTBROOK E	3.1569
295111	SUBLETTE E	1.4597
910542	X3-005 E	0.4404
914641	Y2-103	25.5479
915011	Y3-013 1	2.1290
915021	Y3-013 2	2.1290
915031	Y3-013 3	2.1290
916211	Z1-072 E	2.6980
916221	Z1-073 E	3.0425
916502	Z1-106 E1	0.8408
916504	Z1-106 E2	0.8408
916512	Z1-107 E	1.7128
916522	Z1-108 E	1.6574
918052	AA1-018 E	9.0171
919221	AA1-146	9.9047
919581	AA2-030	9.9047
919621	AA2-039 C	1.1632
919622	AA2-039 E	7.7847
920272	AA2-123 E	1.6270
924471	AB2-096	23.9517
925161	AB2-173	1.7664
925302	AB2-191 E	0.7808
925581	AC1-033 C	0.7816
925582	AC1-033 E	5.2323
926311	AC1-109 1	1.0772
926321	AC1-109 2	1.0772
926331	AC1-110 1	1.0757
926341	AC1-110 2	1.0757
926351	AC1-111 1	0.4310
926361	AC1-111 2	0.4310
926371	AC1-111 3	0.4310
926381	AC1-111 4	0.4310
926391	AC1-111 5	0.4310
926401	AC1-111 6	0.4310
926431	AC1-114	1.3445
926821	AC1-168 C O1	0.6424
926822	AC1-168 E O1	4.3107
927091	AC1-204 1	41.4122
927101	AC1-204 2	41.3790
927201	AC1-214 C O1	1.1442
927202	AC1-214 E O1	3.6374
927451	AC1-142A 1	2.4037
927461	AC1-142A 2	2.4045
927511	AC1-113 1	0.6723
927521	AC1-113 2	0.6723
930481	AB1-089	37.1522
930501	AB1-091 O1	41.7337

© PJM Interconnection 2020. All rights reserved

Bus #	Bus	MW Impact
930741	AB1-122 1O1	40.4050
930751	AB1-122 2O1	42.2475
932881	AC2-115 1	1.3445
932891	AC2-115 2	1.3445
932921	AC2-116	0.4706
933341	AC2-147 C	0.4917
933342	AC2-147 E	0.8022
933411	AC2-154 C	1.4288
933412	AC2-154 E	2.3312
933431	AC2-156 C O1	0.5396
933432	AC2-156 E O1	0.8804
933911	AD1-013 C	1.0380
933912	AD1-013 E	1.6582
933931	AD1-016 C	0.5255
933932	AD1-016 E	0.8574
934051	AD1-031 C O1	1.5868
934052	AD1-031 E O1	2.5889
934101	AD1-039 1	3.9597
934111	AD1-039 2	4.1403
934431	AD1-067 C	0.0740
934432	AD1-067 E	0.3113
934651	AD1-096 C	0.5032
934652	AD1-096 E	0.8210
934701	AD1-098 C O1	3.8798
934702	AD1-098 E O1	2.8327
934721	AD1-100 C	10.9892
934722	AD1-100 E	51.2831
934871	AD1-116 C	0.5251
934872	AD1-116 E	0.8568
934971	AD1-129 C	0.5111
934972	AD1-129 E	0.3407
935001	AD1-133 C O1	11.6555
935002	AD1-133 E O1	7.7704
936291	AD2-038 C O1	1.3089
936292	AD2-038 E O1	8.7597
936371	AD2-047 C O1	2.5568
936372	AD2-047 E O1	12.4831
936461	AD2-060	1.5040
936511	AD2-066 C O1	4.7227
936512	AD2-066 E O1	3.1485
936791	AD2-102 C	7.9907
936792	AD2-102 E	5.3271
937001	AD2-134 C	1.5414
937002	AD2-134 E	6.3677
937311	AD2-172 C	1.3891
937312	AD2-172 E	1.9183
937321	AD2-175 C	9.3321
937322	AD2-175 E	6.2214
937401	AD2-194 1	4.4533
937411	AD2-194 2	4.4498
937531	AD2-214 C	2.4800
937532	AD2-214 E	1.6533

© PJM Interconnection 2020. All rights reserved

Bus #	Bus	MW Impact
938511	AE1-070 1	5.2327
938521	AE1-070 2	4.7835
938851	AE1-113 C O1	4.5480
938852	AE1-113 E O1	16.1248
938861	AE1-114 C O1	2.2169
938862	AE1-114 E O1	7.5636
939051	AE1-134 1	0.7697
939061	AE1-134 2	0.7697
939321	AE1-163 C O1	3.2891
939322	AE1-163 E O1	20.2045
939351	AE1-166 C O1	5.8059
939352	AE1-166 E O1	5.3593
939401	AE1-172 C O1	2.9557
939402	AE1-172 E O1	13.8381
939631	AE1-193 C O1	10.8791
939632	AE1-193 E O1	72.8060
939641	AE1-194 C	10.8791
939642	AE1-194 E	72.8060
939651	AE1-195 C	10.8791
939652	AE1-195 E	72.8060
939681	AE1-198 C O1	32.3024
939682	AE1-198 E O1	27.4487
939731	**AE1-204 E (Withdrawn : 11/18/2019)**	**0.3134**
939741	AE1-205 C O1	4.8938
939742	AE1-205 E O1	6.7580
940101	AE1-252 C O1	5.9272
940102	AE1-252 E O1	3.9515
951721	J643	15.4805
952581	J740 C	3.4005
952582	J740 E	18.3975
953871	J847	8.3709
990901	L-005 E	2.9504
CIN	CIN	0.0980
BLUEG	BLUEG	2.9008
CBM-W2	CBM-W2	38.4118
CBM-W1	CBM-W1	19.9987
WEC	WEC	5.3187
O-066	O-066	8.8234
CARR	CARR	0.4994
CHEOAH	CHEOAH	0.0025
CBM-S1	CBM-S1	1.3170
SANTEETLA	SANTEETLA	0.0021
G-007	G-007	1.3645
HAMLET	HAMLET	0.3278
MEC	MEC	25.0081
CANNELTON	CANNELTON	0.0067
Z1-043	Z1-043	18.7954
TRIMBLE	TRIMBLE	0.3484
CHOCTAW /* 35% REVERSE 4566958 4511400	CHOCTAW /* 35% REVERSE 4566958 4511400	0.0000
RENSSELAER	RENSSELAER	0.3948
CATAWBA	CATAWBA	0.1673

© PJM Interconnection 2020. All rights reserved

11.6.13 Index 13

ID	FROM BUS#	FROM BUS	FROM BUS AREA	TO BUS#	TO BUS	TO BUS AREA	CKT ID	CONT NAME	Type	Rating MVA	PRE PROJECT LOADING %	POST PROJECT LOADING %	AC|DC	MW IMPACT
688039	270926	WILTON ; B	CE	275232	WILTON ;3M	CE	1	COMED_P4_112-65-BT5-6__	breaker	1379.0	124.98	127.84	AC	44.48

Bus #	Bus	MW Impact
270859	PWR VTR EC;R	12.5749
274722	S-055 E	11.6785
274772	LINCOLN ;3U	3.0321
274773	LINCOLN ;4U	3.0321
274774	LINCOLN ;5U	3.0321
274775	LINCOLN ;6U	3.0321
274776	LINCOLN ;7U	3.0321
274777	LINCOLN ;8U	3.0321
274832	**U4-027 (Withdrawn : 05/29/2019)**	**11.3101**
274859	EASYR;U1 E	11.4305
274860	EASYR;U2 E	11.4305
274888	PILOT HIL;1E	20.0551
274890	CAYUG;1U E	17.2003
274891	CAYUG;2U E	17.2003
275149	KEMPTON ;1E	20.0551
290021	O50 E	20.1634
290051	GSG-6; E	10.8697
290108	LEEDK;1U E	25.2535
290261	S-027 E	17.3255
290265	S-028 E	17.3255
293061	N-015 E	16.5118
293516	O-009 E1	9.4566
293517	O-009 E2	4.8032
293518	O-009 E3	5.2897
293644	O22 E1	10.6599
293645	O22 E2	20.6928
293715	O-029 E	10.1736
293716	O-029 E	5.5780
293717	O-029 E	5.1268
293771	O-035 E	6.7177
294392	P-010 E	20.9699
294401	BSHIL;1U E	8.9719
294410	BSHIL;2U E	8.9719
294763	P-046 E	9.7444
295109	WESTBROOK E	5.8195
295111	SUBLETTE E	2.6961
910542	X3-005 E	0.7603
914641	Y2-103	46.7140
915011	Y3-013 1	3.8928
915021	Y3-013 2	3.8928
915031	Y3-013 3	3.8928
916211	Z1-072 E	5.0837

© PJM Interconnection 2020. All rights reserved

Bus #	Bus	MW Impact
916221	Z1-073 E	5.6086
916502	Z1-106 E1	1.5453
916504	Z1-106 E2	1.5453
916512	Z1-107 E	3.1642
916522	Z1-108 E	3.0410
917502	Z2-087 E	21.8715
918052	AA1-018 E	17.0924
919221	AA1-146	18.2907
919581	AA2-030	18.2907
919621	AA2-039 C	2.1869
919622	AA2-039 E	14.6354
920272	AA2-123 E	2.9882
924041	AB2-047 C O1	4.0852
924042	AB2-047 E O1	27.3393
924471	AB2-096	44.0121
925161	AB2-173	3.2620
925302	AB2-191 E	1.4394
925581	AC1-033 C	1.4693
925582	AC1-033 E	9.8362
926311	AC1-109 1	1.9882
926321	AC1-109 2	1.9882
926331	AC1-110 1	1.9741
926341	AC1-110 2	1.9741
926351	AC1-111 1	0.7940
926361	AC1-111 2	0.7940
926371	AC1-111 3	0.7940
926381	AC1-111 4	0.7940
926391	AC1-111 5	0.7940
926401	AC1-111 6	0.7940
926431	AC1-114	2.4732
926821	AC1-168 C O1	1.2135
926822	AC1-168 E O1	8.1438
926841	AC1-171 C O1	1.0472
926842	AC1-171 E O1	6.9948
927091	AC1-204 1	75.5113
927101	AC1-204 2	75.5113
927201	AC1-214 C O1	2.1560
927202	AC1-214 E O1	6.8539
927451	AC1-142A 1	4.3504
927461	AC1-142A 2	4.3504
927511	AC1-113 1	1.2366
927521	AC1-113 2	1.2366
930481	AB1-089	68.3485
930501	AB1-091 O1	79.8022
930741	AB1-122 1O1	75.8735
930751	AB1-122 2O1	76.6849
932881	AC2-115 1	2.4732
932891	AC2-115 2	2.4732
932921	AC2-116	0.8656
932931	AC2-117	5.5397
933341	AC2-147 C	0.9072
933342	AC2-147 E	1.4801

© PJM Interconnection 2020. All rights reserved

Bus #	Bus	MW Impact
933411	AC2-154 C	2.7218
933412	AC2-154 E	4.4408
933431	AC2-156 C O1	0.9948
933432	AC2-156 E O1	1.6232
933911	AD1-013 C	1.9136
933912	AD1-013 E	3.0568
933931	AD1-016 C	0.9652
933932	AD1-016 E	1.5748
934051	AD1-031 C O1	2.9832
934052	AD1-031 E O1	4.8673
934101	AD1-039 1	7.4356
934111	AD1-039 2	7.5151
934431	AD1-067 C	0.1365
934432	AD1-067 E	0.5739
934651	AD1-096 C	0.9269
934652	AD1-096 E	1.5123
934701	AD1-098 C O1	7.1533
934702	AD1-098 E O1	5.2227
934721	AD1-100 C	24.9989
934722	AD1-100 E	116.6617
934871	AD1-116 C	0.9954
934872	AD1-116 E	1.6241
934971	AD1-129 C	0.9395
934972	AD1-129 E	0.6263
935001	AD1-133 C O1	23.2805
935002	AD1-133 E O1	15.5203
936291	AD2-038 C O1	2.4471
936292	AD2-038 E O1	16.3770
936371	AD2-047 C O1	4.8705
936372	AD2-047 E O1	23.7796
936461	AD2-060	2.8650
936511	AD2-066 C O1	8.7965
936512	AD2-066 E O1	5.8643
936791	AD2-102 C	14.6982
936792	AD2-102 E	9.7988
937001	AD2-134 C	2.8415
937002	AD2-134 E	11.7383
937311	AD2-172 C	2.5579
937312	AD2-172 E	3.5323
937321	AD2-175 C	17.8571
937322	AD2-175 E	11.9048
937401	AD2-194 1	8.1202
937411	AD2-194 2	8.1202
937531	AD2-214 C	4.5920
937532	AD2-214 E	3.0613
938511	AE1-070 1	9.5413
938521	AE1-070 2	8.7292
938851	AE1-113 C O1	8.3174
938852	AE1-113 E O1	29.4889
938861	AE1-114 C O1	4.0873
938862	AE1-114 E O1	13.9450
939051	AE1-134 1	1.4213

© PJM Interconnection 2020. All rights reserved

Bus #	Bus	MW Impact
939061	AE1-134 2	1.4213
939321	AE1-163 C O1	6.1492
939322	AE1-163 E O1	37.7737
939351	AE1-166 C O1	12.3345
939352	AE1-166 E O1	11.3856
939401	AE1-172 C O1	6.8712
939402	AE1-172 E O1	32.1698
939731	**AE1-204 E (Withdrawn : 11/18/2019)**	**0.5729**
939741	AE1-205 C O1	10.5936
939742	AE1-205 E O1	14.6293
940101	AE1-252 C O1	13.7792
940102	AE1-252 E O1	9.1861
990901	L-005 E	13.1927
CHILHOWEE	CHILHOWEE	0.0320
BLUEG	BLUEG	7.9459
CBM-W2	CBM-W2	71.0465
CBM-W1	CBM-W1	37.3223
WEC	WEC	9.7369
O-066	O-066	17.1830
CARR	CARR	0.9654
CHEOAH	CHEOAH	0.1106
CBM-S1	CBM-S1	1.7678
SANTEETLA	SANTEETLA	0.0350
G-007	G-007	2.6572
HAMLET	HAMLET	0.7354
MEC	MEC	46.5003
CANNELTON	CANNELTON	0.0929
GIBSON	GIBSON	0.0048
Z1-043	Z1-043	35.4614
CALDERWOOD	CALDERWOOD	0.1054
TRIMBLE	TRIMBLE	0.9466
CHOCTAW /* 35% REVERSE 4566958 4511400	CHOCTAW /* 35% REVERSE 4566958 4511400	0.0000
RENSSELAER	RENSSELAER	0.7629
CATAWBA	CATAWBA	0.3899

11.6.14 Index 14

ID	FROM BUS#	FROM BUS	FROM BUS AREA	TO BUS#	TO BUS	TO BUS AREA	CKT ID	CONT NAME	Type	Rating MVA	PRE PROJECT LOADING %	POST PROJECT LOADING %	AC|DC	MW IMPACT
688042	270927	WILTON ; R	CE	275233	WILTON ;4M	CE	1	COMED_P4_112-65-BT2-3__	breaker	1379.0	127.55	130.47	AC	45.43

Bus #	Bus	MW Impact
270859	PWR VTR EC;R	12.8426
274722	S-055 E	11.9271
274772	LINCOLN ;3U	3.1139
274773	LINCOLN ;4U	3.1139

© PJM Interconnection 2020. All rights reserved

Bus #	Bus	MW Impact
274774	LINCOLN ;5U	3.1139
274775	LINCOLN ;6U	3.1139
274776	LINCOLN ;7U	3.1139
274777	LINCOLN ;8U	3.1139
274832	**U4-027 (Withdrawn : 05/29/2019)**	**11.5489**
274859	EASYR;U1 E	11.6729
274860	EASYR;U2 E	11.6729
274888	PILOT HIL;1E	20.4728
274890	CAYUG;1U E	17.5430
274891	CAYUG;2U E	17.5430
275149	KEMPTON ;1E	20.4728
290021	O50 E	20.5931
290051	GSG-6; E	11.1005
290108	LEEDK;1U E	25.7907
290261	S-027 E	17.6769
290265	S-028 E	17.6769
293061	N-015 E	16.8565
293516	O-009 E1	9.6568
293517	O-009 E2	4.9049
293518	O-009 E3	5.4016
293644	O22 E1	10.8854
293645	O22 E2	21.1304
293715	O-029 E	10.3890
293716	O-029 E	5.6961
293717	O-029 E	5.2354
293771	O-035 E	6.8591
294392	P-010 E	21.4078
294401	BSHIL;1U E	9.1610
294410	BSHIL;2U E	9.1610
294763	P-046 E	9.9518
295109	WESTBROOK E	5.9431
295111	SUBLETTE E	2.7533
910542	X3-005 E	0.7769
914641	Y2-103	47.7085
915011	Y3-013 1	3.9757
915021	Y3-013 2	3.9757
915031	Y3-013 3	3.9757
916211	Z1-072 E	5.1907
916221	Z1-073 E	5.7277
916502	Z1-106 E1	1.5782
916504	Z1-106 E2	1.5782
916512	Z1-107 E	3.2314
916522	Z1-108 E	3.1058
917502	Z2-087 E	22.3137
918052	AA1-018 E	17.4651
919221	AA1-146	18.6790
919581	AA2-030	18.6790
919621	AA2-039 C	2.2330
919622	AA2-039 E	14.9438
920272	AA2-123 E	3.0520
924041	AB2-047 C O1	4.1678
924042	AB2-047 E O1	27.8921

© PJM Interconnection 2020. All rights reserved

Bus #	Bus	MW Impact
924471	AB2-096	44.9493
925161	AB2-173	3.3313
925302	AB2-191 E	1.4699
925581	AC1-033 C	1.5002
925582	AC1-033 E	10.0434
926311	AC1-109 1	2.0306
926321	AC1-109 2	2.0306
926331	AC1-110 1	2.0162
926341	AC1-110 2	2.0162
926351	AC1-111 1	0.8109
926361	AC1-111 2	0.8109
926371	AC1-111 3	0.8109
926381	AC1-111 4	0.8109
926391	AC1-111 5	0.8109
926401	AC1-111 6	0.8109
926431	AC1-114	2.5257
926821	AC1-168 C O1	1.2390
926822	AC1-168 E O1	8.3149
926841	AC1-171 C O1	1.0691
926842	AC1-171 E O1	7.1410
927091	AC1-204 1	77.1285
927101	AC1-204 2	77.1285
927201	AC1-214 C O1	2.2014
927202	AC1-214 E O1	6.9982
927451	AC1-142A 1	4.4439
927461	AC1-142A 2	4.4439
927511	AC1-113 1	1.2628
927521	AC1-113 2	1.2628
930481	AB1-089	69.8024
930501	AB1-091 O1	81.4572
930741	AB1-122 1O1	77.4815
930751	AB1-122 2O1	78.3222
932881	AC2-115 1	2.5257
932891	AC2-115 2	2.5257
932921	AC2-116	0.8840
932931	AC2-117	5.6601
933341	AC2-147 C	0.9264
933342	AC2-147 E	1.5115
933411	AC2-154 C	2.7784
933412	AC2-154 E	4.5333
933431	AC2-156 C O1	1.0160
933432	AC2-156 E O1	1.6576
933911	AD1-013 C	1.9543
933912	AD1-013 E	3.1219
933931	AD1-016 C	0.9857
933932	AD1-016 E	1.6083
934051	AD1-031 C O1	3.0462
934052	AD1-031 E O1	4.9702
934101	AD1-039 1	7.5932
934111	AD1-039 2	7.6756
934431	AD1-067 C	0.1394
934432	AD1-067 E	0.5861

© PJM Interconnection 2020. All rights reserved

Bus #	Bus	MW Impact
934651	AD1-096 C	0.9466
934652	AD1-096 E	1.5444
934701	AD1-098 C O1	7.3056
934702	AD1-098 E O1	5.3339
934721	AD1-100 C	25.4949
934722	AD1-100 E	118.9762
934871	AD1-116 C	1.0171
934872	AD1-116 E	1.6595
934971	AD1-129 C	0.9595
934972	AD1-129 E	0.6397
935001	AD1-133 C O1	23.7624
935002	AD1-133 E O1	15.8416
936291	AD2-038 C O1	2.5000
936292	AD2-038 E O1	16.7308
936371	AD2-047 C O1	4.9720
936372	AD2-047 E O1	24.2748
936461	AD2-060	2.9247
936511	AD2-066 C O1	8.9829
936512	AD2-066 E O1	5.9886
936791	AD2-102 C	15.0103
936792	AD2-102 E	10.0069
937001	AD2-134 C	2.9018
937002	AD2-134 E	11.9875
937311	AD2-172 C	2.6123
937312	AD2-172 E	3.6075
937321	AD2-175 C	18.2272
937322	AD2-175 E	12.1515
937401	AD2-194 1	8.2941
937411	AD2-194 2	8.2941
937531	AD2-214 C	4.6891
937532	AD2-214 E	3.1261
938511	AE1-070 1	9.7456
938521	AE1-070 2	8.9162
938851	AE1-113 C O1	8.4947
938852	AE1-113 E O1	30.1174
938861	AE1-114 C O1	4.1740
938862	AE1-114 E O1	14.2408
939051	AE1-134 1	1.4515
939061	AE1-134 2	1.4515
939321	AE1-163 C O1	6.2821
939322	AE1-163 E O1	38.5899
939351	AE1-166 C O1	12.5831
939352	AE1-166 E O1	11.6151
939401	AE1-172 C O1	7.0074
939402	AE1-172 E O1	32.8074
939731	**AE1-204 E (Withdrawn : 11/18/2019)**	**0.5851**
939741	AE1-205 C O1	10.8071
939742	AE1-205 E O1	14.9241
940101	AE1-252 C O1	14.0523
940102	AE1-252 E O1	9.3682
990901	L-005 E	13.4711
CHILHOWEE	CHILHOWEE	0.0328

© PJM Interconnection 2020. All rights reserved

Bus #	Bus	MW Impact
BLUEG	BLUEG	8.1212
CBM-W2	CBM-W2	72.5085
CBM-W1	CBM-W1	38.1156
WEC	WEC	9.9444
O-066	O-066	17.5526
CARR	CARR	0.9860
CHEOAH	CHEOAH	0.1136
CBM-S1	CBM-S1	1.8000
SANTEETLA	SANTEETLA	0.0359
G-007	G-007	2.7134
HAMLET	HAMLET	0.7521
MEC	MEC	47.4797
CANNELTON	CANNELTON	0.0953
GIBSON	GIBSON	0.0052
Z1-043	Z1-043	36.2076
CALDERWOOD	CALDERWOOD	0.1087
TRIMBLE	TRIMBLE	0.9678
CHOCTAW /* 35% REVERSE 4566958 4511400	CHOCTAW /* 35% REVERSE 4566958 4511400	0.0000
RENSSELAER	RENSSELAER	0.7794
CATAWBA	CATAWBA	0.3986

11.6.15 Index 15

ID	FROM BUS#	FROM BUS	FROM BUS AREA	TO BUS#	TO BUS	TO BUS AREA	CKT ID	CONT NAME	Type	Rating MVA	PRE PROJECT LOADING %	POST PROJECT LOADING %	AC|DC	MW IMPACT
688315	274702	KENDALL ;BU	CE	270810	LOCKPORT ; B	CE	1	COMED_P4_111-45-L11126_	breaker	1479.0	103.85	107.32	AC	51.76

Bus #	Bus	MW Impact
274658	DRESDEN ;2U	39.3447
274704	KENDALL ;1C	12.4463
274705	KENDALL ;1S	8.2998
274706	KENDALL ;2C	12.4463
274707	KENDALL ;2S	8.2998
274836	EQUISTAR ; R	2.2615
274879	MINONK ;1U	0.9554
290021	O50 E	27.6064
904211	W3-135	0.1995
927091	AC1-204 1	46.0172
927101	AC1-204 2	45.3106
930751	AB1-122 2O1	178.1982
934111	AD1-039 2	17.4634
936511	AD2-066 C O1	9.0042
936512	AD2-066 E O1	6.0028
937401	AD2-194 1	4.9485
937411	AD2-194 2	4.8725
938511	AE1-070 1	5.8145

© PJM Interconnection 2020. All rights reserved

Bus #	Bus	MW Impact
938521	AE1-070 2	5.2380
938851	AE1-113 C O1	11.3876
938852	AE1-113 E O1	40.3744
953201	J715 C	0.8628
953202	J715 E	4.6682
CHILHOWEE	CHILHOWEE	0.0295
BLUEG	BLUEG	0.9719
CBM-W2	CBM-W2	2.4759
TVA	TVA	0.1855
O-066	O-066	1.9622
CARR	CARR	0.1095
CHEOAH	CHEOAH	0.0836
SANTEETLA	SANTEETLA	0.0247
COTTONWOOD	COTTONWOOD	0.2415
G-007	G-007	0.3026
HAMLET	HAMLET	0.1294
UNIONPOWER	UNIONPOWER	0.0976
CANNELTON	CANNELTON	0.0332
GIBSON	GIBSON	0.0120
Z1-043	Z1-043	9.5758
CALDERWOOD	CALDERWOOD	0.0906
FARMERCITY	FARMERCITY	0.1736
TRIMBLE	TRIMBLE	0.1124
RENSSELAER	RENSSELAER	0.0866
CATAWBA	CATAWBA	0.0756
TATANKA	TATANKA	0.8089

11.6.16 Index 16

ID	FROM BUS#	FROM BUS	FROM BUS AREA	TO BUS#	TO BUS	TO BUS AREA	CKT ID	CONT NAME	Type	Rating MVA	PRE PROJECT LOADING %	POST PROJECT LOADING %	AC|DC	MW IMPACT
688069	274750	CRETE EC ;BP	CE	255112	17STJOHN	NIPS	1	COMED_P4_112-65-BT3-4__	breaker	1399.0	105.98	108.26	AC	38.65

Bus #	Bus	MW Impact
270859	PWR VTR EC;R	10.7312
274654	BRAIDWOOD;1U	24.4485
274655	BRAIDWOOD;2U	23.3919
274661	LASCO STA;2U	22.3729
274687	WILL CNTY;4U	10.1960
274704	KENDALL ;1C	3.5890
274705	KENDALL ;1S	2.3933
274706	KENDALL ;2C	3.5890
274707	KENDALL ;2S	2.3933
274722	S-055 E	10.0467
274751	CRETE EC ;1U	5.1952
274752	CRETE EC ;2U	5.1952
274753	CRETE EC ;3U	5.1952

© PJM Interconnection 2020. All rights reserved

Bus #	Bus	MW Impact
274754	CRETE EC ;4U	5.1952
274859	EASYR;U1 E	9.6990
274860	EASYR;U2 E	9.6990
274861	TOP CROP ;1U	0.4241
274862	TOP CROP ;2U	0.8233
274888	PILOT HIL;1E	14.4216
274890	CAYUG;1U E	6.9449
274891	CAYUG;2U E	6.9449
275149	KEMPTON ;1E	14.4216
290021	O50 E	17.5209
290051	GSG-6; E	9.2219
290108	LEEDK;1U E	21.4421
293061	N-015 E	13.8659
293516	O-009 E1	7.9476
293517	O-009 E2	4.0368
293518	O-009 E3	4.4456
293644	O22 E1	12.2555
293645	O22 E2	23.7901
293715	O-029 E	8.5893
293716	O-029 E	4.7094
293717	O-029 E	4.3284
294392	P-010 E	17.6097
294763	P-046 E	8.2865
295109	WESTBROOK E	4.9373
295111	SUBLETTE E	2.2822
914641	Y2-103	40.1870
915011	Y3-013 1	3.3489
915021	Y3-013 2	3.3489
915031	Y3-013 3	3.3489
916221	Z1-073 E	4.7583
916502	Z1-106 E1	1.3179
916504	Z1-106 E2	1.3179
916512	Z1-107 E	2.5308
916522	Z1-108 E	2.6022
918052	AA1-018 E	13.6471
919221	AA1-146	15.4829
919581	AA2-030	15.4829
920272	AA2-123 E	2.5522
924471	AB2-096	37.5594
925161	AB2-173	2.7613
925302	AB2-191 E	1.2212
926311	AC1-109 1	1.6857
926321	AC1-109 2	1.6857
926331	AC1-110 1	1.6872
926341	AC1-110 2	1.6872
926351	AC1-111 1	0.6737
926361	AC1-111 2	0.6737
926371	AC1-111 3	0.6737
926381	AC1-111 4	0.6737
926391	AC1-111 5	0.6737
926401	AC1-111 6	0.6737
926431	AC1-114	2.1068

© PJM Interconnection 2020. All rights reserved

Bus #	Bus	MW Impact
926821	AC1-168 C O1	1.0060
926822	AC1-168 E O1	6.7509
927091	AC1-204 1	66.1068
927101	AC1-204 2	65.9929
927451	AC1-142A 1	3.8260
927461	AC1-142A 2	3.8289
927511	AC1-113 1	1.0534
927521	AC1-113 2	1.0534
930481	AB1-089	58.2318
930501	AB1-091 O1	56.8200
930741	AB1-122 1O1	62.9901
930751	AB1-122 2O1	67.4035
932881	AC2-115 1	2.1068
932891	AC2-115 2	2.1068
932921	AC2-116	0.7374
933341	AC2-147 C	0.7692
933342	AC2-147 E	1.2550
933411	AC2-154 C	1.9574
933412	AC2-154 E	3.1936
933431	AC2-156 C O1	0.8426
933432	AC2-156 E O1	1.3748
933911	AD1-013 C	1.6237
933912	AD1-013 E	2.5937
933931	AD1-016 C	0.8244
933932	AD1-016 E	1.3450
934101	AD1-039 1	6.1730
934111	AD1-039 2	6.6055
934431	AD1-067 C	0.1158
934432	AD1-067 E	0.4869
934651	AD1-096 C	0.7879
934652	AD1-096 E	1.2855
934701	AD1-098 C O1	6.0680
934702	AD1-098 E O1	4.4303
934721	AD1-100 C	16.8122
934722	AD1-100 E	78.4567
934871	AD1-116 C	0.7948
934872	AD1-116 E	1.2967
934971	AD1-129 C	0.8013
934972	AD1-129 E	0.5342
935001	AD1-133 C O1	17.9484
935002	AD1-133 E O1	11.9656
936291	AD2-038 C O1	2.0251
936292	AD2-038 E O1	13.5528
936371	AD2-047 C O1	3.5027
936372	AD2-047 E O1	17.1013
936461	AD2-060	2.0604
936511	AD2-066 C O1	7.3412
936512	AD2-066 E O1	4.8941
936791	AD2-102 C	12.5195
936792	AD2-102 E	8.3463
937001	AD2-134 C	2.4107
937002	AD2-134 E	9.9588

© PJM Interconnection 2020. All rights reserved

Bus #	Bus	MW Impact
937311	AD2-172 C	2.1752
937312	AD2-172 E	3.0038
937321	AD2-175 C	12.7112
937322	AD2-175 E	8.4741
937401	AD2-194 1	7.1089
937411	AD2-194 2	7.0967
938511	AE1-070 1	8.3529
938521	AE1-070 2	7.6289
938851	AE1-113 C O1	7.2274
938852	AE1-113 E O1	25.6243
938861	AE1-114 C O1	3.4692
938862	AE1-114 E O1	11.8359
939051	AE1-134 1	1.2031
939061	AE1-134 2	1.2031
939321	AE1-163 C O1	5.0888
939322	AE1-163 E O1	31.2598
939351	AE1-166 C O1	8.9956
939352	AE1-166 E O1	8.3036
939401	AE1-172 C O1	4.4675
939402	AE1-172 E O1	20.9161
939631	AE1-193 C O1	32.4389
939632	AE1-193 E O1	217.0911
939641	AE1-194 C	32.4389
939642	AE1-194 E	217.0911
939651	AE1-195 C	32.4389
939652	AE1-195 E	217.0911
939681	AE1-198 C O1	96.3186
939682	AE1-198 E O1	81.8458
939731	**AE1-204 E (Withdrawn : 11/18/2019)**	**0.4931**
940101	AE1-252 C O1	8.9589
940102	AE1-252 E O1	5.9726
CHILHOWEE	CHILHOWEE	0.0507
BLUEG	BLUEG	7.5350
CBM-W2	CBM-W2	50.0839
CBM-W1	CBM-W1	25.9508
WEC	WEC	8.3484
O-066	O-066	14.2464
CARR	CARR	0.8034
CHEOAH	CHEOAH	0.1577
CBM-S1	CBM-S1	0.7986
SANTEETLA	SANTEETLA	0.0482
G-007	G-007	2.2027
HAMLET	HAMLET	0.6400
MEC	MEC	38.4014
CANNELTON	CANNELTON	0.1836
GIBSON	GIBSON	0.1126
Z1-043	Z1-043	29.3228
CALDERWOOD	CALDERWOOD	0.1611
TRIMBLE	TRIMBLE	0.8804
CHOCTAW /* 35% REVERSE 4566958 4511400	CHOCTAW /* 35% REVERSE 4566958 4511400	0.0000
RENSSELAER	RENSSELAER	0.6347
CATAWBA	CATAWBA	0.3451

© PJM Interconnection 2020. All rights reserved

11.6.17 Index 17

ID	FROM BUS#	FROM BUS	FROM BUS AREA	TO BUS#	TO BUS	TO BUS AREA	CKT ID	CONT NAME	Type	Rating MVA	PRE PROJECT LOADING %	POST PROJECT LOADING %	AC|DC	MW IMPACT
361770	274804	UNIV PK N;RP	CE	243229	05OLIVE	AEP	1	AEP_P4_#2978_05DUMONT 765_B	breaker	971.0	110.57	113.22	AC	29.25

Bus #	Bus	MW Impact
270859	PWR VTR EC;R	8.3147
274722	S-055 E	7.7670
274808	UNIV PK N;4U	1.4586
274809	UNIV PK N;5U	1.4586
274811	UNIV PK N;7U	1.4586
274812	UNIV PK N;8U	1.4586
274814	UNIV PK N;0U	1.4586
274815	UNIV PK N;XU	1.4586
274832	**U4-027 (Withdrawn : 05/29/2019)**	**7.3109**
274859	EASYR;U1 E	7.5096
274860	EASYR;U2 E	7.5096
274888	PILOT HIL;1E	12.6164
274890	CAYUG;1U E	9.0811
274891	CAYUG;2U E	9.0811
275149	KEMPTON ;1E	12.6164
290021	O50 E	13.2614
290051	GSG-6; E	7.1564
290108	LEEDK;1U E	16.6481
293061	N-015 E	10.7008
293516	O-009 E1	6.1610
293517	O-009 E2	3.1293
293518	O-009 E3	3.4462
293644	O22 E1	6.6905
293645	O22 E2	12.9874
293715	O-029 E	6.6546
293716	O-029 E	3.6486
293717	O-029 E	3.3535
293771	O-035 E	4.3220
294392	P-010 E	13.5900
294401	BSHIL;1U E	5.7759
294410	BSHIL;2U E	5.7759
294763	P-046 E	6.4192
295109	WESTBROOK E	3.8314
295111	SUBLETTE E	1.7680
910542	X3-005 E	0.4359
914641	Y2-103	31.0682
915011	Y3-013 1	2.5890
915021	Y3-013 2	2.5890
915031	Y3-013 3	2.5890
916211	Z1-072 E	3.2707
916221	Z1-073 E	3.6925

© PJM Interconnection 2020. All rights reserved

Bus #	Bus	MW Impact
916502	Z1-106 E1	1.0231
916504	Z1-106 E2	1.0232
916512	Z1-107 E	2.1712
916522	Z1-108 E	2.0160
917502	Z2-087 E	12.1470
918052	AA1-018 E	12.1385
919221	AA1-146	11.9865
919581	AA2-030	11.9865
919621	AA2-039 C	1.4079
919622	AA2-039 E	9.4220
920272	AA2-123 E	1.9774
924041	AB2-047 C O1	2.2688
924042	AB2-047 E O1	15.1838
924471	AB2-096	29.1014
925161	AB2-173	2.1377
925302	AB2-191 E	0.9476
925581	AC1-033 C	0.9459
925582	AC1-033 E	6.3326
926311	AC1-109 1	1.3168
926321	AC1-109 2	1.3168
926331	AC1-110 1	1.3057
926341	AC1-110 2	1.3057
926351	AC1-111 1	0.5263
926361	AC1-111 2	0.5263
926371	AC1-111 3	0.5263
926381	AC1-111 4	0.5263
926391	AC1-111 5	0.5263
926401	AC1-111 6	0.5263
926431	AC1-114	1.6322
926821	AC1-168 C O1	0.7819
926822	AC1-168 E O1	5.2469
927091	AC1-204 1	50.2428
927101	AC1-204 2	50.2808
927201	AC1-214 C O1	1.3871
927202	AC1-214 E O1	4.4096
927451	AC1-142A 1	2.9319
927461	AC1-142A 2	2.9305
927511	AC1-113 1	0.8161
927521	AC1-113 2	0.8161
930481	AB1-089	45.0997
930501	AB1-091 O1	48.5031
930741	AB1-122 1O1	49.4273
930751	AB1-122 2O1	50.6785
932881	AC2-115 1	1.6322
932891	AC2-115 2	1.6322
932921	AC2-116	0.5713
932931	AC2-117	8.8280
933341	AC2-147 C	0.5959
933342	AC2-147 E	0.9722
933411	AC2-154 C	1.7124
933412	AC2-154 E	2.7939
933431	AC2-156 C O1	0.6569

© PJM Interconnection 2020. All rights reserved

Bus #	Bus	MW Impact
933432	AC2-156 E O1	1.0717
933911	AD1-013 C	1.2600
933912	AD1-013 E	2.0128
933931	AD1-016 C	0.6387
933932	AD1-016 E	1.0421
934051	AD1-031 C O1	1.9207
934052	AD1-031 E O1	3.1338
934101	AD1-039 1	4.8439
934111	AD1-039 2	4.9665
934431	AD1-067 C	0.0899
934432	AD1-067 E	0.3778
934651	AD1-096 C	0.6104
934652	AD1-096 E	0.9959
934701	AD1-098 C O1	4.7086
934702	AD1-098 E O1	3.4378
934721	AD1-100 C	13.2281
934722	AD1-100 E	61.7312
934871	AD1-116 C	0.7069
934872	AD1-116 E	1.1534
934971	AD1-129 C	0.6208
934972	AD1-129 E	0.4139
935001	AD1-133 C O1	14.1525
935002	AD1-133 E O1	9.4350
936291	AD2-038 C O1	1.6732
936292	AD2-038 E O1	11.1979
936371	AD2-047 C O1	3.0643
936372	AD2-047 E O1	14.9608
936461	AD2-060	1.8025
936511	AD2-066 C O1	5.7959
936512	AD2-066 E O1	3.8639
936791	AD2-102 C	9.6971
936792	AD2-102 E	6.4648
937001	AD2-134 C	1.8708
937002	AD2-134 E	7.7282
937311	AD2-172 C	1.6850
937312	AD2-172 E	2.3270
937321	AD2-175 C	10.8450
937322	AD2-175 E	7.2300
937401	AD2-194 1	5.4029
937411	AD2-194 2	5.4070
937531	AD2-214 C	2.9995
937532	AD2-214 E	1.9996
938511	AE1-070 1	6.3485
938521	AE1-070 2	5.8125
938851	AE1-113 C O1	5.4703
938852	AE1-113 E O1	19.3947
938861	AE1-114 C O1	2.6874
938862	AE1-114 E O1	9.1688
939051	AE1-134 1	0.9314
939061	AE1-134 2	0.9314
939321	AE1-163 C O1	4.2046
939322	AE1-163 E O1	25.8281

© PJM Interconnection 2020. All rights reserved

Bus #	Bus	MW Impact
939351	AE1-166 C O1	7.0311
939352	AE1-166 E O1	6.4903
939401	AE1-172 C O1	3.5417
939402	AE1-172 E O1	16.5814
939731	**AE1-204 E (Withdrawn : 11/18/2019)**	**0.3811**
939741	AE1-205 C O1	5.8776
939742	AE1-205 E O1	8.1168
940101	AE1-252 C O1	7.1023
940102	AE1-252 E O1	4.7348
990901	L-005 E	8.4476
CHILHOWEE	CHILHOWEE	0.0157
BLUEG	BLUEG	4.4639
CBM-W2	CBM-W2	43.1514
CBM-W1	CBM-W1	21.9151
WEC	WEC	6.4558
O-066	O-066	10.9536
CARR	CARR	0.6189
CHEOAH	CHEOAH	0.0571
CBM-S1	CBM-S1	1.1689
SANTEETLA	SANTEETLA	0.0182
G-007	G-007	1.6931
HAMLET	HAMLET	0.4450
MEC	MEC	30.0300
CANNELTON	CANNELTON	0.0652
GIBSON	GIBSON	0.0267
Z1-043	Z1-043	22.8280
CALDERWOOD	CALDERWOOD	0.0530
TRIMBLE	TRIMBLE	0.5276
CHOCTAW /* 35% REVERSE 4566958 4511400	CHOCTAW /* 35% REVERSE 4566958 4511400	0.0000
RENSSELAER	RENSSELAER	0.4889
CATAWBA	CATAWBA	0.2335

11.6.18 Index 18

ID	FROM BUS#	FROM BUS	FROM BUS AREA	TO BUS#	TO BUS	TO BUS AREA	CKT ID	CONT NAME	Type	Rating MVA	PRE PROJECT LOADING %	POST PROJECT LOADING %	AC|DC	MW IMPACT
688081	275179	DRESDEN ;1M	CE	271337	DRESDEN ; R	CE	1	COMED_P4_012-45-BT5-6__	breaker	442.0	120.63	128.78	AC	36.61

Bus #	Bus	MW Impact
274658	DRESDEN ;2U	28.3894
274879	MINONK ;1U	0.6757
290021	O50 E	19.5248
916512	Z1-107 E	1.4912
930751	AB1-122 2O1	128.5355
934111	AD1-039 2	12.5965
938851	AE1-113 C O1	8.0540

© PJM Interconnection 2020. All rights reserved

Bus #	Bus	MW Impact
938852	AE1-113 E O1	28.5550
NEWTON	NEWTON	0.0235
CHILHOWEE	CHILHOWEE	0.0052
BLUEG	BLUEG	0.8918
CBM-W2	CBM-W2	3.3955
CBM-W1	CBM-W1	4.0414
WEC	WEC	1.0554
O-066	O-066	1.2768
CARR	CARR	0.0717
CHEOAH	CHEOAH	0.0160
CBM-S1	CBM-S1	0.0451
TILTON	TILTON	0.1613
SANTEETLA	SANTEETLA	0.0049
G-007	G-007	0.1976
HAMLET	HAMLET	0.0581
MEC	MEC	5.4100
CANNELTON	CANNELTON	0.0353
GIBSON	GIBSON	0.0308
CALDERWOOD	CALDERWOOD	0.0164
TRIMBLE	TRIMBLE	0.1018
RENSSELAER	RENSSELAER	0.0566
CATAWBA	CATAWBA	0.0315

11.6.19 Index 19

ID	FROM BUS#	FROM BUS	FROM BUS AREA	TO BUS#	TO BUS	TO BUS AREA	CKT ID	CONT NAME	Type	Rating MVA	PRE PROJECT LOADING %	POST PROJECT LOADING %	AC|DC	MW IMPACT
688038	275232	WILTON ;3M	CE	270644	WILTON ;	CE	1	COMED_P4_112-65-BT5-6__	breaker	1379.0	124.86	127.73	AC	44.48

Bus #	Bus	MW Impact
270859	PWR VTR EC;R	12.5749
274722	S-055 E	11.6785
274772	LINCOLN ;3U	3.0321
274773	LINCOLN ;4U	3.0321
274774	LINCOLN ;5U	3.0321
274775	LINCOLN ;6U	3.0321
274776	LINCOLN ;7U	3.0321
274777	LINCOLN ;8U	3.0321
274832	**U4-027 (Withdrawn : 05/29/2019)**	**11.3101**
274859	EASYR;U1 E	11.4305
274860	EASYR;U2 E	11.4305
274888	PILOT HIL;1E	20.0551
274890	CAYUG;1U E	17.2003
274891	CAYUG;2U E	17.2003
275149	KEMPTON ;1E	20.0551
290021	O50 E	20.1634
290051	GSG-6; E	10.8697

© PJM Interconnection 2020. All rights reserved

Bus #	Bus	MW Impact
290108	LEEDK;1U E	25.2535
290261	S-027 E	17.3255
290265	S-028 E	17.3255
293061	N-015 E	16.5118
293516	O-009 E1	9.4566
293517	O-009 E2	4.8032
293518	O-009 E3	5.2897
293644	O22 E1	10.6599
293645	O22 E2	20.6928
293715	O-029 E	10.1736
293716	O-029 E	5.5780
293717	O-029 E	5.1268
293771	O-035 E	6.7177
294392	P-010 E	20.9699
294401	BSHIL;1U E	8.9719
294410	BSHIL;2U E	8.9719
294763	P-046 E	9.7444
295109	WESTBROOK E	5.8195
295111	SUBLETTE E	2.6961
910542	X3-005 E	0.7603
914641	Y2-103	46.7140
915011	Y3-013 1	3.8928
915021	Y3-013 2	3.8928
915031	Y3-013 3	3.8928
916211	Z1-072 E	5.0837
916221	Z1-073 E	5.6086
916502	Z1-106 E1	1.5453
916504	Z1-106 E2	1.5453
916512	Z1-107 E	3.1642
916522	Z1-108 E	3.0410
917502	Z2-087 E	21.8715
918052	AA1-018 E	17.0924
919221	AA1-146	18.2907
919581	AA2-030	18.2907
919621	AA2-039 C	2.1869
919622	AA2-039 E	14.6354
920272	AA2-123 E	2.9882
924041	AB2-047 C O1	4.0852
924042	AB2-047 E O1	27.3393
924471	AB2-096	44.0121
925161	AB2-173	3.2620
925302	AB2-191 E	1.4394
925581	AC1-033 C	1.4693
925582	AC1-033 E	9.8362
926311	AC1-109 1	1.9882
926321	AC1-109 2	1.9882
926331	AC1-110 1	1.9741
926341	AC1-110 2	1.9741
926351	AC1-111 1	0.7940
926361	AC1-111 2	0.7940
926371	AC1-111 3	0.7940
926381	AC1-111 4	0.7940

© PJM Interconnection 2020. All rights reserved

Bus #	Bus	MW Impact
926391	AC1-111 5	0.7940
926401	AC1-111 6	0.7940
926431	AC1-114	2.4732
926821	AC1-168 C O1	1.2135
926822	AC1-168 E O1	8.1438
926841	AC1-171 C O1	1.0472
926842	AC1-171 E O1	6.9948
927091	AC1-204 1	75.5113
927101	AC1-204 2	75.5113
927201	AC1-214 C O1	2.1560
927202	AC1-214 E O1	6.8539
927451	AC1-142A 1	4.3504
927461	AC1-142A 2	4.3504
927511	AC1-113 1	1.2366
927521	AC1-113 2	1.2366
930481	AB1-089	68.3485
930501	AB1-091 O1	79.8022
930741	AB1-122 1O1	75.8735
930751	AB1-122 2O1	76.6849
932881	AC2-115 1	2.4732
932891	AC2-115 2	2.4732
932921	AC2-116	0.8656
932931	AC2-117	5.5397
933341	AC2-147 C	0.9072
933342	AC2-147 E	1.4801
933411	AC2-154 C	2.7218
933412	AC2-154 E	4.4408
933431	AC2-156 C O1	0.9948
933432	AC2-156 E O1	1.6232
933911	AD1-013 C	1.9136
933912	AD1-013 E	3.0568
933931	AD1-016 C	0.9652
933932	AD1-016 E	1.5748
934051	AD1-031 C O1	2.9832
934052	AD1-031 E O1	4.8673
934101	AD1-039 1	7.4356
934111	AD1-039 2	7.5151
934431	AD1-067 C	0.1365
934432	AD1-067 E	0.5739
934651	AD1-096 C	0.9269
934652	AD1-096 E	1.5123
934701	AD1-098 C O1	7.1533
934702	AD1-098 E O1	5.2227
934721	AD1-100 C	24.9989
934722	AD1-100 E	116.6617
934871	AD1-116 C	0.9954
934872	AD1-116 E	1.6241
934971	AD1-129 C	0.9395
934972	AD1-129 E	0.6263
935001	AD1-133 C O1	23.2805
935002	AD1-133 E O1	15.5203
936291	AD2-038 C O1	2.4471

© PJM Interconnection 2020. All rights reserved

Bus #	Bus	MW Impact
936292	AD2-038 E O1	16.3770
936371	AD2-047 C O1	4.8705
936372	AD2-047 E O1	23.7796
936461	AD2-060	2.8650
936511	AD2-066 C O1	8.7965
936512	AD2-066 E O1	5.8643
936791	AD2-102 C	14.6982
936792	AD2-102 E	9.7988
937001	AD2-134 C	2.8415
937002	AD2-134 E	11.7383
937311	AD2-172 C	2.5579
937312	AD2-172 E	3.5323
937321	AD2-175 C	17.8571
937322	AD2-175 E	11.9048
937401	AD2-194 1	8.1202
937411	AD2-194 2	8.1202
937531	AD2-214 C	4.5920
937532	AD2-214 E	3.0613
938511	AE1-070 1	9.5413
938521	AE1-070 2	8.7292
938851	AE1-113 C O1	8.3174
938852	AE1-113 E O1	29.4889
938861	AE1-114 C O1	4.0873
938862	AE1-114 E O1	13.9450
939051	AE1-134 1	1.4213
939061	AE1-134 2	1.4213
939321	AE1-163 C O1	6.1492
939322	AE1-163 E O1	37.7737
939351	AE1-166 C O1	12.3345
939352	AE1-166 E O1	11.3856
939401	AE1-172 C O1	6.8712
939402	AE1-172 E O1	32.1698
939731	**AE1-204 E (Withdrawn : 11/18/2019)**	**0.5729**
939741	AE1-205 C O1	10.5936
939742	AE1-205 E O1	14.6293
940101	AE1-252 C O1	13.7792
940102	AE1-252 E O1	9.1861
990901	L-005 E	13.1927
CHILHOWEE	CHILHOWEE	0.0320
BLUEG	BLUEG	7.9459
CBM-W2	CBM-W2	71.0465
CBM-W1	CBM-W1	37.3223
WEC	WEC	9.7369
O-066	O-066	17.1830
CARR	CARR	0.9654
CHEOAH	CHEOAH	0.1106
CBM-S1	CBM-S1	1.7678
SANTEETLA	SANTEETLA	0.0350
G-007	G-007	2.6572
HAMLET	HAMLET	0.7354
MEC	MEC	46.5003
CANNELTON	CANNELTON	0.0929

© PJM Interconnection 2020. All rights reserved

Bus #	Bus	MW Impact
GIBSON	GIBSON	0.0048
Z1-043	Z1-043	35.4614
CALDERWOOD	CALDERWOOD	0.1054
TRIMBLE	TRIMBLE	0.9466
CHOCTAW /* 35% REVERSE 4566958 4511400	CHOCTAW /* 35% REVERSE 4566958 4511400	0.0000
RENSSELAER	RENSSELAER	0.7629
CATAWBA	CATAWBA	0.3899

11.6.20 Index 20

ID	FROM BUS#	FROM BUS	FROM BUS AREA	TO BUS#	TO BUS	TO BUS AREA	CKT ID	CONT NAME	Type	Rating MVA	PRE PROJECT LOADING %	POST PROJECT LOADING %	AC|DC	MW IMPACT
688041	275233	WILTON ;4M	CE	270644	WILTON ;	CE	1	COMED_P4_112-65-BT2-3__	breaker	1379.0	127.43	130.36	AC	45.43

Bus #	Bus	MW Impact
270859	PWR VTR EC;R	12.8426
274722	S-055 E	11.9271
274772	LINCOLN ;3U	3.1139
274773	LINCOLN ;4U	3.1139
274774	LINCOLN ;5U	3.1139
274775	LINCOLN ;6U	3.1139
274776	LINCOLN ;7U	3.1139
274777	LINCOLN ;8U	3.1139
274832	**U4-027 (Withdrawn : 05/29/2019)**	**11.5489**
274859	EASYR;U1 E	11.6729
274860	EASYR;U2 E	11.6729
274888	PILOT HIL;1E	20.4728
274890	CAYUG;1U E	17.5430
274891	CAYUG;2U E	17.5430
275149	KEMPTON ;1E	20.4728
290021	O50 E	20.5931
290051	GSG-6; E	11.1005
290108	LEEDK;1U E	25.7907
290261	S-027 E	17.6769
290265	S-028 E	17.6769
293061	N-015 E	16.8565
293516	O-009 E1	9.6568
293517	O-009 E2	4.9049
293518	O-009 E3	5.4016
293644	O22 E1	10.8854
293645	O22 E2	21.1304
293715	O-029 E	10.3890
293716	O-029 E	5.6961
293717	O-029 E	5.2354
293771	O-035 E	6.8591
294392	P-010 E	21.4078

© PJM Interconnection 2020. All rights reserved

Bus #	Bus	MW Impact
294401	BSHIL;1U E	9.1610
294410	BSHIL;2U E	9.1610
294763	P-046 E	9.9518
295109	WESTBROOK E	5.9431
295111	SUBLETTE E	2.7533
910542	X3-005 E	0.7769
914641	Y2-103	47.7085
915011	Y3-013 1	3.9757
915021	Y3-013 2	3.9757
915031	Y3-013 3	3.9757
916211	Z1-072 E	5.1907
916221	Z1-073 E	5.7277
916502	Z1-106 E1	1.5782
916504	Z1-106 E2	1.5782
916512	Z1-107 E	3.2314
916522	Z1-108 E	3.1058
917502	Z2-087 E	22.3137
918052	AA1-018 E	17.4651
919221	AA1-146	18.6790
919581	AA2-030	18.6790
919621	AA2-039 C	2.2330
919622	AA2-039 E	14.9438
920272	AA2-123 E	3.0520
924041	AB2-047 C O1	4.1678
924042	AB2-047 E O1	27.8921
924471	AB2-096	44.9493
925161	AB2-173	3.3313
925302	AB2-191 E	1.4699
925581	AC1-033 C	1.5002
925582	AC1-033 E	10.0434
926311	AC1-109 1	2.0306
926321	AC1-109 2	2.0306
926331	AC1-110 1	2.0162
926341	AC1-110 2	2.0162
926351	AC1-111 1	0.8109
926361	AC1-111 2	0.8109
926371	AC1-111 3	0.8109
926381	AC1-111 4	0.8109
926391	AC1-111 5	0.8109
926401	AC1-111 6	0.8109
926431	AC1-114	2.5257
926821	AC1-168 C O1	1.2390
926822	AC1-168 E O1	8.3149
926841	AC1-171 C O1	1.0691
926842	AC1-171 E O1	7.1410
927091	AC1-204 1	77.1285
927101	AC1-204 2	77.1285
927201	AC1-214 C O1	2.2014
927202	AC1-214 E O1	6.9982
927451	AC1-142A 1	4.4439
927461	AC1-142A 2	4.4439
927511	AC1-113 1	1.2628

© PJM Interconnection 2020. All rights reserved

Bus #	Bus	MW Impact
927521	AC1-113 2	1.2628
930481	AB1-089	69.8024
930501	AB1-091 O1	81.4572
930741	AB1-122 1O1	77.4815
930751	AB1-122 2O1	78.3222
932881	AC2-115 1	2.5257
932891	AC2-115 2	2.5257
932921	AC2-116	0.8840
932931	AC2-117	5.6601
933341	AC2-147 C	0.9264
933342	AC2-147 E	1.5115
933411	AC2-154 C	2.7784
933412	AC2-154 E	4.5333
933431	AC2-156 C O1	1.0160
933432	AC2-156 E O1	1.6576
933911	AD1-013 C	1.9543
933912	AD1-013 E	3.1219
933931	AD1-016 C	0.9857
933932	AD1-016 E	1.6083
934051	AD1-031 C O1	3.0462
934052	AD1-031 E O1	4.9702
934101	AD1-039 1	7.5932
934111	AD1-039 2	7.6756
934431	AD1-067 C	0.1394
934432	AD1-067 E	0.5861
934651	AD1-096 C	0.9466
934652	AD1-096 E	1.5444
934701	AD1-098 C O1	7.3056
934702	AD1-098 E O1	5.3339
934721	AD1-100 C	25.4949
934722	AD1-100 E	118.9762
934871	AD1-116 C	1.0171
934872	AD1-116 E	1.6595
934971	AD1-129 C	0.9595
934972	AD1-129 E	0.6397
935001	AD1-133 C O1	23.7624
935002	AD1-133 E O1	15.8416
936291	AD2-038 C O1	2.5000
936292	AD2-038 E O1	16.7308
936371	AD2-047 C O1	4.9720
936372	AD2-047 E O1	24.2748
936461	AD2-060	2.9247
936511	AD2-066 C O1	8.9829
936512	AD2-066 E O1	5.9886
936791	AD2-102 C	15.0103
936792	AD2-102 E	10.0069
937001	AD2-134 C	2.9018
937002	AD2-134 E	11.9875
937311	AD2-172 C	2.6123
937312	AD2-172 E	3.6075
937321	AD2-175 C	18.2272
937322	AD2-175 E	12.1515

© PJM Interconnection 2020. All rights reserved

Bus #	Bus	MW Impact
937401	AD2-194 1	8.2941
937411	AD2-194 2	8.2941
937531	AD2-214 C	4.6891
937532	AD2-214 E	3.1261
938511	AE1-070 1	9.7456
938521	AE1-070 2	8.9162
938851	AE1-113 C O1	8.4947
938852	AE1-113 E O1	30.1174
938861	AE1-114 C O1	4.1740
938862	AE1-114 E O1	14.2408
939051	AE1-134 1	1.4515
939061	AE1-134 2	1.4515
939321	AE1-163 C O1	6.2821
939322	AE1-163 E O1	38.5899
939351	AE1-166 C O1	12.5831
939352	AE1-166 E O1	11.6151
939401	AE1-172 C O1	7.0074
939402	AE1-172 E O1	32.8074
939731	**AE1-204 E (Withdrawn : 11/18/2019)**	**0.5851**
939741	AE1-205 C O1	10.8071
939742	AE1-205 E O1	14.9241
940101	AE1-252 C O1	14.0523
940102	AE1-252 E O1	9.3682
990901	L-005 E	13.4711
CHILHOWEE	CHILHOWEE	0.0328
BLUEG	BLUEG	8.1212
CBM-W2	CBM-W2	72.5085
CBM-W1	CBM-W1	38.1156
WEC	WEC	9.9444
O-066	O-066	17.5526
CARR	CARR	0.9860
CHEOAH	CHEOAH	0.1136
CBM-S1	CBM-S1	1.8000
SANTEETLA	SANTEETLA	0.0359
G-007	G-007	2.7134
HAMLET	HAMLET	0.7521
MEC	MEC	47.4797
CANNELTON	CANNELTON	0.0953
GIBSON	GIBSON	0.0052
Z1-043	Z1-043	36.2076
CALDERWOOD	CALDERWOOD	0.1087
TRIMBLE	TRIMBLE	0.9678
CHOCTAW /* 35% REVERSE 4566958 4511400	CHOCTAW /* 35% REVERSE 4566958 4511400	0.0000
RENSSELAER	RENSSELAER	0.7794
CATAWBA	CATAWBA	0.3986

11.6.21 Index 21

© PJM Interconnection 2020. All rights reserved

ID	FROM BUS#	FROM BUS	FROM BUS AREA	TO BUS#	TO BUS	TO BUS AREA	CKT ID	CONT NAME	Type	Rating MVA	PRE PROJECT LOADING %	POST PROJECT LOADING %	AC|DC	MW IMPACT
689257	930740	AB1-122 TAP	CE	270717	DRESDEN ; R	CE	1	COMED_P7_345-L19601_B-S_+_345-L9801__R-S_FSA	tower	1195.0	119.82	122.87	AC	36.44

Bus #	Bus	MW Impact
274677	POWERTON ;5U	23.6879
274678	POWERTON ;6U	23.7550
274832	**U4-027 (Withdrawn : 05/29/2019)**	**5.6593**
274861	TOP CROP ;1U	0.6280
274862	TOP CROP ;2U	1.2190
274879	MINONK ;1U	0.6726
290021	O50 E	19.4336
293644	O22 E1	18.1454
293645	O22 E2	35.2234
293771	O-035 E	3.5526
294401	BSHIL;1U E	5.2782
294410	BSHIL;2U E	5.2782
916211	Z1-072 E	2.6884
918051	AA1-018 C	0.6020
918052	AA1-018 E	29.1015
919621	AA2-039 C	1.2866
919622	AA2-039 E	8.6100
925581	AC1-033 C	0.8647
925582	AC1-033 E	5.7892
926841	AC1-171 C O1	0.7201
926842	AC1-171 E O1	4.8100
927201	AC1-214 C O1	1.1402
927202	AC1-214 E O1	3.6246
930741	AB1-122 1O1	524.8025
934051	AD1-031 C O1	1.7536
934052	AD1-031 E O1	2.8612
934101	AD1-039 1	51.4306
934871	AD1-116 C	1.6948
934872	AD1-116 E	2.7652
936291	AD2-038 C O1	4.3499
936292	AD2-038 E O1	29.1106
938851	AE1-113 C O1	8.0164
938852	AE1-113 E O1	28.4216
939321	AE1-163 C O1	10.9304
939322	AE1-163 E O1	67.1441
951631	J456 C	1.7403
951632	J456 E	9.4152
953951	J859	10.6652
954702	J844 E	27.3000
990901	L-005 E	8.0152
LGEE	LGEE	0.1215
CIN	CIN	0.9971
CPLE	CPLE	0.2104
IPL	IPL	0.4898

© PJM Interconnection 2020. All rights reserved

Bus #	Bus	MW Impact
CBM-W2	CBM-W2	48.7870
CBM-W1	CBM-W1	6.5948
O-066	O-066	0.6653
CBM-S2	CBM-S2	0.7298
CARR	CARR	0.0430
CBM-S1	CBM-S1	3.2361
G-007	G-007	0.1019
MEC	MEC	20.1894
Z1-043	Z1-043	18.2026
CHOCTAW /* 35% REVERSE 4566958 4511400	CHOCTAW /* 35% REVERSE 4566958 4511400	0.0000
RENSSELAER	RENSSELAER	0.0340

11.7 Queue Dependencies

The Queue Projects below are listed in one or more indices for the overloads identified in your report. These projects contribute to the loading of the overloaded facilities identified in your report. The percent overload of a facility and cost allocation you may have towards a particular reinforcement could vary depending on the action of these earlier projects. The status of each project at the time of the analysis is presented in the table. This list may change as earlier projects withdraw or modify their requests.

Queue Number	Project Name	Status
N-015	N/A	N/A
AE1-252	Loretto-Wilton Center	Active
AE1-134	Nelson 345 kV	Active
AE1-134	Nelson 345 kV	Active
AE1-205	McLean 345 kV	Active
AB1-122	Kendall-Tazewell & Dresden-Mole Creek	Active
AD2-066	Mazon-Crescent Ridge	Active
AB2-047	Brokaw-Pontiac Midpoint	Active
AE1-198	Crete 345 kV	Active
AE1-113	Mole Creek 345 kV	Active
AC1-168	Kewanee-Streator	Active
AC1-110	Aurora 138kV	Active
P-010	N/A	N/A
AE1-080A	PJM-MECS	Withdrawn
AE1-163	Powerton-Goodings Grove 345 kV	Active
AD1-116	Nevada 345 kV	Active
AD2-194	Elwood	Active
AD1-016	Marengo	Active
AD1-016	Marengo	Active
AD2-172	Lena 138kV	Active
AD2-038	Powerton	Active
U4-027	Normandy-Kewanee 138kV	Withdrawn
AE1-205	McLean 345 kV	Active
AC2-116	Rockford II	Active
AC2-117	University Park North	Engineering and Procurement
AD2-066	Mazon-Crescent Ridge	Active
AD1-031	Kewanee 138 kV	Active
Z1-107	Joliet 34kV	In Service
O-029	N/A	N/A

© PJM Interconnection 2020. All rights reserved

Queue Number	Project Name	Status
AE1-166	Loretto-Wilton & Braidwood-Davis Creek	Active
AA2-039	Kewanee 138 kV	Active
AE1-114	Maryland-Lancaster 138 kV	Active
S-055	N/A	N/A
AD1-133	Pontiac MidPoint-Dresden	Active
AD1-133	Pontiac MidPoint-Dresden	Active
AD2-214	Rock Falls-Garden Plains	Active
AD2-214	Rock Falls-Garden Plains	Active
W3-135	Goose Lake 34.5kV	Under Construction
AC1-113	Rockford	Active
AC1-113	Rockford	Active
AA2-123	Marengo 34kV	In Service
AD2-060	Davis Creek 138kV	Active
AC1-171	Powerton	Active
AD1-116	Nevada 345 kV	Active
AC1-033	Kewanee	Active
AC1-214	Crescent Ridge	Active
GSG-6	N/A	N/A
O-009	N/A	N/A
AC1-109	Aurora 345kV	Active
Z2-087	Pontiac MidPoint-Brokaw 345kV	Under Construction
AE1-195	Crete 345 kV	Active
AE1-163	Powerton-Goodings Grove 345 kV	Active
AE1-193	Crete 345 kV	Active
AD1-100	Wilton Center-Loretto	Active
AE1-198	Crete 345 kV	Active
AC2-156	Sandwich 34.5kV	Active
AC1-111	Aurora 138kV	Active
AC1-111	Aurora 138kV	Active
AC1-111	Aurora 138kV	Active
AC1-111	Aurora 138kV	Active
AC1-111	Aurora 138kV	Active
AC1-111	Aurora 138kV	Active
AC1-171	Powerton	Active
Z1-043	AMIL-PJM	Withdrawn
AE1-172	Loretto-Wilton Center	Active
AE1-172	Loretto-Wilton Center	Active
AD1-013	Twombly Road 138kV	Active
AA2-030	Nelson	Active
AD2-172	Lena 138kV	Active
AC1-204	Elwood	Engineering and Procurement
AC1-204	Elwood	Engineering and Procurement
X3-005	Wildwood 12kV	In Service
AB2-047	Brokaw-Pontiac Midpoint	Active
AE1-204	Waukegan 13 kV	Withdrawn
AC1-109	Aurora 345kV	Active
AD2-047	Davis Creek 138 kV	Active
AC2-147	Maryland	Active
AE1-193	Crete 345 kV	Active
AA2-039	Kewanee 138 kV	Active
S-028	N/A	N/A
AC2-147	Maryland	Active

© PJM Interconnection 2020. All rights reserved

Queue Number	Project Name	Status
AD2-038	Powerton	Active
AB2-191	Mendota Hills	In Service
AB1-091	Davis Creek 345kV	Active
AD2-134	Shady Oaks	Active
S-027	N/A	N/A
AD2-134	Shady Oaks	Active
AE1-195	Crete 345 kV	Active
AD1-031	Kewanee 138 kV	Active
Z1-106	West Chicago 34kV	In Service
Y2-103	Zion Energy Center	Active
O-066	N/A	N/A
AD2-175	Davis Creek 345 kV	Active
AB2-096	Silver Lake-Cherry Valley	Active
AD2-175	Davis Creek 345 kV	Active
AE1-198	Crete 345 kV	Active
AC1-110	Aurora 138kV	Active
AD1-129	Belvidere 34 kV	Active
Z1-072	Crescent Ridge	In Service
AA1-018	Powerton-Goodings Grove	Under Construction
AD1-096	Stillman Valley 34 kV	Active
AE1-114	Maryland-Lancaster 138 kV	Active
AD1-096	Stillman Valley 34 kV	Active
AE1-194	Crete 345 kV	Active
Z1-106	West Chicago 34kV	In Service
O-009	N/A	N/A
O-009	N/A	N/A
AE1-070	Elwood 345 kV	Active
AE1-070	Elwood 345 kV	Active
AD1-100	Wilton Center-Loretto	Active
AB1-122	Kendall-Tazewell & Dresden-Mole Creek	Active
AB1-089	Byron-Wayne 345kV #1	Active
AD1-098	Dixon-McGirr	Active
AA1-018	Powerton-Goodings Grove	Under Construction
AD2-102	Wempletown 345 kV	Active
AD2-102	Wempletown 345 kV	Active
O-035	N/A	N/A
AE1-113	Mole Creek 345 kV	Active
AE1-194	Crete 345 kV	Active
AE1-042	TVA-PJM	Withdrawn
AC2-156	Sandwich 34.5kV	Active
AC1-033	Kewanee	Active
AC1-168	Kewanee-Streator	Active
L-005	N/A	N/A
AD2-047	Davis Creek 138 kV	Active
AE1-252	Loretto-Wilton Center	Active
AC1-114	Rockford II	Active
Z1-108	McHenry 34kV	In Service
AD1-039	Kendall-Tazewell & Dresden-Mole Creek	Active
AD1-039	Kendall-Tazewell & Dresden-Mole Creek	Active
AD1-013	Twombly Road 138kV	Active
AC1-142A	Joliet	Active
AC1-142A	Joliet	Active

© PJM Interconnection 2020. All rights reserved

Queue Number	Project Name	Status
AD2-194	Elwood	Active
AE1-166	Loretto-Wilton & Braidwood-Davis Creek	Active
Y3-013	Zion Energy Center	Active
Y3-013	Zion Energy Center	Active
Y3-013	Zion Energy Center	Active
G-007	N/A	N/A
AA1-146	Nelson	Active
AD1-067	Mendota Hills	Active
AD1-098	Dixon-McGirr	Active
AD1-067	Mendota Hills	Active
AD1-129	Belvidere 34 kV	Active
AC2-154	Davis Creek 138kV	Active
AC1-214	Crescent Ridge	Active
Z1-073	Mendota Hills	In Service
AC2-154	Davis Creek 138kV	Active
AB2-173	Nelson 345kV	Active
AC2-115	Rockford	Active
AC2-115	Rockford	Active
P-046	N/A	N/A

11.8 Contingency Descriptions

Contingency Name	Contingency Definition
COMED_P4_111-45-L16704T	CONTINGENCY 'COMED_P4_111-45-L16704T' TRIP BRANCH FROM BUS 270846 TO BUS 270730 CKT 1 / PLANO ; B 345 ELEC JUNC; B 345 TRIP BRANCH FROM BUS 272250 TO BUS 272278 CKT 1 / PLANO ; B 138 PLANO;1I 138 TRIP BRANCH FROM BUS 272250 TO BUS 272278 CKT 2 / PLANO ; B 138 PLANO;1I 138 TRIP BRANCH FROM BUS 270846 TO BUS 272278 TO BUS 275354 CKT 1 / PLANO ; B 345 PLANO;1I 138 PLANO;1C 34.5 TRIP BRANCH FROM BUS 270730 TO BUS 270916 CKT 1 / ELEC JUNC; B 345 WAYNE ; B 345 TRIP BRANCH FROM BUS 270730 TO BUS 270928 CKT 1 / ELEC JUNC; B 345 WOLFS ; B 345 TRIP BRANCH FROM BUS 270928 TO BUS 272794 TO BUS 275334 CKT 1 / WOLFS ; B 345 WOLFS ; B 138 WOLFS ;1C 34.5 DISCONNECT BUS 275239 / ELEC JUNC;2M 138 END
COMED_P7_345-L19601_B-S_+_345-L9801__R-S_FSA	CONTINGENCY 'COMED_P7_345-L19601_B-S_+_345-L9801__R-S_FSA' TRIP BRANCH FROM BUS 270790 TO BUS 270770 CKT 1 / KATYD; B 345 GOODI;4B 345 TRIP BRANCH FROM BUS 918050 TO BUS 270769 CKT 1 / AA1-018 GOODINGS ;2R 345 END
COMED_P1-2_345-L11620_B-S	CONTINGENCY 'COMED_P1-2_345-L11620_B-S' TRIP BRANCH FROM BUS 270736 TO BUS 270770 CKT 1 / ELWOO; B 345 GOODI;3B 345 END
COMED_P4_112-65-BT3-4__	CONTINGENCY 'COMED_P4_112-65-BT3-4__' TRIP BRANCH FROM BUS 270644 TO BUS 243206 CKT 1 / WILTO; 765 05DUMONT 765 TRIP BRANCH FROM BUS 275232 TO BUS 270644 CKT 1 / WILTO;3M 345 WILTO; 765 TRIP BRANCH FROM BUS 275232 TO BUS 270926 CKT 1 / WILTO;3M 345 WILTO; B 345 TRIP BRANCH FROM BUS 275232 TO BUS 275332 CKT 1 / WILTO;3M 345 WILTO;3C 33 END

© PJM Interconnection 2020. All rights reserved

Contingency Name	Contingency Definition
COMED_P4_012-45-BT5-6__	CONTINGENCY 'COMED_P4_012-45-BT5-6__' TRIP BRANCH FROM BUS 270716 TO BUS 270736 CKT 1 / DRESD; B 345 ELWOO; B 345 TRIP BRANCH FROM BUS 270736 TO BUS 270737 CKT 1 / ELWOO; B 345 ELWOO; R 345 TRIP BRANCH FROM BUS 274702 TO BUS 270716 CKT 1 / KEND
COMED_P4_023-65-BT2-3__	CONTINGENCY 'COMED_P4_023-65-BT2-3__' TRIP BRANCH FROM BUS 270644 TO BUS 243206 CKT 1 / WILTO; 765 05DUMONT 765 TRIP BRANCH FROM BUS 270607 TO BUS 270630 CKT 1 / COLLI; 765 PLANO; 765 END
COMED_P4_116-45-TR82___	CONTINGENCY 'COMED_P4_116-45-TR82___' TRIP BRANCH FROM BUS 270769 TO BUS 271565 TO BUS 275324 CKT 1 / GOODINGS ;2R 345 GOODINGS ; R 138 GOODINGS ;2C 34.5 DISCONNECT BUS 270769 / GOODINGS ;2R 345 END
COMED_P4_112-45-BT4-5__	CONTINGENCY 'COMED_P4_112-45-BT4-5__' TRIP BRANCH FROM BUS 270666 TO BUS 270664 CKT 1 / B ISL;BT 345 B ISL; B 345 TRIP BRANCH FROM BUS 270666 TO BUS 270926 CKT 1 / B ISL;BT 345 WILTO; B 345 TRIP BRANCH FROM BUS 270770 TO BUS 270666 CKT 1 / GOODI;4B 345 B ISL;BT 345 TRIP BRANCH FROM BUS 270852 TO BUS 270704 CKT 1 / PONTI; B 345 LORET; B 345 END
COMED_P7_345-L94507_B-S_+_345-L97008_R-S	CONTINGENCY 'COMED_P7_345-L94507_B-S_+_345-L97008_R-S' TRIP BRANCH FROM BUS 274750 TO BUS 255112 CKT 1 / CRETE;BP 345 17STJOHN 345 TRIP BRANCH FROM BUS 274804 TO BUS 243229 CKT 1 / UPNOR;RP 345 05OLIVE 345 END
COMED_P4_116-45-L11617_	CONTINGENCY 'COMED_P4_116-45-L11617_' TRIP BRANCH FROM BUS 270770 TO BUS 270810 CKT 1 / GOODI;4B 345 LOCKP; B 345 DISCONNECT BUS 270770 / GOODI;4B 345 END
COMED_P7_345-L11620_B-S_+_345-L11622_R-S	CONTINGENCY 'COMED_P7_345-L11620_B-S_+_345-L11622_R-S' TRIP BRANCH FROM BUS 270736 TO BUS 270770 CKT 1 / ELWOO; B 345 GOODI;3B 345 TRIP BRANCH FROM BUS 270737 TO BUS 270769 CKT 1 / ELWOO; R 345 GOODI;1R 345 END
COMED_P2-2_116_GG-345R__2_NO_FSA	CONTINGENCY 'COMED_P2-2_116_GG-345R__2_NO_FSA' DISCONNECT BUS 270769 / GOODI;2R 345 END
COMED_P1-2_345-L2311__R-S	CONTINGENCY 'COMED_P1-2_345-L2311__R-S' TRIP BRANCH FROM BUS 270697 TO BUS 270717 CKT 1 / COLLI; R 345 *DRESD; R 345* END
COMED_P4_116-45-TR84___	CONTINGENCY 'COMED_P4_116-45-TR84___' TRIP BRANCH FROM BUS 270770 TO BUS 271564 TO BUS 275368 CKT 1 / GOODINGS ;4B 345 GOODINGS ; B 138 GOODINGS ;4C 34.5 DISCONNECT BUS 270770 / GOODINGS ;4B 345 END

© PJM Interconnection 2020. All rights reserved

Contingency Name	Contingency Definition
COMED_P1-2_345-L1202__B-S-A	CONTINGENCY 'COMED_P1-2_345-L1202__B-S-A' TRIP BRANCH FROM BUS 270716 TO BUS 930750 CKT 1 / DRESDEN ; B 345 AB1-122 TAP 345 END
COMED_P4_112-65-BT4-5__	CONTINGENCY 'COMED_P4_112-65-BT4-5__' TRIP BRANCH FROM BUS 270644 TO BUS 243206 CKT 1 / WILTO; 765 05DUMONT 765 TRIP BRANCH FROM BUS 275233 TO BUS 270644 CKT 1 / WILTO;4M 345 WILTO; 765 TRIP BRANCH FROM BUS 275233 TO BUS 270927 CKT 1 / WILTO;4M 345 WILTO; R 345 TRIP BRANCH FROM BUS 275233 TO BUS 275333 CKT 1 / WILTO;4M 345 WILTO;4C 33 END
COMED_P4_023-65-BT4-5__	CONTINGENCY 'COMED_P4_023-65-BT4-5__' TRIP BRANCH FROM BUS 275168 TO BUS 270607 CKT 1 / COLLI;2M 345 COLLI; 765 TRIP BRANCH FROM BUS 275168 TO BUS 270697 CKT 1 / COLLI;2M 345 COLLI; R 345 TRIP BRANCH FROM BUS 275168 TO BUS 275268 CKT 1 / COLLI;2M 345 COLLI;2C 33 TRIP BRANCH FROM BUS 270644 TO BUS 243206 CKT 1 / WILTO; 765 05DUMONT 765 END
COMED_P7_345-L0301__B-S_+_345-L9801__R-S_FSA	CONTINGENCY 'COMED_P7_345-L0301__B-S_+_345-L9801__R-S_FSA' TRIP BRANCH FROM BUS 270854 TO BUS 270790 CKT 1 / POWER; B 345 KATYDID TRIP BRANCH FROM BUS 918050 TO BUS 270769 CKT 1 / AA1-018 GOODINGS ;2R 345 END
COMED_P1-2_345-L1221__B-S	CONTINGENCY 'COMED_P1-2_345-L1221__B-S' TRIP BRANCH FROM BUS 270716 TO BUS 270928 CKT 1 / DRESD; B 345 WOLFS; B 345 END
COMED_P1-2_345-L11613AB-S	CONTINGENCY 'COMED_P1-2_345-L11613AB-S' TRIP BRANCH FROM BUS 270666 TO BUS 270664 CKT 1 / B ISL;BT 345 B ISL; B 345 TRIP BRANCH FROM BUS 270666 TO BUS 270926 CKT 1 / B ISL;BT 345 WILTO; B 345 TRIP BRANCH FROM BUS 270770 TO BUS 270666 CKT 1 / GOODI;4B 345 B ISL;BT 345 END
COMED_P4_116-45-L9801_FSA	CONTINGENCY 'COMED_P4_116-45-L9801_FSA' TRIP BRANCH FROM BUS 918050 TO BUS 270769 CKT 1 / AA1-018 GOODINGS ;2R 345 DISCONNECT BUS 270769 / GOODI;2R 345 END
COMED_P2-2_116_GG-345B__4	CONTINGENCY 'COMED_P2-2_116_GG-345B__4' DISCONNECT BUS 270770 / GOODI;4B 345 END
COMED_P4_116-45-L11614_	CONTINGENCY 'COMED_P4_116-45-L11614_' TRIP BRANCH FROM BUS 270667 TO BUS 270665 CKT 1 / B ISL;RT 345 B ISL; R 345 TRIP BRANCH FROM BUS 270667 TO BUS 270927 CKT 1 / B ISL;RT 345 WILTO; R 345 TRIP BRANCH FROM BUS 270769 TO BUS 270667 CKT 1 / GOODI;2R 345 B ISL;RT 345 DISCONNECT BUS 270769 / GOODI;2R 345 END

© PJM Interconnection 2020. All rights reserved

Contingency Name	Contingency Definition
COMED_P2-2_116_GG-345R__2_FSA	CONTINGENCY 'COMED_P2-2_116_GG-345R__2_FSA' DISCONNECT BUS 270769 / GOODI;2R 345 DISCONNECT BUS 918050 / AA1-018 TAP /ADDED FOR NO FSA CASE END
Base Case	
COMED_P4_116-45-L11613_	CONTINGENCY 'COMED_P4_116-45-L11613_' TRIP BRANCH FROM BUS 270666 TO BUS 270664 CKT 1 / B ISL;BT 345 B ISL; B 345 TRIP BRANCH FROM BUS 270666 TO BUS 270926 CKT 1 / B ISL;BT 345 WILTO; B 345 TRIP BRANCH FROM BUS 270770 TO BUS 270666 CKT 1 / GOODI;4B 345 B ISL;BT 345 DISCONNECT BUS 270770 / GOODI;4B 345 END
COMED_P4_111-45-L11126_	CONTINGENCY 'COMED_P4_111-45-L11126_' TRIP BRANCH FROM BUS 270730 TO BUS 270916 CKT 1 / ELEC JUNC; B 345 WAYNE ; B 345 TRIP BRANCH FROM BUS 270916 TO BUS 270917 CKT 1 / WAYNE ; B 345 WAYNE ; R 345 TRIP BRANCH FROM BUS 270730 TO BUS 270846 CKT 1 / ELEC JUNC; B 345 PLANO ; B 345 TRIP BRANCH FROM BUS 270730 TO BUS 270928 CKT 1 / ELEC JUNC; B 345 WOLFS ; B 345 TRIP BRANCH FROM BUS 270928 TO BUS 272794 TO BUS 275334 CKT 1 / WOLFS ; B 345 WOLFS ; B 138 WOLFS ;1C 34.5 DISCONNECT BUS 275239 / ELEC JUNC;2M 138 END
COMED_P1-2_345-L10805_B-S	CONTINGENCY 'COMED_P1-2_345-L10805_B-S' TRIP BRANCH FROM BUS 270810 TO BUS 274702 CKT 1 / LOCKP; B 345 KEND
AEP_P1-2_#695A	CONTINGENCY 'AEP_P1-2_#695A' OPEN BRANCH FROM BUS 243206 TO BUS 270644 CKT 1 / 243206 05DUMONT 765 270644 WILTON ; 765 1 END
COMED_P1-2_345-L0304__R-S	CONTINGENCY 'COMED_P1-2_345-L0304__R-S' TRIP BRANCH FROM BUS 270855 TO BUS 349662 CKT 1 / POWER; R 345 7TAZEWELL 345 END
COMED_P4_112-65-BT2-3__	CONTINGENCY 'COMED_P4_112-65-BT2-3__' TRIP BRANCH FROM BUS 270644 TO BUS 270607 CKT 1 / WILTO; 765 COLLI; 765 TRIP BRANCH FROM BUS 275232 TO BUS 270644 CKT 1 / WILTO;3M 345 WILTO; 765 TRIP BRANCH FROM BUS 275232 TO BUS 270926 CKT 1 / WILTO;3M 345 WILTO; B 345 TRIP BRANCH FROM BUS 275232 TO BUS 275332 CKT 1 / WILTO;3M 345 WILTO;3C 33 END
COMED_P2-2_111_EJ-345B__2	CONTINGENCY 'COMED_P2-2_111_EJ-345B__2' TRIP BRANCH FROM BUS 270730 TO BUS 270846 CKT 1 / ELECT; B 345 PLANO; B 345 TRIP BRANCH FROM BUS 270730 TO BUS 270916 CKT 1 / ELECT; B 345 WAYNE; B 345 TRIP BRANCH FROM BUS 270730 TO BUS 270928 CKT 1 / ELECT; B 345 WOLFS; B 345 TRIP BRANCH FROM BUS 270928 TO BUS 272794 TO BUS 275334 CKT 1 / WOLFS; B 345 WOLFS; B 138 WOLFS;1C 34.5 DISCONNECT BUS 275239 / ELECT;2M 138 END

© PJM Interconnection 2020. All rights reserved

Contingency Name	Contingency Definition
COMED_P1-2_345-L11622_R-S	CONTINGENCY 'COMED_P1-2_345-L11622_R-S' TRIP BRANCH FROM BUS 270737 TO BUS 270769 CKT 1 / ELWOO; R 345 GOODI;1R 345 END
COMED_P4_112-65-BT5-6__	CONTINGENCY 'COMED_P4_112-65-BT5-6__' TRIP BRANCH FROM BUS 270644 TO BUS 270607 CKT 1 / WILTO; 765 COLLI; 765 TRIP BRANCH FROM BUS 275233 TO BUS 270644 CKT 1 / WILTO;4M 345 WILTO; 765 TRIP BRANCH FROM BUS 275233 TO BUS 270927 CKT 1 / WILTO;4M 345 WILTO; R 345 TRIP BRANCH FROM BUS 275233 TO BUS 275333 CKT 1 / WILTO;4M 345 WILTO;4C 33 END
AEP_P4_#2978_05DUMONT 765_B	CONTINGENCY 'AEP_P4_#2978_05DUMONT 765_B' OPEN BRANCH FROM BUS 243206 TO BUS 243207 CKT 1 / 243206 05DUMONT 765 243207 05GRNTWN 765 1 OPEN BRANCH FROM BUS 243206 TO BUS 270644 CKT 1 / 243206 05DUMONT 765 270644 WILTON ; 765 1 END

12 Light Load Analysis

12.1 Generation Deliverability

(Single or N-1 contingencies for the Capacity portion only of the interconnection)

None

12.2 Multiple Facility Contingency

(Double Circuit Tower Line, Fault with a Stuck Breaker, and Bus Fault contingencies for the full energy output)

None

12.3 Contribution to Previously Identified Overloads

(This project contributes to the following contingency overloads, i.e. "Network Impacts", identified for earlier generation or transmission interconnection projects in the PJM Queue)

ID	FROM BUS#	FROM BUS	kV	FROM BUS AREA	TO BUS#	TO BUS	kV	TO BUS AREA	CKT ID	CONT NAME	Type	Rating MVA	PRE PROJECT LOADING %	POST PROJECT LOADING %	AC|DC	MW IMPACT
5835669	243211	05ALLEN	345.0	AEP	242933	05RPMONE	345.0	AEP	1	AEP_P1-2_#7441-A	single	897.0	113.52	115.42	DC	17.04
5835670	243211	05ALLEN	345.0	AEP	242933	05RPMONE	345.0	AEP	1	AEP_P1-2_#7441-B	single	897.0	105.36	107.26	AC	17.04
688039	270926	WILTON ; B	345.0	CE	275232	WILTON ;3M	345.0	CE	1	COMED_P4_112-65-BT5-6__	breaker	1379.0	104.57	107.07	DC	34.42
688042	270927	WILTON ; R	345.0	CE	275233	WILTON ;4M	345.0	CE	1	COMED_P4_112-65-BT2-3__	breaker	1379.0	106.87	109.42	DC	35.15

© PJM Interconnection 2020. All rights reserved

ID	FROM BUS#	FROM BUS	kV	FROM BUS AREA	TO BUS#	TO BUS	kV	TO BUS AREA	CKT ID	CONT NAME	Type	Rating MVA	PRE PROJECT LOADING %	POST PROJECT LOADING %	AC|DC	MW IMPACT
688038	275232	WILTON ;3M	345.0	CE	270644	WILTON ;	765.0	CE	1	COMED_P4_112-65-BT5-6__	breaker	1379.0	102.16	104.66	DC	34.42
688041	275233	WILTON ;4M	345.0	CE	270644	WILTON ;	765.0	CE	1	COMED_P4_112-65-BT2-3__	breaker	1379.0	105.41	107.96	DC	35.15

12.4 Potential Congestion due to Local Energy Deliverability

PJM also studied the delivery of the energy portion of this interconnection request. Any problems identified below are likely to result in operational restrictions to the project under study. The developer can proceed with network upgrades to eliminate the operational restriction at their discretion by submitting a Merchant Transmission Interconnection request.

Note: Only the most severely overloaded conditions are listed below. There is no guarantee of full delivery of energy for this project by fixing only the conditions listed in this section. With a Transmission Interconnection Request, a subsequent analysis will be performed which shall study all overload conditions associated with the overloaded element(s) identified.

ID	FROM BUS#	FROM BUS	kV	FROM BUS AREA	TO BUS#	TO BUS	kV	TO BUS AREA	CKT ID	CONT NAME	Type	Rating MVA	PRE PROJECT LOADING %	POST PROJECT LOADING %	AC|DC	MW IMPACT
5835672	243211	05ALLEN	345.0	AEP	242933	05RPMONE	345.0	AEP	1	AEP_P1-2_#7441-A	operation	897.0	89.23	90.85	AC	17.04
362460	255113	17STILLWELL	345.0	NIPS	243219	05DUMONT	345.0	AEP	1	AEP_P1-2_#695A	operation	1409.0	83.19	85.51	AC	33.13
688799	274750	CRETE EC ;BP	345.0	CE	255112	17STJOHN	345.0	NIPS	1	AEP_P1-2_#695A	operation	1557.0	81.78	83.68	AC	29.84

12.5 System Reinforcements

ID	Index	Facility	Upgrade Description	Cost
688038, 688039, 688042, 688041	8, 6, 7, 9	**WILTON ; B 345.0 kV - WILTON ;3M 345.0 kV Ckt 1 & WILTON ; R 345.0 kV - WILTON ;4M 345.0 kV Ckt 1 & WILTON ;4M 345.0 kV - WILTON ; 765.0 kV Ckt 1 & WILTON ;3M 345.0 kV - WILTON ; 765.0 kV Ckt 1**	**n5145 (8) : PJM Network Upgrade (n5145): Reconfigure Wilton 765kV bus thereby allowing for 765kV L11216 (currently on Bus 6) to be relocated to Bus 8. Along with this line relocation, installation of 2-765kV BT CBs (6-8 & 8-2).** **Project Type : CON** **Cost : $12,000,000** **Time Estimate : 30 Months**	Reinforcement identified in Summer Peak Impact Study. See Summer Peak Cost Allocation

© PJM Interconnection 2020. All rights reserved

<table>
<tr><th>ID</th><th>Index</th><th>Facility</th><th>Upgrade Description</th><th>Cost</th></tr>
<tr><td>5835669,5835671,5835670</td><td>5</td><td>05ALLEN 345.0 kV - 05RPMONE 345.0 kV Ckt 1</td><td>AEPO00031 (6) : Limiting elements are:
1. The 12.21 mile ACSR/PE ~ 1275 ~ 54/19 ~ conductor section 3
2. The 6.07 mile ACSR/PE ~ 1414 ~ 62/19 ~ conductor section 2
Mitigation to relieve this overload is:
1. A Sag Study will be required on the 12.21-mile section of line to mitigate the overload. Depending on the sag study results, cost for this upgrade is expected to be between $50,000 (no remediation required just sag study) and $24.42 million (complete line Reconductor/rebuild required).
2. A Sag Study will be required on the 6.07-mile section of line to mitigate the overload. Depending on the sag study results, cost for this upgrade is expected to be between $25,000 (no remediation required just sag study) and $12.14 million (complete line Reconductor/rebuild required).
New Rating Post Improvement: S/N: 897 MVA S/E: 1375 MVA
Project Type : FAC
Cost : $36,635,000
Time Estimate : 6-12 Months

The cost allocation table is as follows:
<table>
<tr><th>Queue</th><th>MW contribution</th><th>Percentage of Cost</th><th>Cost ($36,635,000)</th></tr>
<tr><td>AD1-100</td><td>39.48</td><td>23.48%</td><td>$8,603,069.71</td></tr>
<tr><td>AD1-104</td><td>29.19</td><td>17.36%</td><td>$6,359,690.72</td></tr>
<tr><td>AD1-137</td><td>24.00</td><td>14.28%</td><td>$5,230,701.25</td></tr>
<tr><td>AD2-047</td><td>10.67</td><td>6.35%</td><td>$2,325,879.56</td></tr>
<tr><td>AD2-101</td><td>10.72</td><td>6.38%</td><td>$2,336,339.21</td></tr>
<tr><td>AD2-132</td><td>10.42</td><td>6.20%</td><td>$2,270,094.71</td></tr>
<tr><td>AD2-138</td><td>10.42</td><td>6.20%</td><td>$2,270,094.71</td></tr>
<tr><td>AD2-142</td><td>16.18</td><td>9.62%</td><td>$3,525,951.12</td></tr>
<tr><td>AE1-113</td><td>17.04</td><td>10.14%</td><td>$3,713,179.02</td></tr>
</table></td><td>$3,713,179.02</td></tr>
<tr><td></td><td></td><td></td><td>TOTAL COST</td><td>$3,713,179.02</td></tr>
</table>

12.6 Flow Gate Details

The following indices contain additional information about each flowgate presented in the body of the report. For each appendix, a description of the flowgate and its contingency was included for convenience. However, the intent of the appendix section is to provide more information on which projects/generators have contributions to the flowgate in question. Although this information is not used "as is" for cost allocation purposes, it can be used to gage other generators impact. It should be noted the generator contributions presented in the appendices sections are full contributions, whereas in the body of the report, those contributions take into consideration the commercial probability of each project.

12.6.1 Index 5

© PJM Interconnection 2020. All rights reserved

ID	FROM BUS#	FROM BUS	FROM BUS AREA	TO BUS#	TO BUS	TO BUS AREA	CKT ID	CONT NAME	Type	Rating MVA	PRE PROJECT LOADING %	POST PROJECT LOADING %	AC|DC	MW IMPACT
5835669	243211	05ALLEN	AEP	242933	05RPMONE	AEP	1	AEP_P1-2_#7441-A	single	897.0	113.52	115.42	DC	17.04

Bus #	Bus	MW Impact
243795	05HDWTR1G C	0.6803
243859	05FR-11G C	0.5292
243862	05FR-12G C	0.5211
243864	05FR-21G C	0.5562
243866	05FR-22G C	0.5319
243870	05FR-3G C	1.0774
243873	05FR-4G C	0.8343
246909	05MDL-1G C	1.1256
246910	05MDL-2G C	0.5628
246953	05TIMB G C	1.1068
246976	05MDL-3G C	0.5628
246979	05MDL-4G C	1.1256
246991	05WLD G1 C	0.3380
247255	05WLD G2 C	0.3549
247521	T-131 C	1.2989
247536	S-071 C	0.6319
247543	V3-007 C	1.3541
247901	05FR-12G E	2.0791
247902	05FR-21G E	2.2222
247904	05FR-3G E	4.3094
247905	05FR-4G E	3.2402
247906	05MDL-1G E	4.4938
247907	05MDL-2G E	2.2286
247911	05TIMB G E	4.4566
247912	05MDL-3G E	2.3299
247913	05MDL-4G E	2.2511
247914	05WLD G1 E	4.5058
247925	T-131 E	5.1954
247929	S-071 E	2.5277
247935	V3-007 E	9.0619
247943	T-127 E	2.2511
247958	05WLD G2 E	2.3751
247963	05HDWTR1G E	1.6390
274847	GR RIDGE ;BU	0.8842
274848	CAMPGROVE;RU	0.8020
274849	CRESCENT ;1U	0.2630
274850	MENDOTA H;RU	0.1695
274851	PROVIDENC;RU	0.4012
274853	TWINGROVE;U1	1.0411
274854	TWINGROVE;U2	1.0411
274855	GSG-6 ;RU	0.6188
274856	ECOGROVE ;U1	0.5586
274857	BIG SKY ;U1	0.6620
274858	BIG SKY ;U2	0.6620
274859	EASYR;U1 E	2.6481

© PJM Interconnection 2020. All rights reserved

Bus #	Bus	MW Impact
274860	EASYR;U2 E	2.6481
274861	TOP CROP ;1U	0.5933
274862	TOP CROP ;2U	1.1517
274863	CAYUGA RI;1U	0.8461
274864	CAYUGA RI;2U	0.8461
274871	GR RIDGE ;2U	1.1229
274872	LEE DEKAL;1U	1.3698
274877	BISHOP HL;1U	0.5387
274878	BISHOP HL;2U	0.5387
274879	MINONK ;1U	1.1415
274881	PLEAS RDG;2U	1.0515
274887	PILOT HIL;1U	1.0515
274888	PILOT HIL;1E	4.2061
274890	CAYUG;1U E	3.3844
274891	CAYUG;2U E	3.3844
275149	KEMPTON ;1E	4.2061
290021	O50 E	4.5659
290051	GSG-6; E	2.4752
290108	LEEDK;1U E	5.7073
290261	S-027 E	4.1643
290265	S-028 E	4.1643
293061	N-015 E	3.5368
293513	O-009 C1	0.5572
293514	O-009 C2	0.2827
293515	O-009 C3	0.3126
293516	O-009 E1	2.2300
293517	O-009 E2	1.1327
293518	O-009 E3	1.2474
293644	O22 E1	2.3732
293645	O22 E2	4.6068
293712	O-029 C	0.5961
293713	O-029 C	0.3266
293714	O-029 C	0.3021
293715	O-029 E	2.3873
293716	O-029 E	1.3089
293717	O-029 E	1.2031
293771	O-035 E	1.6049
294392	P-010 E	4.4917
294401	BSHIL;1U E	2.1546
294410	BSHIL;2U E	2.1546
294763	P-046 E	2.2344
296125	R-030 C3	0.9220
296128	R-030 E3	3.6879
296271	R-030 C2	0.9110
296272	R-030 E2	3.6440
296308	R-030 C1	0.9110
296309	R-030 E1	3.6440
905081	W4-005 C	1.1594
905082	W4-005 E	7.7650
909052	X2-022 E	9.2340
916211	Z1-072 E	1.2145
916221	Z1-073 E	1.2771

© PJM Interconnection 2020. All rights reserved

Bus #	Bus	MW Impact
917501	Z2-087 C	1.4194
917502	Z2-087 E	9.4990
918051	AA1-018 C	1.1268
918052	AA1-018 E	7.5408
919621	AA2-039 C	1.0454
919622	AA2-039 E	6.9958
920272	AA2-123 E	1.4232
920501	AA2-148 C O1	0.9455
920502	AA2-148 E O1	6.3275
923881	AB2-028 C	1.3327
923882	AB2-028 E	8.9185
924041	AB2-047 C O1	1.7675
924042	AB2-047 E O1	11.8285
924261	AB2-070 C O1	1.2942
924262	AB2-070 E O1	8.6610
925301	AB2-191 C	0.3544
925302	AB2-191 E	0.4894
925581	AC1-033 C	0.7023
925582	AC1-033 E	4.7014
925771	AC1-053 C	1.2898
925772	AC1-053 E	8.6318
926821	AC1-168 C O1	0.5620
926822	AC1-168 E O1	3.7713
926841	AC1-171 C O1	0.5326
926842	AC1-171 E O1	3.5572
926861	AC1-173 C	0.8531
926862	AC1-173 E	5.6876
926901	AC1-176 C	0.5581
926902	AC1-176 E	3.7524
927201	AC1-214 C O1	1.0252
927202	AC1-214 E O1	3.2592
932601	AC2-080 C O1	1.5163
932602	AC2-080 E O1	10.1477
932801	AC2-104 C	5.3028
932802	AC2-104 E	35.4896
933281	AC2-140 C	3.1293
933282	AC2-140 E	0.1647
933591	AC2-176 C O1	0.9553
933592	AC2-176 E O1	6.3933
933601	AC2-177 C O1	1.3541
933602	AC2-177 E O1	9.0619
934401	AD1-064 C O1	1.4974
934402	AD1-064 E O1	7.0106
934431	AD1-067 C	0.0619
934432	AD1-067 E	0.2601
934721	AD1-100 C	8.8692
934722	AD1-100 E	41.3896
934771	AD1-104 C	4.2742
934772	AD1-104 E	28.6043
935141	AD1-148	2.4132
935271	AD1-137 C	3.4934
935272	AD1-137 E	23.3786

© PJM Interconnection 2020. All rights reserved

Bus #	Bus	MW Impact
936291	AD2-038 C O1	1.1037
936292	AD2-038 E O1	7.3863
936371	AD2-047 C O1	2.0332
936372	AD2-047 E O1	9.9268
936681	AD2-087 C O1	1.6082
936682	AD2-087 E O1	7.5294
936721	AD2-091	6.8480
936751	AD2-096 O1	3.1715
936972	AD2-131 E	2.8940
937001	AD2-134 C	1.2879
937002	AD2-134 E	5.3203
937041	AD2-138 C	2.0529
937042	AD2-138 E	9.6111
937211	AD2-159 C	1.6701
937212	AD2-159 E	7.8189
938851	AE1-113 C O1	4.1123
938852	AE1-113 E O1	12.9277
938861	AE1-114 C O1	1.7167
938862	AE1-114 E O1	6.5633
939321	AE1-163 C O1	2.7734
939322	AE1-163 E O1	17.0366
939401	AE1-172 C	2.5529
939402	AE1-172 E	11.9780
939641	AE1-194 C	4.0175
939642	AE1-194 E	26.8865
939651	AE1-195 C	4.0175
939652	AE1-195 E	26.8865
939732	AE1-204 E	0.3174
939791	AE1-210 C O1	0.7633
939792	AE1-210 E O1	5.1079
990901	L-005 E	3.2078

12.6.2 Index 6

ID	FROM BUS#	FROM BUS	FROM BUS AREA	TO BUS#	TO BUS	TO BUS AREA	CKT ID	CONT NAME	Type	Rating MVA	PRE PROJECT LOADING %	POST PROJECT LOADING %	AC|DC	MW IMPACT
688039	270926	WILTON ; B	CE	275232	WILTON ;3M	CE	1	COMED_P4_112-65-BT5-6__	breaker	1379.0	104.57	107.07	DC	34.42

Bus #	Bus	MW Impact
274847	GR RIDGE ;BU	1.8923
274848	CAMPGROVE;RU	1.4987
274849	CRESCENT ;1U	0.5011
274850	MENDOTA H;RU	0.3402
274851	PROVIDENC;RU	0.7646
274853	TWINGROVE;U1	1.9749
274854	TWINGROVE;U2	1.9749
274855	GSG-6 ;RU	1.2419

© PJM Interconnection 2020. All rights reserved

Bus #	Bus	MW Impact
274856	ECOGROVE ;U1	1.1126
274857	BIG SKY ;U1	1.3040
274858	BIG SKY ;U2	1.3040
274859	EASYR;U1 E	5.2159
274860	EASYR;U2 E	5.2159
274861	TOP CROP ;1U	1.2207
274862	TOP CROP ;2U	2.3696
274863	CAYUGA RI;1U	1.9795
274864	CAYUGA RI;2U	1.9795
274871	GR RIDGE ;2U	2.4033
274872	LEE DEKAL;1U	2.7717
274877	BISHOP HL;1U	1.0206
274878	BISHOP HL;2U	1.0206
274879	MINONK ;1U	2.3054
274881	PLEAS RDG;2U	2.2871
274887	PILOT HIL;1U	2.2871
274888	PILOT HIL;1E	9.1483
274890	CAYUG;1U E	7.9181
274891	CAYUG;2U E	7.9181
275149	KEMPTON ;1E	9.1483
290021	O50 E	9.2218
290051	GSG-6; E	4.9676
290108	LEEDK;1U E	11.5489
290261	S-027 E	7.8995
290265	S-028 E	7.8995
293061	N-015 E	7.5694
293513	O-009 C1	1.0767
293514	O-009 C2	0.5462
293515	O-009 C3	0.6040
293516	O-009 E1	4.3090
293517	O-009 E2	2.1887
293518	O-009 E3	2.4103
293644	O22 E1	4.8828
293645	O22 E2	9.4784
293712	O-029 C	1.1578
293713	O-029 C	0.6344
293714	O-029 C	0.5868
293715	O-029 E	4.6372
293716	O-029 E	2.5425
293717	O-029 E	2.3368
293771	O-035 E	3.0585
294392	P-010 E	9.6131
294401	BSHIL;1U E	4.0823
294410	BSHIL;2U E	4.0823
294763	P-046 E	4.4504
296125	R-030 C3	1.9391
296128	R-030 E3	7.7566
296271	R-030 C2	1.9161
296272	R-030 E2	7.6642
296308	R-030 C1	1.9161
296309	R-030 E1	7.6642
905081	W4-005 C	2.0029

© PJM Interconnection 2020. All rights reserved

Bus #	Bus	MW Impact
905082	W4-005 E	13.4139
909052	X2-022 E	12.4185
916211	Z1-072 E	2.3145
916221	Z1-073 E	2.5632
917501	Z2-087 C	2.9813
917502	Z2-087 E	19.9515
918051	AA1-018 C	2.3278
918052	AA1-018 E	15.5786
919621	AA2-039 C	1.9806
919622	AA2-039 E	13.2546
920272	AA2-123 E	2.8908
924041	AB2-047 C O1	3.6772
924042	AB2-047 E O1	24.6088
924261	AB2-070 C O1	2.0933
924262	AB2-070 E O1	14.0091
925301	AB2-191 C	0.7112
925302	AB2-191 E	0.9822
925581	AC1-033 C	1.3306
925582	AC1-033 E	8.9082
925771	AC1-053 C	1.7611
925772	AC1-053 E	11.7859
926821	AC1-168 C O1	1.1019
926822	AC1-168 E O1	7.3948
926841	AC1-171 C O1	0.9419
926842	AC1-171 E O1	6.2916
927201	AC1-214 C O1	1.9538
927202	AC1-214 E O1	6.2111
934401	AD1-064 C O1	3.0322
934402	AD1-064 E O1	14.1962
934431	AD1-067 C	0.1242
934432	AD1-067 E	0.5220
934721	AD1-100 C	23.0256
934722	AD1-100 E	107.4528
935141	AD1-148	3.2454
936291	AD2-038 C O1	2.2272
936292	AD2-038 E O1	14.9052
936371	AD2-047 C O1	4.4216
936372	AD2-047 E O1	21.5880
936972	AD2-131 E	3.9550
937001	AD2-134 C	2.5848
937002	AD2-134 E	10.6777
937211	AD2-159 C	2.8850
937212	AD2-159 E	13.5070
938851	AE1-113 C O1	8.3057
938852	AE1-113 E O1	26.1103
938861	AE1-114 C O1	3.3969
938862	AE1-114 E O1	12.9867
939321	AE1-163 C O1	5.5966
939322	AE1-163 E O1	34.3790
939401	AE1-172 C	6.2974
939402	AE1-172 E	29.5474
939641	AE1-194 C	5.8323

© PJM Interconnection 2020. All rights reserved

Bus #	Bus	MW Impact
939642	AE1-194 E	39.0317
939651	AE1-195 C	5.8323
939652	AE1-195 E	39.0317
939732	AE1-204 E	0.6526
990901	L-005 E	5.9946

12.6.3 Index 7

ID	FROM BUS#	FROM BUS	FROM BUS AREA	TO BUS#	TO BUS	TO BUS AREA	CKT ID	CONT NAME	Type	Rating MVA	PRE PROJECT LOADING %	POST PROJECT LOADING %	AC|DC	MW IMPACT
688042	270927	WILTON ; R	CE	275233	WILTON ;4M	CE	1	COMED_P4_112-65-BT2-3__	breaker	1379.0	106.87	109.42	DC	35.15

Bus #	Bus	MW Impact
274847	GR RIDGE ;BU	1.9319
274848	CAMPGROVE;RU	1.5304
274849	CRESCENT ;1U	0.5117
274850	MENDOTA H;RU	0.3475
274851	PROVIDENC;RU	0.7808
274853	TWINGROVE;U1	2.0148
274854	TWINGROVE;U2	2.0148
274855	GSG-6 ;RU	1.2684
274856	ECOGROVE ;U1	1.1364
274857	BIG SKY ;U1	1.3318
274858	BIG SKY ;U2	1.3318
274859	EASYR;U1 E	5.3270
274860	EASYR;U2 E	5.3270
274861	TOP CROP ;1U	1.2465
274862	TOP CROP ;2U	2.4197
274863	CAYUGA RI;1U	2.0190
274864	CAYUGA RI;2U	2.0190
274871	GR RIDGE ;2U	2.4535
274872	LEE DEKAL;1U	2.8308
274877	BISHOP HL;1U	1.0421
274878	BISHOP HL;2U	1.0421
274879	MINONK ;1U	2.3546
274881	PLEAS RDG;2U	2.3350
274887	PILOT HIL;1U	2.3350
274888	PILOT HIL;1E	9.3402
274890	CAYUG;1U E	8.0758
274891	CAYUG;2U E	8.0758
275149	KEMPTON ;1E	9.3402
290021	O50 E	9.4186
290051	GSG-6; E	5.0736
290108	LEEDK;1U E	11.7949
290261	S-027 E	8.0593
290265	S-028 E	8.0593
293061	N-015 E	7.7276

© PJM Interconnection 2020. All rights reserved

Bus #	Bus	MW Impact
293513	O-009 C1	1.0996
293514	O-009 C2	0.5579
293515	O-009 C3	0.6169
293516	O-009 E1	4.4007
293517	O-009 E2	2.2352
293518	O-009 E3	2.4616
293644	O22 E1	4.9861
293645	O22 E2	9.6790
293712	O-029 C	1.1825
293713	O-029 C	0.6479
293714	O-029 C	0.5993
293715	O-029 E	4.7359
293716	O-029 E	2.5966
293717	O-029 E	2.3866
293771	O-035 E	3.1232
294392	P-010 E	9.8140
294401	BSHIL;1U E	4.1684
294410	BSHIL;2U E	4.1684
294763	P-046 E	4.5456
296125	R-030 C3	1.9784
296128	R-030 E3	7.9137
296271	R-030 C2	1.9549
296272	R-030 E2	7.8195
296308	R-030 C1	1.9549
296309	R-030 E1	7.8195
905081	W4-005 C	2.0437
905082	W4-005 E	13.6876
909052	X2-022 E	12.6735
916211	Z1-072 E	2.3635
916221	Z1-073 E	2.6179
917501	Z2-087 C	3.0416
917502	Z2-087 E	20.3552
918051	AA1-018 C	2.3788
918052	AA1-018 E	15.9200
919621	AA2-039 C	2.0224
919622	AA2-039 E	13.5344
920272	AA2-123 E	2.9526
924041	AB2-047 C O1	3.7515
924042	AB2-047 E O1	25.1065
924261	AB2-070 C O1	2.1362
924262	AB2-070 E O1	14.2958
925301	AB2-191 C	0.7264
925302	AB2-191 E	1.0031
925581	AC1-033 C	1.3587
925582	AC1-033 E	9.0962
925771	AC1-053 C	2.1141
925772	AC1-053 E	14.1483
926821	AC1-168 C O1	1.1251
926822	AC1-168 E O1	7.5503
926841	AC1-171 C O1	0.9617
926842	AC1-171 E O1	6.4237
927201	AC1-214 C O1	1.9952

© PJM Interconnection 2020. All rights reserved

Bus #	Bus	MW Impact
927202	AC1-214 E O1	6.3425
934401	AD1-064 C O1	3.0968
934402	AD1-064 E O1	14.4988
934431	AD1-067 C	0.1268
934432	AD1-067 E	0.5332
934721	AD1-100 C	23.4816
934722	AD1-100 E	109.5808
935141	AD1-148	3.3120
936291	AD2-038 C O1	2.2754
936292	AD2-038 E O1	15.2278
936371	AD2-047 C O1	4.5144
936372	AD2-047 E O1	22.0408
936972	AD2-131 E	4.0360
937001	AD2-134 C	2.6399
937002	AD2-134 E	10.9055
937211	AD2-159 C	2.9439
937212	AD2-159 E	13.7826
938851	AE1-113 C O1	8.4830
938852	AE1-113 E O1	26.6674
938861	AE1-114 C O1	3.4693
938862	AE1-114 E O1	13.2635
939321	AE1-163 C O1	5.7177
939322	AE1-163 E O1	35.1231
939401	AE1-172 C	6.4222
939402	AE1-172 E	30.1326
939641	AE1-194 C	5.9561
939642	AE1-194 E	39.8599
939651	AE1-195 C	5.9561
939652	AE1-195 E	39.8599
939732	AE1-204 E	0.6666
990901	L-005 E	6.1215

12.6.4 Index 8

ID	FROM BUS#	FROM BUS	FROM BUS AREA	TO BUS#	TO BUS	TO BUS AREA	CKT ID	CONT NAME	Type	Rating MVA	PRE PROJECT LOADING %	POST PROJECT LOADING %	AC|DC	MW IMPACT
688038	275232	WILTON ;3M	CE	270644	WILTON ;	CE	1	COMED_P4_112-65-BT5-6__	breaker	1379.0	102.16	104.66	DC	34.42

Bus #	Bus	MW Impact
274847	GR RIDGE ;BU	1.8923
274848	CAMPGROVE;RU	1.4987
274849	CRESCENT ;1U	0.5011
274850	MENDOTA H;RU	0.3402
274851	PROVIDENC;RU	0.7646
274853	TWINGROVE;U1	1.9749
274854	TWINGROVE;U2	1.9749
274855	GSG-6 ;RU	1.2419

© PJM Interconnection 2020. All rights reserved

Bus #	Bus	MW Impact
274856	ECOGROVE ;U1	1.1126
274857	BIG SKY ;U1	1.3040
274858	BIG SKY ;U2	1.3040
274859	EASYR;U1 E	5.2159
274860	EASYR;U2 E	5.2159
274861	TOP CROP ;1U	1.2207
274862	TOP CROP ;2U	2.3696
274863	CAYUGA RI;1U	1.9795
274864	CAYUGA RI;2U	1.9795
274871	GR RIDGE ;2U	2.4033
274872	LEE DEKAL;1U	2.7717
274877	BISHOP HL;1U	1.0206
274878	BISHOP HL;2U	1.0206
274879	MINONK ;1U	2.3054
274881	PLEAS RDG;2U	2.2871
274887	PILOT HIL;1U	2.2871
274888	PILOT HIL;1E	9.1483
274890	CAYUG;1U E	7.9181
274891	CAYUG;2U E	7.9181
275149	KEMPTON ;1E	9.1483
290021	O50 E	9.2218
290051	GSG-6; E	4.9676
290108	LEEDK;1U E	11.5489
290261	S-027 E	7.8995
290265	S-028 E	7.8995
293061	N-015 E	7.5694
293513	O-009 C1	1.0767
293514	O-009 C2	0.5462
293515	O-009 C3	0.6040
293516	O-009 E1	4.3090
293517	O-009 E2	2.1887
293518	O-009 E3	2.4103
293644	O22 E1	4.8828
293645	O22 E2	9.4784
293712	O-029 C	1.1578
293713	O-029 C	0.6344
293714	O-029 C	0.5868
293715	O-029 E	4.6372
293716	O-029 E	2.5425
293717	O-029 E	2.3368
293771	O-035 E	3.0585
294392	P-010 E	9.6131
294401	BSHIL;1U E	4.0823
294410	BSHIL;2U E	4.0823
294763	P-046 E	4.4504
296125	R-030 C3	1.9391
296128	R-030 E3	7.7566
296271	R-030 C2	1.9161
296272	R-030 E2	7.6642
296308	R-030 C1	1.9161
296309	R-030 E1	7.6642
905081	W4-005 C	2.0029

© PJM Interconnection 2020. All rights reserved

Bus #	Bus	MW Impact
905082	W4-005 E	13.4139
916211	Z1-072 E	2.3145
916221	Z1-073 E	2.5632
917501	Z2-087 C	2.9813
917502	Z2-087 E	19.9515
918051	AA1-018 C	2.3278
918052	AA1-018 E	15.5786
919621	AA2-039 C	1.9806
919622	AA2-039 E	13.2546
920272	AA2-123 E	2.8908
924041	AB2-047 C O1	3.6772
924042	AB2-047 E O1	24.6088
924261	AB2-070 C O1	2.0933
924262	AB2-070 E O1	14.0091
925301	AB2-191 C	0.7112
925302	AB2-191 E	0.9822
925581	AC1-033 C	1.3306
925582	AC1-033 E	8.9082
926821	AC1-168 C O1	1.1019
926822	AC1-168 E O1	7.3948
926841	AC1-171 C O1	0.9419
926842	AC1-171 E O1	6.2916
927201	AC1-214 C O1	1.9538
927202	AC1-214 E O1	6.2111
934401	AD1-064 C O1	3.0322
934402	AD1-064 E O1	14.1962
934431	AD1-067 C	0.1242
934432	AD1-067 E	0.5220
934721	AD1-100 C	23.0256
934722	AD1-100 E	107.4528
936291	AD2-038 C O1	2.2272
936292	AD2-038 E O1	14.9052
936371	AD2-047 C O1	4.4216
936372	AD2-047 E O1	21.5880
937001	AD2-134 C	2.5848
937002	AD2-134 E	10.6777
937211	AD2-159 C	2.8850
937212	AD2-159 E	13.5070
938851	AE1-113 C O1	8.3057
938852	AE1-113 E O1	26.1103
938861	AE1-114 C O1	3.3969
938862	AE1-114 E O1	12.9867
939321	AE1-163 C O1	5.5966
939322	AE1-163 E O1	34.3790
939401	AE1-172 C	6.2974
939402	AE1-172 E	29.5474
939641	AE1-194 C	5.8323
939642	AE1-194 E	39.0317
939651	AE1-195 C	5.8323
939652	AE1-195 E	39.0317
939732	AE1-204 E	0.6526
990901	L-005 E	5.9946

© PJM Interconnection 2020. All rights reserved

12.6.5 Index 9

ID	FROM BUS#	FROM BUS	FROM BUS AREA	TO BUS#	TO BUS	TO BUS AREA	CKT ID	CONT NAME	Type	Rating MVA	PRE PROJECT LOADING %	POST PROJECT LOADING %	AC|DC	MW IMPACT
688041	275233	WILTON ;4M	CE	270644	WILTON ;	CE	1	COMED_P4_112-65-BT2-3__	breaker	1379.0	105.41	107.96	DC	35.15

Bus #	Bus	MW Impact
274847	GR RIDGE ;BU	1.9319
274848	CAMPGROVE;RU	1.5304
274849	CRESCENT ;1U	0.5117
274850	MENDOTA H;RU	0.3475
274851	PROVIDENC;RU	0.7808
274853	TWINGROVE;U1	2.0148
274854	TWINGROVE;U2	2.0148
274855	GSG-6 ;RU	1.2684
274856	ECOGROVE ;U1	1.1364
274857	BIG SKY ;U1	1.3318
274858	BIG SKY ;U2	1.3318
274859	EASYR;U1 E	5.3270
274860	EASYR;U2 E	5.3270
274861	TOP CROP ;1U	1.2465
274862	TOP CROP ;2U	2.4197
274863	CAYUGA RI;1U	2.0190
274864	CAYUGA RI;2U	2.0190
274871	GR RIDGE ;2U	2.4535
274872	LEE DEKAL;1U	2.8308
274877	BISHOP HL;1U	1.0421
274878	BISHOP HL;2U	1.0421
274879	MINONK ;1U	2.3546
274881	PLEAS RDG;2U	2.3350
274887	PILOT HIL;1U	2.3350
274888	PILOT HIL;1E	9.3402
274890	CAYUG;1U E	8.0758
274891	CAYUG;2U E	8.0758
275149	KEMPTON ;1E	9.3402
290021	O50 E	9.4186
290051	GSG-6; E	5.0736
290108	LEEDK;1U E	11.7949
290261	S-027 E	8.0593
290265	S-028 E	8.0593
293061	N-015 E	7.7276
293513	O-009 C1	1.0996
293514	O-009 C2	0.5579
293515	O-009 C3	0.6169
293516	O-009 E1	4.4007
293517	O-009 E2	2.2352
293518	O-009 E3	2.4616
293644	O22 E1	4.9861
293645	O22 E2	9.6790

© PJM Interconnection 2020. All rights reserved

Bus #	Bus	MW Impact
293712	O-029 C	1.1825
293713	O-029 C	0.6479
293714	O-029 C	0.5993
293715	O-029 E	4.7359
293716	O-029 E	2.5966
293717	O-029 E	2.3866
293771	O-035 E	3.1232
294392	P-010 E	9.8140
294401	BSHIL;1U E	4.1684
294410	BSHIL;2U E	4.1684
294763	P-046 E	4.5456
296125	R-030 C3	1.9784
296128	R-030 E3	7.9137
296271	R-030 C2	1.9549
296272	R-030 E2	7.8195
296308	R-030 C1	1.9549
296309	R-030 E1	7.8195
905081	W4-005 C	2.0437
905082	W4-005 E	13.6876
916211	Z1-072 E	2.3635
916221	Z1-073 E	2.6179
917501	Z2-087 C	3.0416
917502	Z2-087 E	20.3552
918051	AA1-018 C	2.3788
918052	AA1-018 E	15.9200
919621	AA2-039 C	2.0224
919622	AA2-039 E	13.5344
920272	AA2-123 E	2.9526
924041	AB2-047 C O1	3.7515
924042	AB2-047 E O1	25.1065
924261	AB2-070 C O1	2.1362
924262	AB2-070 E O1	14.2958
925301	AB2-191 C	0.7264
925302	AB2-191 E	1.0031
925581	AC1-033 C	1.3587
925582	AC1-033 E	9.0962
925771	AC1-053 C	2.1141
925772	AC1-053 E	14.1483
926821	AC1-168 C O1	1.1251
926822	AC1-168 E O1	7.5503
926841	AC1-171 C O1	0.9617
926842	AC1-171 E O1	6.4237
927201	AC1-214 C O1	1.9952
927202	AC1-214 E O1	6.3425
934401	AD1-064 C O1	3.0968
934402	AD1-064 E O1	14.4988
934431	AD1-067 C	0.1268
934432	AD1-067 E	0.5332
934721	AD1-100 C	23.4816
934722	AD1-100 E	109.5808
936291	AD2-038 C O1	2.2754
936292	AD2-038 E O1	15.2278

© PJM Interconnection 2020. All rights reserved

Bus #	Bus	MW Impact
936371	AD2-047 C O1	4.5144
936372	AD2-047 E O1	22.0408
937001	AD2-134 C	2.6399
937002	AD2-134 E	10.9055
937211	AD2-159 C	2.9439
937212	AD2-159 E	13.7826
938851	AE1-113 C O1	8.4830
938852	AE1-113 E O1	26.6674
938861	AE1-114 C O1	3.4693
938862	AE1-114 E O1	13.2635
939321	AE1-163 C O1	5.7177
939322	AE1-163 E O1	35.1231
939401	AE1-172 C	6.4222
939402	AE1-172 E	30.1326
939641	AE1-194 C	5.9561
939642	AE1-194 E	39.8599
939651	AE1-195 C	5.9561
939652	AE1-195 E	39.8599
939732	AE1-204 E	0.6666
990901	L-005 E	6.1215

13 Queue Dependencies

The Queue Projects below are listed in one or more indices for the overloads identified in your report. These projects contribute to the loading of the overloaded facilities identified in your report. The percent overload of a facility and cost allocation you may have towards a particular reinforcement could vary depending on the action of these earlier projects. The status of each project at the time of the analysis is presented in the table. This list may change as earlier projects withdraw or modify their requests.

Queue Number		Project Name	Status
N-015		N/A	N/A
AC2-177		Desoto-Tanners Creek 345kV	Active
AE1-210		Desoto 345 kV	Active
AC2-104		Marysville-Sorenson 765kv	Withdrawn
W4-005		Blue Mound-Latham	Partially in Service - Under Construction
W4-005		Blue Mound-Latham	Partially in Service - Under Construction
GSG-6		N/A	N/A
S-071		N/A	N/A
S-071		N/A	N/A
AB2-028		Fall Creek-Desoto 345kV	Active
AC2-176		Jay 138 kV	Under Construction
AE1-113		Mole Creek 345 kV	Active
AC1-168		Kewanee-Streator	Active
P-010		N/A	N/A
S-027		N/A	N/A
05FR-22G		N/A	N/A
AD2-087		Randolf 138kV	Active
AC1-168		Kewanee-Streator	Active

© PJM Interconnection 2020. All rights reserved

Queue Number		Project Name	Status
R-030		N/A	N/A
R-030		N/A	N/A
R-030		N/A	N/A
AD2-038		Powerton	Active
05MDL-1G		N/A	N/A
AD1-064		White Rock-Wayne 345kV	Withdrawn
AB2-070		Brokaw-Lanesville	Active
O-029		N/A	N/A
GSG-6		N/A	N/A
AC2-176		Jay 138 kV	Under Construction
AD2-047		Davis Creek 138 kV	Active
AA2-039		Kewanee 138 kV	Active
AA2-039		Kewanee 138 kV	Active
AA1-018		Powerton-Goodings Grove	Under Construction
AC2-080		Olive-Reynolds 345kV	Active
AA1-018		Powerton-Goodings Grove	Under Construction
AC2-140		DC Cook Unit 2	Active
T-127		N/A	N/A
AC2-140		DC Cook Unit 2	Active
AC2-104		Marysville-Sorenson 765kv	Withdrawn
AA2-123		Marengo 34kV	In Service
AD2-131		Latham Kincaid	Active
AC1-171		Powerton	Active
AE1-163		Powerton-Goodings Grove 345 kV	Active
AC1-033		Kewanee	Active
AC1-214		Crescent Ridge	Active
AC1-033		Kewanee	Active
O-029		N/A	N/A
V3-007		Desoto-Tanners Creek #1 345kV	Under Construction
V3-007		Desoto-Tanners Creek #1 345kV	Under Construction
AD2-159		Chestnut 345kV	Active
R-030		N/A	N/A
R-030		N/A	N/A
R-030		N/A	N/A
AD2-159		Chestnut 345kV	Active
AD1-148		Brokaw-Lanesville	Active
AE1-210		Desoto 345 kV	Active
AC1-171		Powerton	Active
X2-022		Brokaw-Lanesville	Partially in Service - Under Construction
AC1-053		Lanesville-Brokaw	Active
AD1-137		Dequine 345 kV	Active
AB2-047		Brokaw-Pontiac Midpoint	Active
O-009		N/A	N/A
O-009		N/A	N/A
O-009		N/A	N/A
AC2-080		Olive-Reynolds 345kV	Active
AD2-091		Hardin Tap 345kV	Active
AD2-096		Marysville 345kV	Active
AE1-204		Waukegan 13 kV	Active
05FR-12G		N/A	N/A
AD1-104		Marysville-Sorenson 765 kV II	Active
AD1-104		Marysville-Sorenson 765 kV II	Active

© PJM Interconnection 2020. All rights reserved

Queue Number		Project Name	Status
05FR-11G		N/A	N/A
Z2-087		Pontiac MidPoint-Brokaw 345kV	Under Construction
Z2-087		Pontiac MidPoint-Brokaw 345kV	Under Construction
S-028		N/A	N/A
AB2-191		Mendota Hills	In Service
AD2-038		Powerton	Active
AB2-191		Mendota Hills	In Service
AC1-053		Lanesville-Brokaw	Active
AD2-134		Shady Oaks	Active
AD2-134		Shady Oaks	Active
AE1-195		Crete 345 kV	Active
AD1-064		White Rock-Wayne 345kV	Withdrawn
AE1-195		Crete 345 kV	Active
AB2-028		Fall Creek-Desoto 345kV	Active
05MDL-4G		N/A	N/A
AB2-047		Brokaw-Pontiac Midpoint	Active
05MDL-4G		N/A	N/A
05MDL-1G		N/A	N/A
AC1-173		Logtown 138kV	Under Construction
05MDL-3G		N/A	N/A
05FR-3G		N/A	N/A
05FR-3G		N/A	N/A
Z1-072		Crescent Ridge	In Service
AC1-173		Logtown 138kV	Under Construction
AE1-114		Maryland-Lancaster 138 kV	Active
AE1-172		Loretto-Wilton Center	Active
AA2-148		Madison-Tanners Creek 138kV	Active
AE1-114		Maryland-Lancaster 138 kV	Active
AE1-172		Loretto-Wilton Center	Active
O-009		N/A	N/A
O-009		N/A	N/A
O-009		N/A	N/A
AD1-100		Wilton Center-Loretto	Active
AD1-100		Wilton Center-Loretto	Active
05MDL-3G		N/A	N/A
AC2-177		Desoto-Tanners Creek 345kV	Active
AD2-138		Olive-Reynolds 345kV	Active
AD2-138		Olive-Reynolds 345kV	Active
O-035		N/A	N/A
05FR-4G		N/A	N/A
AE1-113		Mole Creek 345 kV	Active
AE1-194		Crete 345 kV	Active
05FR-21G		N/A	N/A
05FR-21G		N/A	N/A
L-005		N/A	N/A
AD2-047		Davis Creek 138 kV	Active
AA2-148		Madison-Tanners Creek 138kV	Active
AD1-137		Dequine 345 kV	Active
AE1-194		Crete 345 kV	Active
05FR-4G		N/A	N/A
AE1-163		Powerton-Goodings Grove 345 kV	Active
05FR-12G		N/A	N/A

© PJM Interconnection 2020. All rights reserved

Queue Number		Project Name	Status
AD1-067		Mendota Hills	Active
AD1-067		Mendota Hills	Active
AC1-214		Crescent Ridge	Active
Z1-073		Mendota Hills	In Service
AD2-087		Randolf 138kV	Active
AB2-070		Brokaw-Lanesville	Active
AC1-176		Timber Switch 138kV	Active
05MDL-2G		N/A	N/A
T-131		N/A	N/A
05MDL-2G		N/A	N/A
T-131		N/A	N/A
AC1-176		Timber Switch 138kV	Active
P-046		N/A	N/A

13.1 Contingency Descriptions

Contingency Name	Contingency Definition
AEP_P1-2_#695A	CONTINGENCY 'AEP_P1-2_#695A' OPEN BRANCH FROM BUS 243206 TO BUS 270644 CKT 1 / 243206 05DUMONT 765 270644 WILTON ; 765 1 END
COMED_P4_112-65-BT4-5__	CONTINGENCY 'COMED_P4_112-65-BT4-5__' TRIP BRANCH FROM BUS 270644 TO BUS 243206 CKT 1 / WILTO; 765 05DUMONT 765 TRIP BRANCH FROM BUS 275233 TO BUS 270644 CKT 1 / WILTO;4M 345 WILTO; 765 TRIP BRANCH FROM BUS 275233 TO BUS 270927 CKT 1 / WILTO;4M 345 WILTO; R 345 TRIP BRANCH FROM BUS 275233 TO BUS 275333 CKT 1 / WILTO;4M 345 WILTO;4C 33 END
COMED_P4_112-65-BT2-3__	CONTINGENCY 'COMED_P4_112-65-BT2-3__' TRIP BRANCH FROM BUS 270644 TO BUS 270607 CKT 1 / WILTO; 765 COLLI; 765 TRIP BRANCH FROM BUS 275232 TO BUS 270644 CKT 1 / WILTO;3M 345 WILTO; 765 TRIP BRANCH FROM BUS 275232 TO BUS 270926 CKT 1 / WILTO;3M 345 WILTO; B 345 TRIP BRANCH FROM BUS 275232 TO BUS 275332 CKT 1 / WILTO;3M 345 WILTO;3C 33 END
AEP_P1-2_#7441-A	CONTINGENCY 'AEP_P1-2_#7441-A' OPEN BRANCH FROM BUS 242928 TO BUS 932800 CKT 1 / 242928 05MARYSV 765 932800 AC2-104 TAP 765 1 END
AEP_P1-2_#7441-B	CONTINGENCY 'AEP_P1-2_#7441-B' OPEN BRANCH FROM BUS 932800 TO BUS 246999 CKT 1 / 932800 AC2-104 TAP 765 246999 05SORENS 765 1 END

© PJM Interconnection 2020. All rights reserved

Contingency Name	Contingency Definition
COMED_P4_112-65-BT5-6__	CONTINGENCY 'COMED_P4_112-65-BT5-6__' TRIP BRANCH FROM BUS 270644 TO BUS 270607 CKT 1 / WILTO; 765 COLLI; 765 TRIP BRANCH FROM BUS 275233 TO BUS 270644 CKT 1 / WILTO;4M 345 WILTO; 765 TRIP BRANCH FROM BUS 275233 TO BUS 270927 CKT 1 / WILTO;4M 345 WILTO; R 345 TRIP BRANCH FROM BUS 275233 TO BUS 275333 CKT 1 / WILTO;4M 345 WILTO;4C 33 END
AEP_P4_#2978_05DUMONT 765_B	CONTINGENCY 'AEP_P4_#2978_05DUMONT 765_B' OPEN BRANCH FROM BUS 243206 TO BUS 243207 CKT 1 / 243206 05DUMONT 765 243207 05GRNTWN 765 1 OPEN BRANCH FROM BUS 243206 TO BUS 270644 CKT 1 / 243206 05DUMONT 765 270644 WILTON ; 765 1 END
AEP_P4_#7445_05MARYSV 765_B	CONTINGENCY 'AEP_P4_#7445_05MARYSV 765_B' OPEN BRANCH FROM BUS 242922 TO BUS 242928 CKT 1 / 242922 05FLTLCK 765 242928 05MARYSV 765 1 OPEN BRANCH FROM BUS 242928 TO BUS 932800 CKT 1 / 242928 05MARYSV 765 932800 AC2-104 TAP 765 1 /* CONTINGENCY LINE ADDED FOR AE1 BUILD END

14 Short Circuit Analysis

The following breakers are overdutied:

None

14.1 System Reinforcements - Short Circuit

None

15 Stability and Reactive Power

To be completed during the Facilities Study phase.

16 Affected Systems

16.1 LG&E

None

16.2 MISO

MISO performed a Preliminary Affected System Study which identified MISO impacts due to the AE1-113 project. MISO will retool the Affected System Study in 2021. For additional details, refer to the MISO Preliminary Affected System Study Report.

16.3 TVA

None

© PJM Interconnection 2020. All rights reserved

16.4 Duke Energy Progress

None

16.5 NYISO

None

© PJM Interconnection 2020. All rights reserved

17 Attachment 1: One Line Diagram

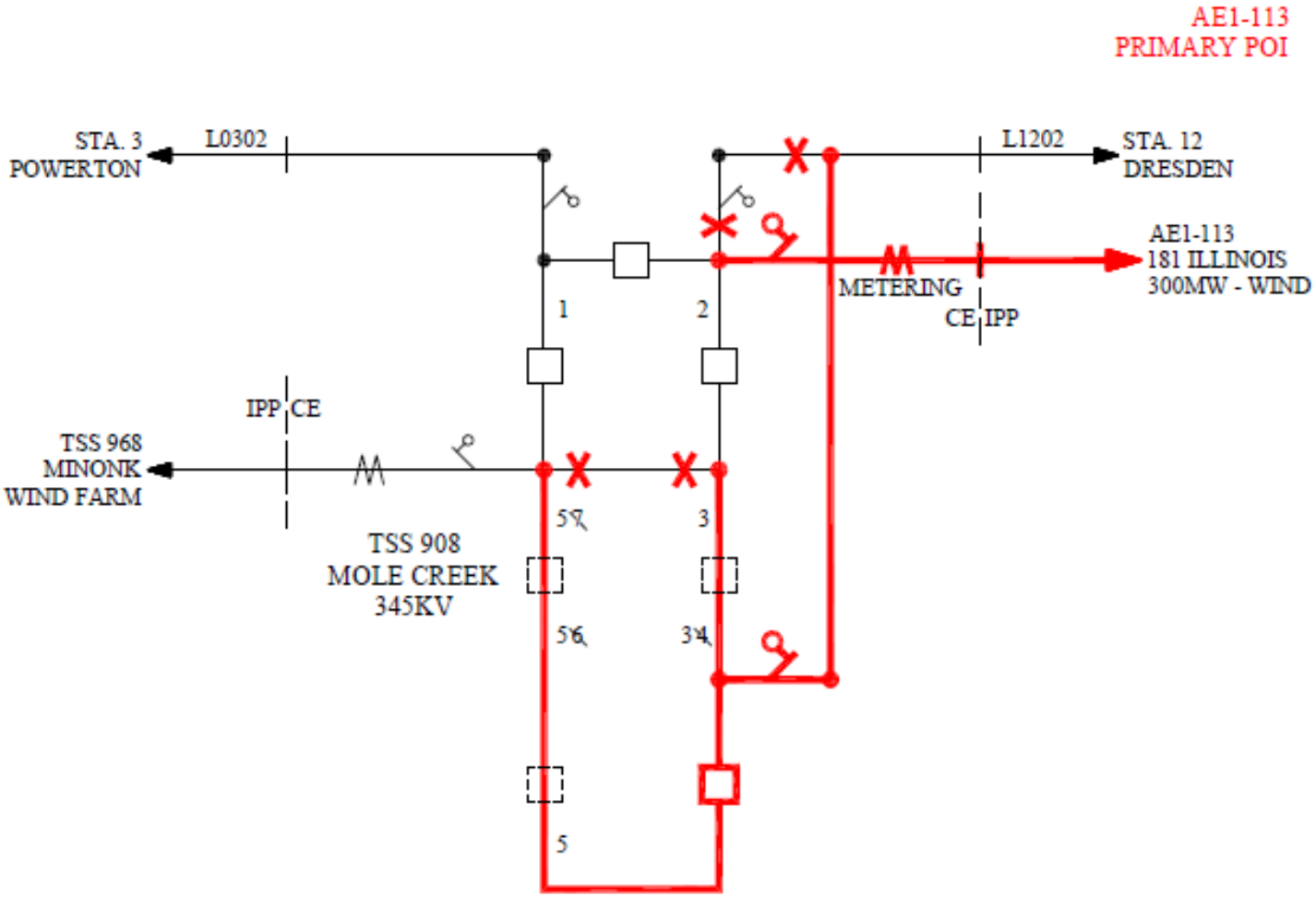

© PJM Interconnection 2020. All rights reserved