Lawrencium 101 : HPC on Lawrencium Supercluster

Sapana Soni

HPCS User support team

Outline

1. Lawrencium supercluster Overview
2. Access/login to clusters
3. Software access and installation
4. Job submission and monitoring
5. Data transfer to/from clusters
6. Open On Demand: a browser based HPCS portal

Lawrencium Cluster Overview

- A LBNL Condo Cluster Computing Program
  - Support researchers in all disciplines at the Lab
  - Significant investment by the IT division
  - Individual PIs buy in compute nodes and storage
  - Computational cycles are shared among all lawrencium users
- Lawrencium Compute Nodes
  - data center is housed in the building 50B
  - 1238 CPU Compute nodes, more than 37,192 cores
  - 152 GPU cards
  - 8 partitions, lr3, lr4, lr5,lr6, es1, cm1
  - ~1300 user accounts
  - ~530 groups
- Standalone Clusters

Conceptual Diagram of Lawrencium

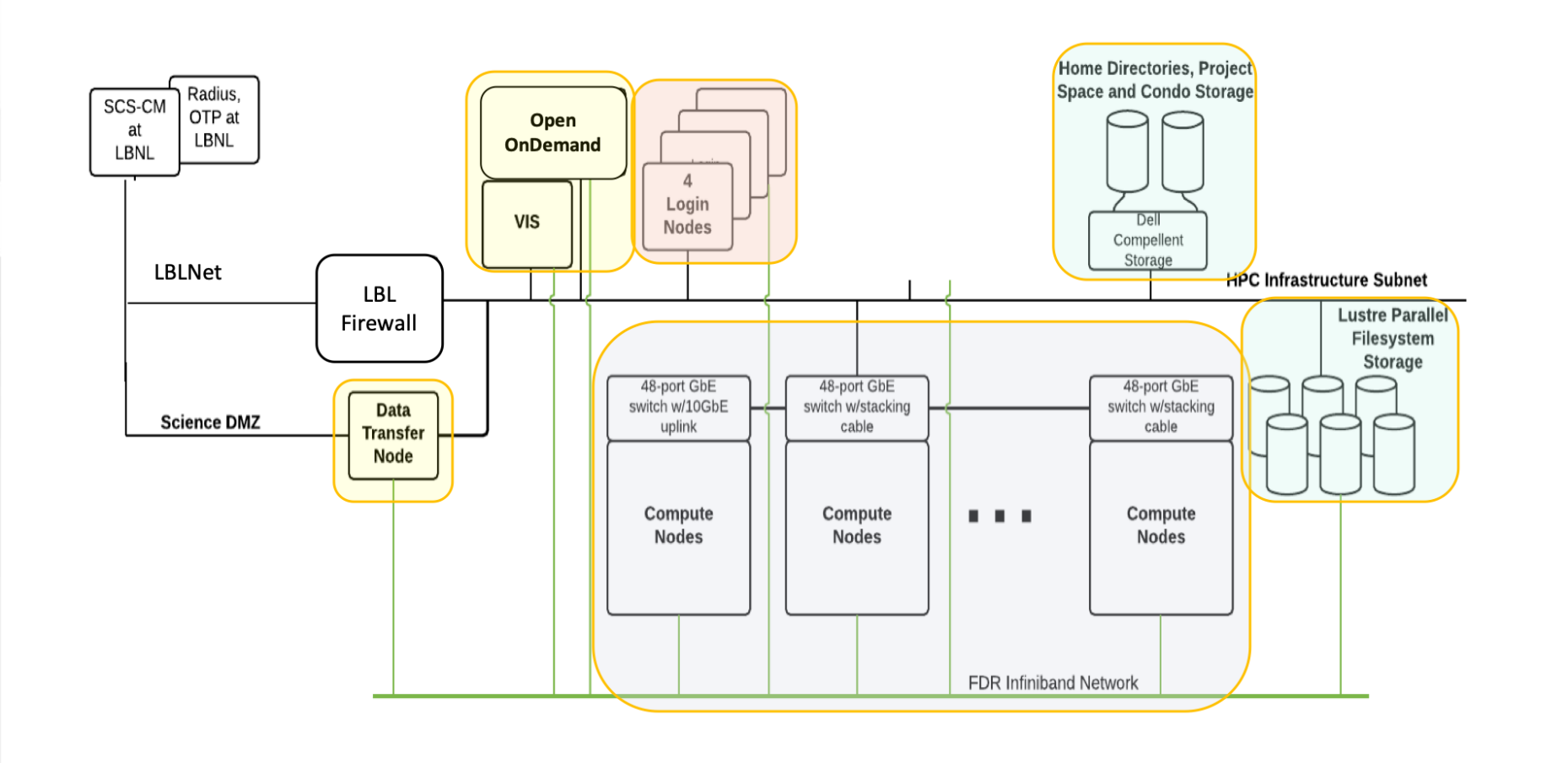

[Detailed Information of Lawrencium]

Getting Access to Lawrencium

Project Accounts

- Three types of project accounts can be requested.
  1. *Primary Investigator (PI) Computing Allowance (PCA) account*: free 300K SUs per year (pc_xxx)
  2. *Condo account*: PIs buy in compute nodes to be added to the general pool, in exchange for their own priority access and share the Lawrencium infrastructure (lr_xxx)
  3. *Recharge account*: pay as you go with minimal recharge rate ~ $0.01/SU (ac_xxx)
- Check out more details here. Project Accounts
- LBL affiliated PI can request project accout at MyLRC portal
- PIs can grant access researchers/students and external collaborators to their PCA/Condo/Recharge Projects.

Getting Access to Lawrencium

User Accounts

- PIs can sponsor researchers/students and external collaborators for cluster accounts
- Account requests and approval will happen through MyLRC portal.
  - Account creation request
  - PI approval
  - Account creation
  - Users are notified upon account availability and OTP setup.
- Detailed documentation will be published soon. Stay tuned!!

Login to Lawrencium Cluster

- Linux: Terminal (command-line) session.
- Mac: Terminal (see Applications -> Utilities -> Terminal).
- Windows: PowerShell, or PuTTY or MobaXterm.
- One-time passwords (OTPs): set up Google Authenticator app on your smartphone or tablet Instructions Here
- Login:

```
ssh $USER@lrc-login.lbl.gov
password:
```

- Password: your 4-digit PIN followed by 6-digit one-time password from your Google Authenticator. Example PIN: 0123 OTP: 456789.
  `password:0123456789`
  Note: No characters will appear on the screen in the password prompt when you enter in the digits.

- **DO NOT run jobs on login nodes!!**

User Space

- Home: `/global/home/users/$USER/` 20GB per user, data is backed up, recommended for keeping scripts and final results data
- Global Scratch: `/global/scratch/$USER/`, shared, no backup, recommended for launching jobs
- Shared group project space
  - /global/home/groups-sw/ 200GB backup
  - /global/home/group/ 400GB no backup
- Condo Storage:
  - `e.g. /clusterfs/etna/ or /global/scratch/projects/xxx`

Data Transfer

lrc-xfer.lbl.gov: Data Transfer Node (DTN)

- On Linux: scp/rsync

```
# Transfer data from a local machine to Lawrencium
scp file-xxx $USER@lrc-xfer.lbl.gov:/global/home/users/$USER
scp -r dir-xxx $USER@lrc-xfer.lbl.gov:/global/scratch/$USER

# Transfer from Lawrencium to a local machine
scp $USER@lrc-xfer.lbl.gov:/global/scratch/$USER/file-xxx ~/Desktop

# Transfer from Lawrencium to Another Institute
ssh $USER@lrc-xfer.lbl.gov   # DTN
scp -r $USER@lrc-xfer.lbl.gov:/file-on-lawrencium $USER@other-institute:/destination/path/$USER

rsync: a better data transfer tool as a backup tool
rsync -avpz file-at-local $USER@lrc-xfer.lbl.gov:/global/home/user/$USER
```

- On Window
  - WinSCP: SFTP client and FTP client for Microsoft Windows
  - FileZella: multi-platform program via SFTP

Data Transfer with Globus

- Globus can be used for fast data transfer and sharing with collaborators: Click for [Instuctions]
- Berkeley Lab users can use Globus to transfer files in/out of their LBNL Google drive. Details about Google Drive via Globus is [Here]
- Possible endpoints include: lbnl#lrc, ucb#brc, your laptop/desktop, NERSC.
- Transfer data to/from your laptop (endpoint setup)
    - Create an endpoint on your machine using Globus Connect Personal [globus-connect-personal]
    - Run Globus Connect Pesonal on your local machine

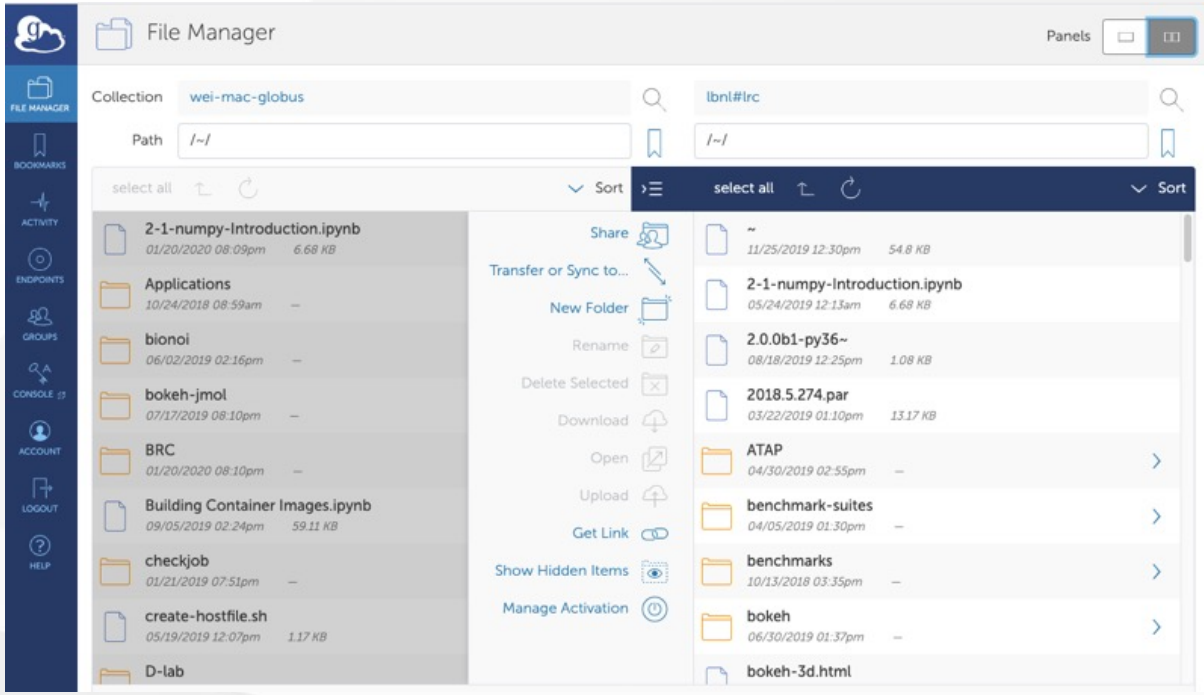

Software Module Farm

- Software stack, commonly used compiler, software tools provided to all cluster users
- Installed and maintained on a centralized storage device and mounted as read-only NFS file system
  - Compilers: e.g. intel, gcc, MPI compilers, Python
  - Tools: e.g.matlab, singularity, cuda
  - Applications: e.g. machine learning, QChem, MD, cp2k
  - Libraries: e.g. fftw, lapack

```
[@n0000.scs00 ~]$ module avail
---- /global/software/sl-7.x86_64/modfiles/langs ----
gcc/6.3.0  intel/2016.4.072  python/2.7 python/3.5 cuda/9.0 julia/0.5.0 ...

---- /global/software/sl-7.x86_64/modfiles/tools ----
cmake/3.7.2  gnuplot/5.0.5  octave/4.2.0 matlab/r2017b(default)  ...

---- /global/software/sl-7.x86_64/modfiles/apps ----
bio/blast/2.6.0 math/octave/current ml/tensorflow/2.5.0-py37 ...
...
```

Environment Modules

- Manages users' software environment by dynamically setting up $PATH, $LD_LIBRARY_PATH...
- Avoid clashes between incompatible software versions

```
module purge: clear user's work environment
module available: check available software packages
module load xxx*: load a package
module list: check currently loaded software
```

- Modules are arranged in a hierarchical fashion, some of the modules become available only after the parent module(s) are loaded
- e.g., MKL, FFT, and HDF5/NetCDF software is nested within the gcc module
- Example: load an OpenMPI package

```
module available openmpi mkl
module load intel/2016.4.072
module av openmpi
module load mkl/2016.4.072 openmpi/3.0.1-intel
```

Environment Modules

- Want to learn more about the Environment Modules? Click here
- Users are allowed to install software in their home or group space. All group memebers can access packages installed in group space.
- Users don't have admin rights, but most software can be installed at custom path using `--prefix=/dir/to/your/path`

Installing Python Packages

- Python modules: abundantly available but cannot be installed in the default location without admin rights.
- `pip install --user package_name`
- `export PYTHONPATH`

```
[wfeinstein@n0000 ~]$ module load python/3.7

[wfeinstein@n0000 ~]$ python3 -m site --user-site
/global/home/users/wfeinstein/.local/lib/python3.7/site-packages

[wfeinstein@n0000 ~]$ pip install --user ml-python
...
Successfully built ml-python
Installing collected packages: ml-python
Successfully installed ml-python-2.2

[wfeinstein@n0000 ~]$ export PYTHONPATH=~/.local/lib/python3.7/site-packages:$PYTHONPATH
```

Installing Python Packages

- pip install: `--install-option="--prefix=$HOME/.local" package_name`
- Install from source code: `python setup.py install –home=/home/user/package_dir`
- Creat a virtual environmemt: `python -m venv my_env`
- Isolated Python environment: `python`
- Activate environment:

SLURM: Resource Manager & Job Scheduler

SLURM is the resource manager and job scheduler to managing all the jobs on the cluster

Why is this necessary?

- Prevent users' jobs running on the same nodes.
- Allow everyone to fairly share Lawrencium resources.

Basic workflow:

- login to Lawrencium; you'll end up on one of the login nodes in your home directory
- cd to the directory from which you want to submit the job (scratch recomended)
- submit the job using sbatch or an interactive job using srun (discussed later)
- SLURM assign compute node(s) to your jobs
- your jobs will run on a compute node, not the login node

Slurm-Related Environment Variables

- Slurm provides global variables
- Can be used in your job submission scripts to adapt the resources being requested in order to avoid hard-code
- Examples of Slurm variables
  - SLURM_WORKDIR
  - SLURM_NTASKS
  - SLURM_CPUS_PER_TASK
  - SLURM_CPUS_ON_NODE
  - SLURM_NODELIST
  - SLURM_NNODES

Accounts, Partitions, Quality of Service (QOS)

Check slurm association, such as qos, account, partition, the information is required when submitting a job

```
sacctmgr show association user=wfeinstein -p

Cluster|Account|User|Partition|Share|Priority|GrpJobs|GrpTRES|GrpSubmit|GrpWall|GrpTRESMins|MaxJobs|MaxTRES|MaxTRESPerNode|MaxSubmit|MaxWall|MaxTRESMins|QOS|Def QOS|GrpTRESRunMins|
perceus-00|pc_scs|wfeinstein|lr6|1||||||||||||lr_debug,lr_lowprio,lr_normal|||
perceus-00|ac_test|wfeinstein|lr5|1||||||||||||lr_debug,lr_lowprio,lr_normal|||
perceus-00|pc_test|wfeinstein|lr4|1||||||||||||lr_debug,lr_lowprio,lr_normal|||
perceus-00|pc_test|wfeinstein|lr_bigmem|1||||||||||||lr_debug,lr_lowprio,lr_normal|||
perceus-00|lr_test|wfeinstein|lr3|1||||||||||||condo_test|||
perceus-00|scs|wfeinstein|es1|1||||||||||||es_debug,es_lowprio,es_normal|||
...
```

Lawrencium Cluster Info Click [Here]

Job Submission: Interactive Job

Interactive job submission is typically used for code debugging, testing, monitoring.

- srun: add your resource request to the queue.
- When the allocation starts, a new bash session will start up on one of the granted nodes
- `srun --account=ac_xxx --nodes=1 --partition=lr5 --qos=lr_normal --time=1:0:0 --pty bash`
- `srun -A ac_xxx -N 1 -p lr5 -q lr_normal -t 1:0:0 --pty bash`

```
[wfeinstein@n0003 ~]$ srun --account=scs --nodes=1 --partition=lr6 --time=1:0:0 --qos=lr_normal --pty bash
srun: Granted job allocation 28755918
srun: Waiting for resource configuration
srun: Nodes n0101.lr6 are ready for job
[wfeinstein@n0101 ~]$ squeue -u wfeinstein
             JOBID PARTITION     NAME     USER ST       TIME  NODES NODELIST(REASON)
          28755918       lr6     bash wfeinste  R       0:14      1 n0101.lr6
```

Once you are on the assigned compute node, start application/commands directly

- salloc: similarly to *srun --pty bash*.
- a new bash session will start up on the login node

Node Features

Compute nodes may have different hardware within a SLURM partition, e.g. LR6 - lr6_sky: Intel Skylak, lr6_cas: Intel Cascade Lake, lr6_cas,lr6_m192: lr6_cas + 192GB RAM, lr6_sky,lr6_m192: lr6_sky + 192GB RAM

- Lawrencium nodes features can be found here.
- When a specific type of node is requsted, wait time typically is longer
- Slurm flag: --constrain

```
[wfeinstein@n0000 ~]$ srun --account=scs --nodes=1 --partition=lr6 --time=1:0:0 --qos=lr_normal --constrain=lr6_sky --pty bash
[wfeinstein@n0081 ~]$ free -h
              total        used        free      shared  buff/cache   available
Mem:            93G        2.2G         83G        3.1G        7.4G         87G
Swap:          8.0G          0B        8.0G
[wfeinstein@n0081 ~]$ exit
exit
[wfeinstein@n0000 ~]$ srun --account=scs --nodes=1 --partition=lr6 --time=1:0:0 --qos=lr_normal --constrain=lr6_sky,lr6_m192 --pty bash
[wfeinstein@n0023 ~]$ free -h
              total        used        free      shared  buff/cache   available
Mem:           187G        2.6G        172G        1.7G         12G        182G
Swap:          8.0G        1.5G        6.5G
```

Memory Specification

- Most Lawrencium partitions are exclusive: a compute node allows only one user
- Some condo accounts or partitions, such as ES1 (GPUs), each compute node can be shared by multiple users
- Slurm flag: --mem (MB) is required when using a shared partition:
- e.g. a compute node with 96GB RAM, 40 core node: 2300 RAM/core
  - `--ntask=1 --mem=2300` (request one core)
  - `--ntask=2 --mem=4600` (request 2 cores)
- LR6 partition lr_bigmem: two large memory nodes (1.5TB)
- Slurm flag: --partition=lr_bigmem

Submit a Batch Job

- Get help with the complete command options `sbatch --help`
- sbatch: submit a job to the batch queue system `sbatch myjob.sh`

```
#!/bin/bash -l
# Job name:
#SBATCH --job-name=mytest
# Partition:
#SBATCH --partition=lr6
# Account:
#SBATCH --account=pc_test
# qos:
#SBATCH --qos=lr_normal
# Wall clock time:
#SBATCH --time=1:00:00
# Node count
#SBATCH --nodes=1
#SBATCH --constrain=lr6_cas
#SBATCH --mail-user=xxx@lbl.gov
##SBATCH --mail-type=BEGIN/END/FAIL
#SBATCH --mail-type=ALL
# cd to your work directory
cd /your/dir
## Commands to run
module load python/3.7
python my.py >& mypy.out
```

Submit Jobs to ES1 GPU Partition

- `--gres=gpu:type:GPU#`
- `--ntasks=CPU_CORE#`
- ratio CPU_CORE#:GPU# = 2:1

```
srun -A your_acct -N 1 -p es1 --gres=gpu:1 --ntasks=2 -q es_normal –t 0:30:0 --pty bash

[wfeinstein@n0000 ~]$ srun -A scs -N 1 -p es1 --gres=gpu:1 --ntasks=2 -q es_normal -t 0:30:0 --pty bash
[wfeinstein@n0019 ~]$ nvidia-smi
Sat Feb  6 10:13:25 2021
+-----------------------------------------------------------------------------+
| NVIDIA-SMI 440.44       Driver Version: 440.44       CUDA Version: 10.2     |
|-------------------------------+----------------------+----------------------+
| GPU  Name        Persistence-M| Bus-Id        Disp.A | Volatile Uncorr. ECC |
| Fan  Temp  Perf  Pwr:Usage/Cap|         Memory-Usage | GPU-Util  Compute M. |
|===============================+======================+======================|
|   0  Tesla V100-SXM2...  Off  | 00000000:62:00.0 Off |                    0 |
| N/A   45C    P0    53W / 300W |      0MiB / 16160MiB |      0%      Default |
+-------------------------------+----------------------+----------------------+
|   1  Tesla V100-SXM2...  Off  | 00000000:89:00.0 Off |                    0 |
| N/A   45C    P0    55W / 300W |      0MiB / 16160MiB |      0%      Default |
+-------------------------------+----------------------+----------------------+
+-----------------------------------------------------------------------------+
| Processes:                                                       GPU Memory |
|  GPU       PID   Type   Process name                             Usage      |
|=============================================================================|
|  No running processes found                                                 |
+-----------------------------------------------------------------------------+
```

- Specify GPU type
  - GTX1080TI: --gres=gpu:GTX1080TI:1 (decommissioned)
  - GRTX2080TI: --gres=gpu:GRTX2080TI:1
  - V00: --gres=gpu:V100:1
  - A40: (6 2U A40 coming up)

```
[wfeinstein@n0000 ~]$ srun -A scs -N 1 -p es1 --gres=gpu:V100:2 --ntasks=4 -q es_normal -t 0:30:0 --pty bash

[wfeinstein@n0016 ~]$ nvidia-smi -L
GPU 0: Tesla V100-SXM2-16GB (UUID: GPU-7979861e-e0ad-000f-95fb-371e34593991)
GPU 1: Tesla V100-SXM2-16GB (UUID: GPU-50d24ac9-9eea-f96b-cc8b-db849f9c9427)

[wfeinstein@n0016 ~]$ echo $CUDA_VISIBLE_DEVICES
0,1
```

Submit A GPU Batch Job

Job Submission Script Example

```
#!/bin/bash -l

#SBATCH --job-name=mytest
#SBATCH --partition=es1          ## es1 GPU partition
#SBATCH --account=pc_test
#SBATCH --qos=es_normal          ## qos of es1
#SBATCH --time=1:00:00
#SBATCH --nodes=1
#SBATCH --gres=gpu:V100:2        ## GPUs
#SBATCH --ntasks=4               ## CPU cores
#
cd /your/dir

## Commands to run
module load python/3.7
python my.py >& mypy.out
```

Submiting MPI Jobs

When using multiple nodes, you need to carefully specify the resources. The key flags to use in your job script are:

- --nodes (or -N): number of nodes
- --ntasks-per-node: number of tasks (i.e., processes) to run on each node, especially useful when your job uses large memory, < Max Core# on a node
- --ntasks (or -n): total number of tasks and let the scheduler determine how many nodes and tasks per node are needed.
- *NOTE:* `--cpus-per-task` does not behave correctly at this time. Please refrain from using it until further notice.

Submiting MPI Jobs

Job submission script

```
#!/bin/bash -l

#SBATCH --job-name=myMPI
#SBATCH --partition=lr6
#SBATCH --account=scs
#SBATCH --qos=lr_normal
#SBATCH --time=2:00:00
#SBATCH --nodes=2                ## Nodes count
##SBATCH --ntasks=40             ## Number of total MPI tasks to launch (example):
##SBATCH --ntasks-per-node=20    ## important with large memory requirement

cd /your/dir

## Commands to run
module load intel/2016.4.072 openmpi/3.0.1-intel
mpirun -np 40 ./my_mpi_exe        ## Launch your MPI application
```

Submit Serial Tasks in Parallel (GNU Parallel)

GNU Parallel is a shell tool for executing jobs in parallel on one or multiple computers.

- A job can be a single core serial task, multi-core or MPI application.
- A job can also be a command that reads from a pipe.
- Typical input:
  - bash script for a single task
  - a list of tasks with parameters
- Example Using GNU Parallel

  Bioinformatics tool *blastp* to compare 200 target protein sequences against sequence DB
  Serial bash script: **run-blast.sh**

```
#!/bin/bash
module load  bio/blast/2.6.0
blastp -query $1 -db ../blast/db/img_v400_PROT.00 -out $2  -outfmt 7 -max_target_seqs 10 -num_threads 1
```

task.lst: each line provides one parameter to one task:

```
[user@n0002 ]$ cat task.lst
 ../blast/data/protein1.faa
 ../blast/data/protein2.faa
 ...
 ../blast/data/protein200.faa
```

Instead submit single core-jobs 200 times, which potentially need 200 nodes, GNU parallel sends single-core jobs in parallel using all the cores available, e.g. 2 compute nodes 32*2=64 parallel tasks. Once a CPU core becomes available, another job will be sent to this resource.

```
module load parallel/20200222
JOBS_PER_NODE=32
parallel --jobs $JOBS_PER_NODE --slf hostfile --wd $WDIR --joblog task.log --resume --progress \
                -a task.lst sh run-blast.sh {} output/{/.}.blst
```

Detailed information of how to submit serial tasks in parallel with GNU Parallel

Monitoring Jobs

- sinfo: check node status of a partition (idle, allocated, drain, down)

```
[wfeinstein@n0000 ~]$ sinfo -r -p lr5
PARTITION AVAIL  TIMELIMIT  NODES  STATE NODELIST
lr5          up   infinite      3 drain* n0004.lr5,n0032.lr5,n0169.lr5
lr5          up   infinite     14   down n0048.lr5,n0050.lr5
lr5          up   infinite     58  alloc n0000.lr5,n0001.lr5,n0002.lr5,n0003.lr5,n0006.lr5,n0009.lr5
lr5          up   infinite    115   idle n0005.lr5,n0007.lr5,n0008.lr5
...
```

- squeue: check job status in the batch queuing system (R or PD)

```
squeue -u $USER
             JOBID PARTITION     NAME     USER ST       TIME  NODES NODELIST(REASON)
          28757187       lr6     bash wfeinste  R       0:09      1 n0215.lr6
          28757723       es1     bash wfeinste  R       0:16      1 n0002.es1
          28759191       lr6     bash wfeinste PD       0:00    120 (QOSMaxNodePerJobLimit)
```

- sacct: check job information or history

```
[wfeinstein@n0002 ~]$ sacct -j 28757723
       JobID    JobName  Partition    Account  AllocCPUS      State ExitCode
------------ ---------- ---------- ---------- ---------- ---------- --------
28757723           bash        es1        scs          2    RUNNING      0:0

[wfeinstein@n0002 ~]$ sacct -X -o 'jobid,user,partition,nodelist,stat'
       JobID      User  Partition        NodeList      State
------------ --------- ---------- --------------- ----------
28755594     wfeinste+        lr5       n0192.lr5  COMPLETED
28755597     wfeinste+        lr6       n0101.lr6  COMPLETED
28755598     wfeinste+        lr5       n0192.lr5  COMPLETED
28755604     wfeinste+ csd_lr6_s+       n0144.lr6  COMPLETED
28755693     wfeinste+        lr6       n0101.lr6 CANCELLED+
....
28757187     wfeinste+        lr6       n0215.lr6  COMPLETED
28757386     wfeinste+        es1       n0019.es1     FAILED
28757389     wfeinste+        es1       n0002.es1    TIMEOUT
28757723     wfeinste+        es1       n0002.es1    RUNNING
```

- `wwall -j <JOB_ID>` : check resouce utilization of an active job from a login node

```
[wfeinstein@n0000 ~]$ wwall -j 28757187
--------------------------------------------------------------------------------
Total CPU utilization: 0%
          Total Nodes: 1
               Living: 1                            Warewulf
          Unavailable: 0                      Cluster Statistics
             Disabled: 0                 http://warewulf.lbl.gov/
                Error: 0
                 Dead: 0
--------------------------------------------------------------------------------
 Node       Cluster        CPU        Memory (MB)       Swap (MB)       Current
 Name        Name       [util/num] [% used/total]    [% used/total]    Status
n0215.lr6                 0%   (40) % 3473/192058     % 1655/8191       READY
```

- `scancel <jobID>` : scancel a job

More Information of [Slurm Usage]

Open OnDemand

- OpenOnDemand is a web platform that provides an easy access to the cluster's HPC resourses and services.
- Designed and developed by Ohio Supercomputer Center.
- Intuitive and easy access to computing resourses, alternative and convenient way to traditional command line access
- Allow access to Lawrencium compute resources
  - File browser: file editing, data transfer
  - Shell command line access - terminal
  - Job monitoring
- Interactive applications: Jupyter Server, RStudio Server, MATLAB, Desktop
- Sever: https://lrc-ondemand.lbl.gov/
  - Intel Xeon Gold processor with 32 cores, 96 GB RAM

Accessing OOD on Lawrencium

1. Web link to connect : https://lrc-ondemand.lbl.gov/
   Note: Use Chrome or Firefox to browse this page. Safari has known authentication issues.

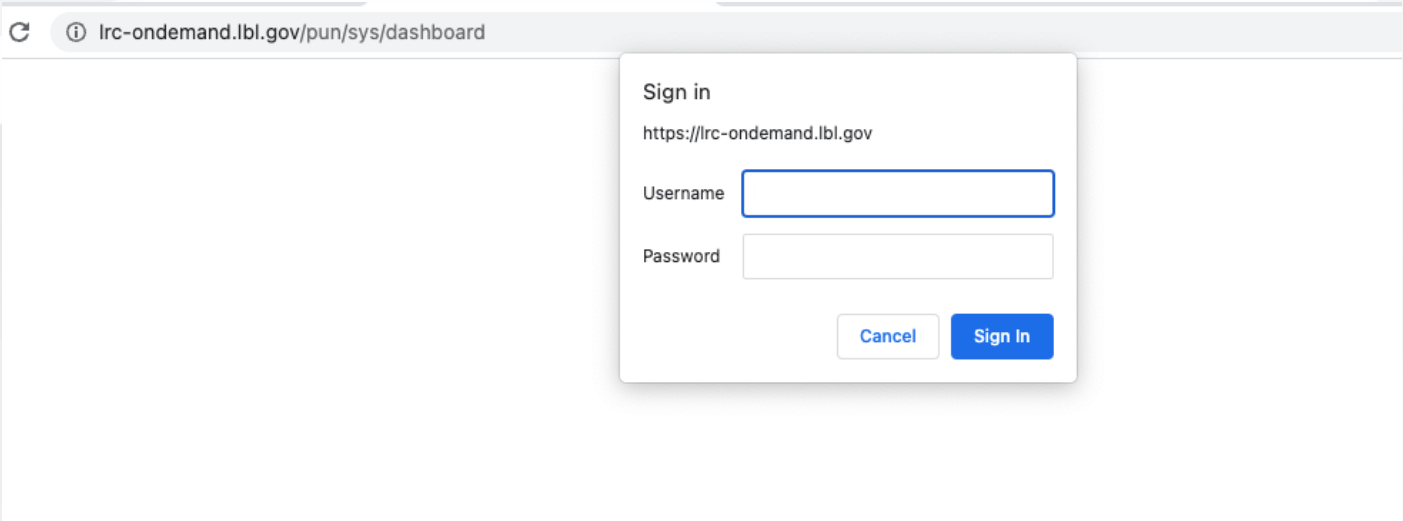

2. Use your LRC username and PIN+one-time password (OTP)
   - same credentials you use to login Lawrencium cluster

OOD Dashboard on Lawrencium

On successful authentication you will see a OOD dashboard.

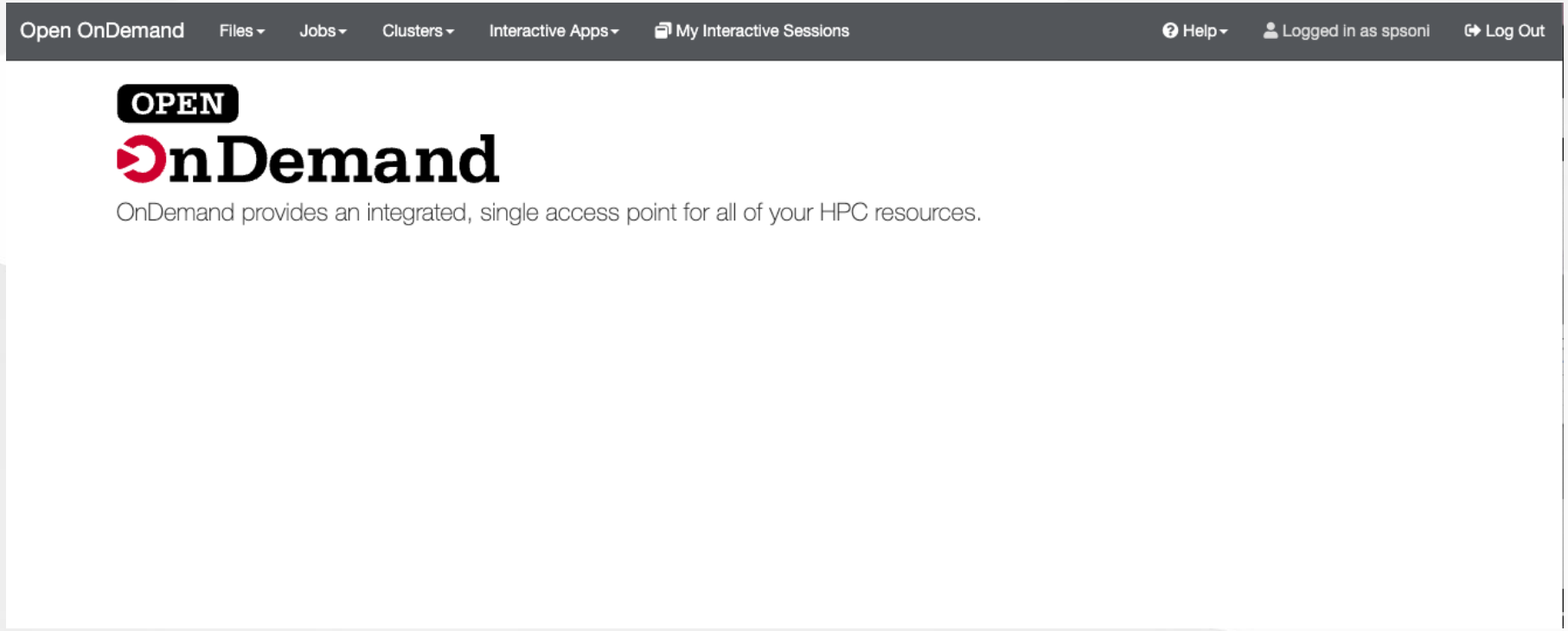

Lets do quick demo!
Detailed training materials can be found on github.

Remote Visulization

- Allow users to run a real desktop within the cluster environment
- Allow applications with a GUI, commercial applications, debugger or visualization applications to render results.
  - Remote Desktop launched within Open OnDemand - **coming up, stay tuned**
  - viz node lrc-viz.lbl.gov
  - RealVNC is provided as the remote desktop service with local VNC Viewer
  - Start VNC service on viz node lrc-viz.lbl.gov
  - Connect to the VNC server with VNC Viewer locally
  - Start applications: Firefox, Jupyter notebooks, paraview ...

Getting help

- Virtual office hours:
  - Time: 10.30 am to noon every Wednesday
  - Online request
- Send us tickets at hpcshelp@lbl.gov
- More information about LBNL Supercluster and scientic computing services can be found here.

Your feedback is important to us for improving HPC services and training.
Please fill out training survey