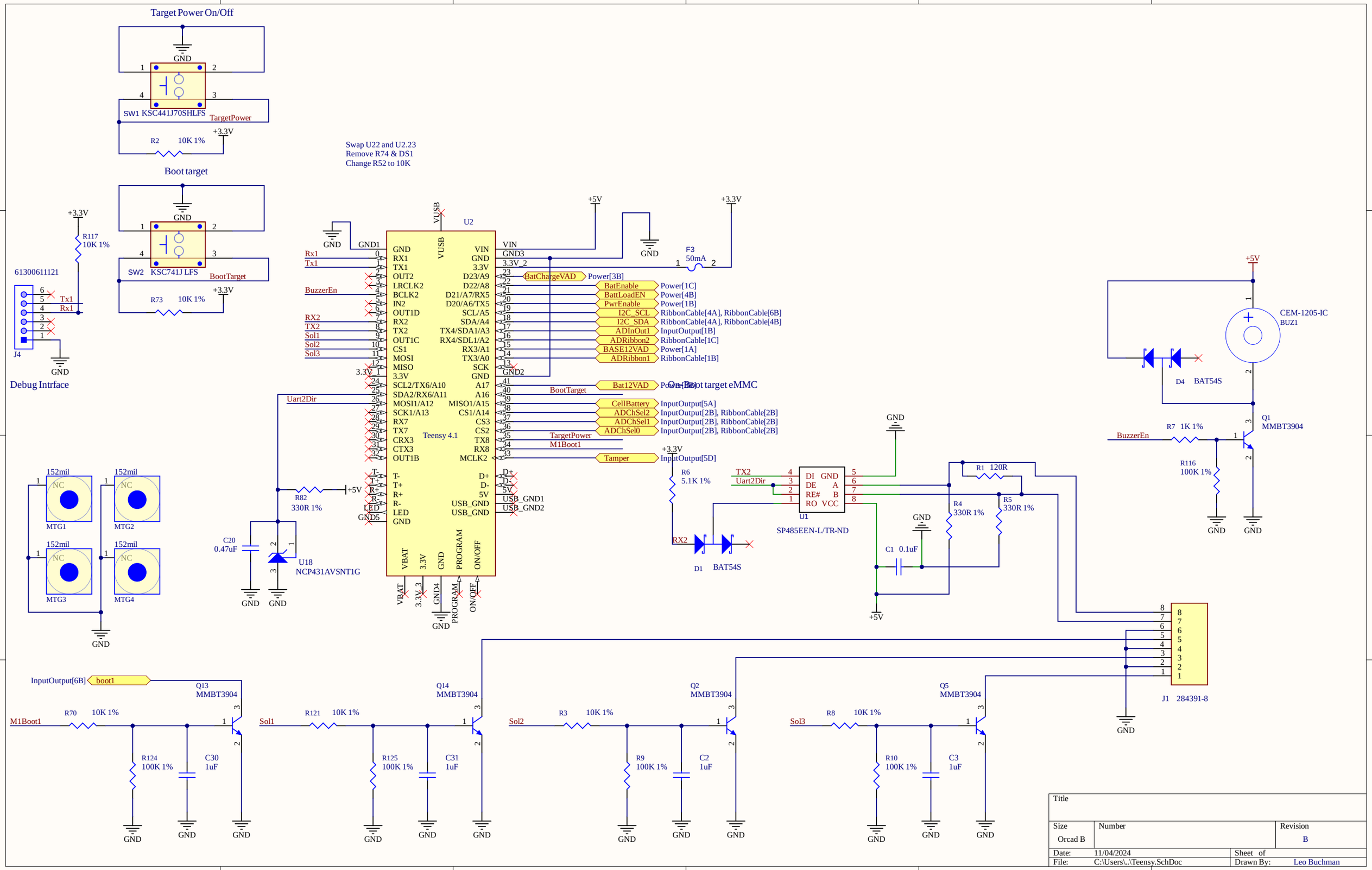
Target Power On/Off
SW1 KSC441J70SHLFS
TargetPower
R2 10K 1%
Boot target
SW2 KSC741J LFS
BootTarget
R73 10K 1%
Swap U22 and U2.23
Remove R74 & DS1
Change R52 to 10K
U2
Teensy 4.1
Debug Intrface
J4
61300611121
R117 10K 1%
MTG1
MTG2
MTG3
MTG4
152mil
NC
R82 330R 1%
C20 0.47uF
U18 NCP431AVSNT1G
R6 5.1K 1%
D1 BAT54S
U1
SP485EEN-L/TR-ND
R1 120R
R4 330R 1%
R5 330R 1%
C1 0.1uF
F3 50mA
CEM-1205-IC
BUZ1
D4 BAT54S
Q1 MMBT3904
R7 1K 1%
R116 100K 1%
J1 284391-8
Q13 MMBT3904
R70 10K 1%
R124 100K 1%
C30 1uF
Q14 MMBT3904
R121 10K 1%
R125 100K 1%
C31 1uF
Q2 MMBT3904
R3 10K 1%
R9 100K 1%
C2 1uF
Q5 MMBT3904
R8 10K 1%
R10 100K 1%
C3 1uF
Title
Size Orcad B
Number
Revision B
Date: 11/04/2024
Sheet of
File: C:\Users\..\Teensy.SchDoc
Drawn By: Leo Buchman

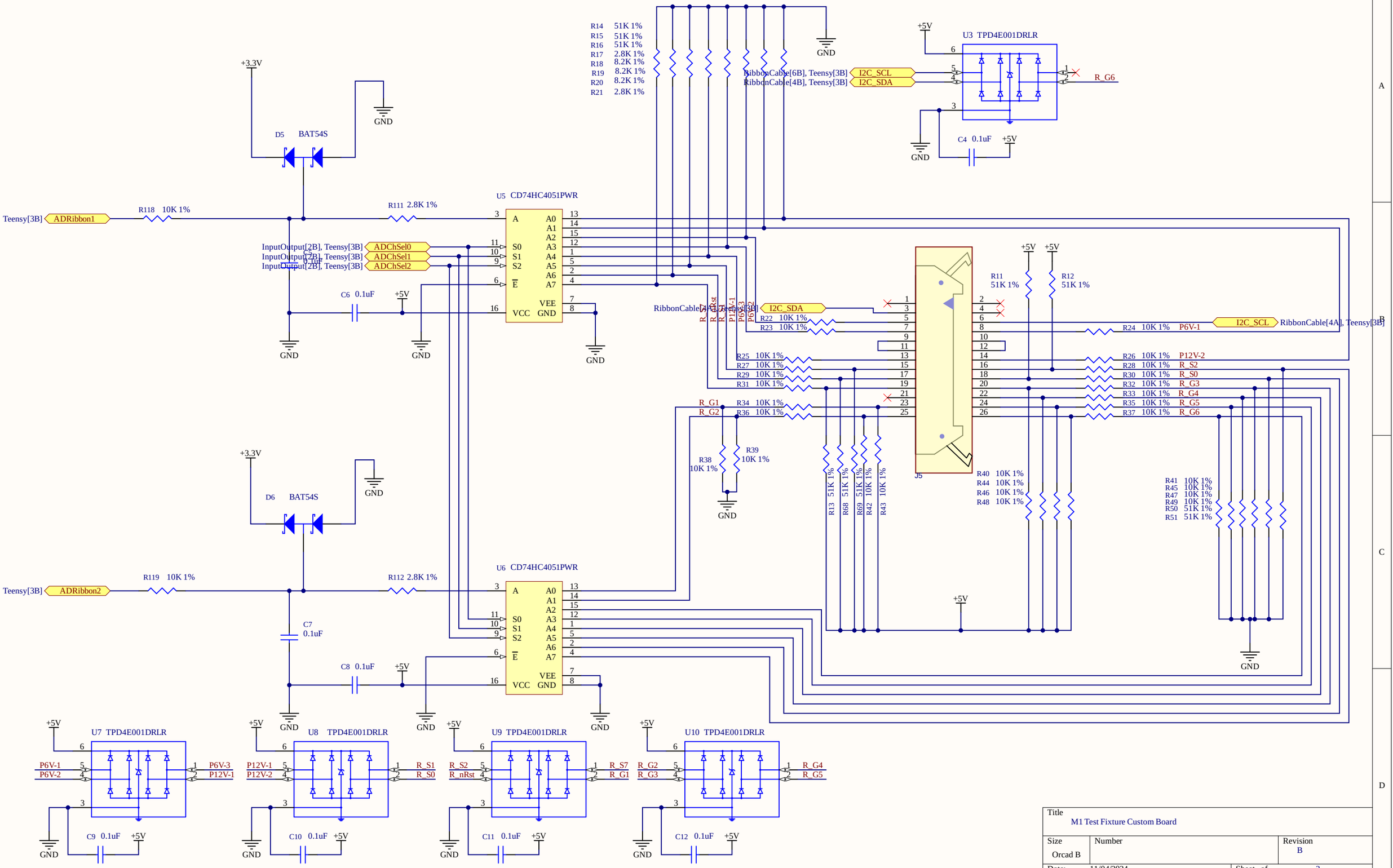

Title: M1 Test Fixture Custom Board		
Size: Orcad B	Number	Revision: B
Date: 11/04/2024		Sheet of 2
File: C:\Users\..\RibbonCable.SchDoc		Drawn By: Leo Buchman

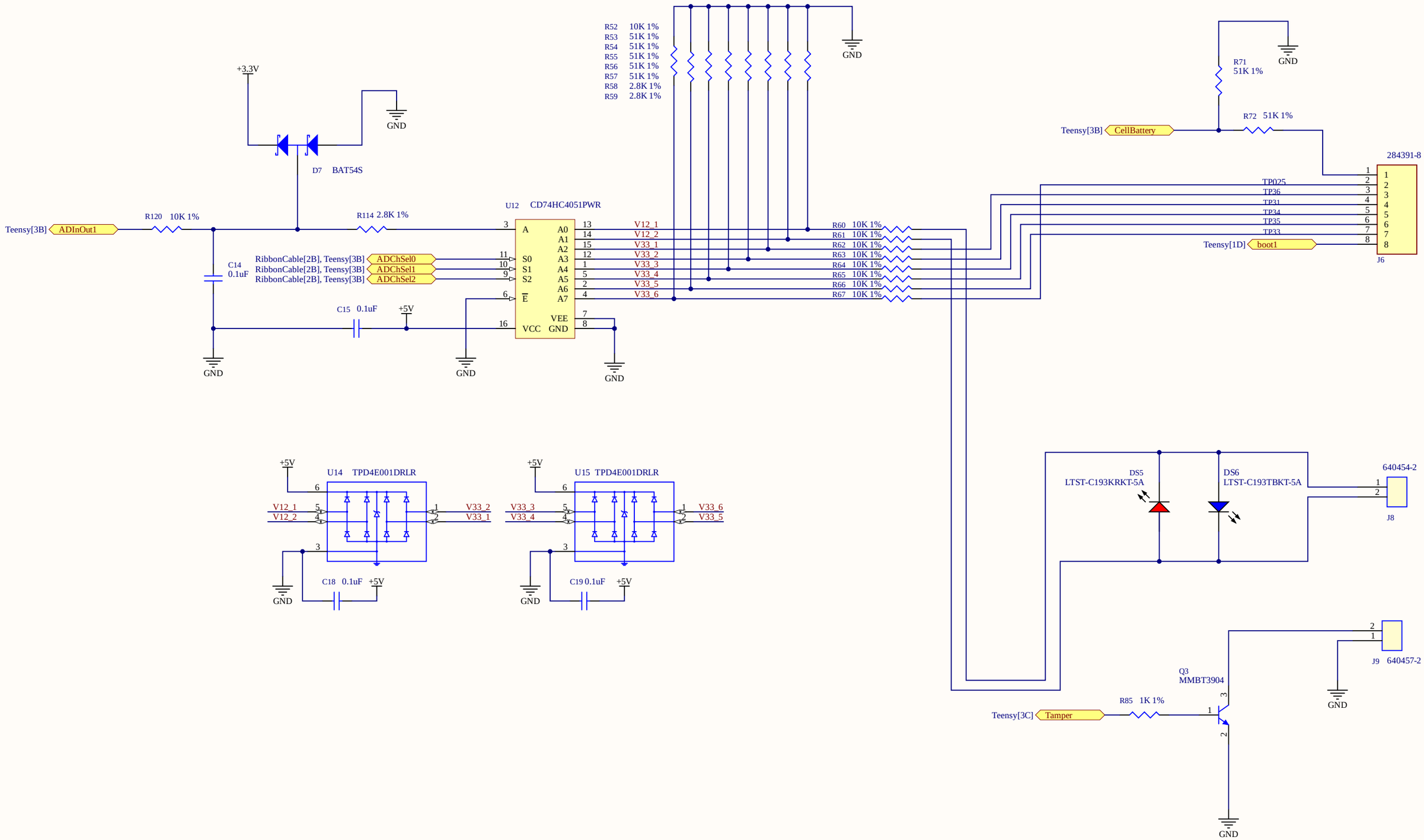

Title M1 Test Fixture Custom Board		
Size Orcad B	Number	Revision B
Date: 11/04/2024		Sheet of 3
File: C:\Users\..\InputOutput.SchDoc		Drawn By: Leo Buchman

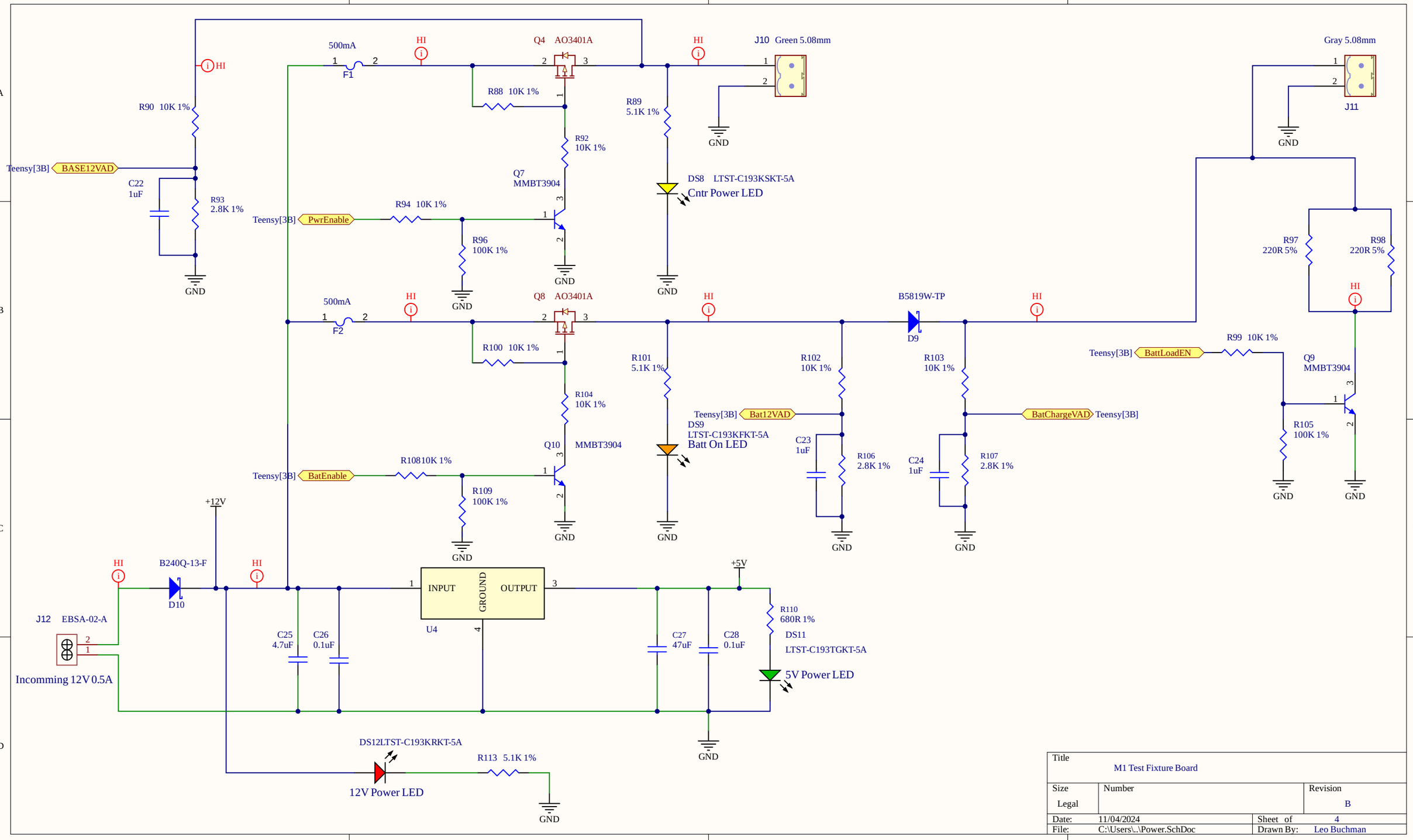

Title	M1 Test Fixture Board	
Size: Legal	Number	Revision: B
Date: 11/04/2024	Sheet of 4	
File: C:\Users\..\Power.SchDoc	Drawn By: Leo Buchman	

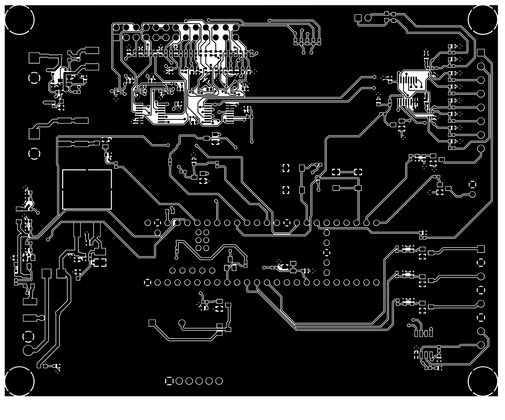

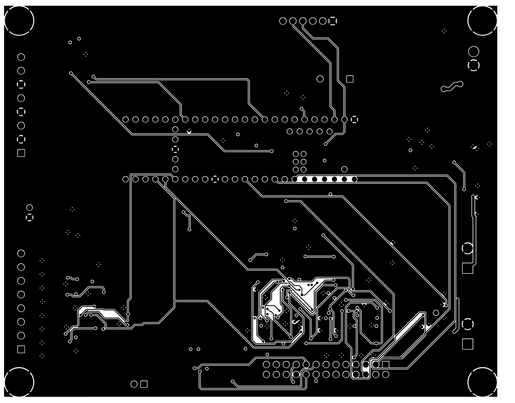

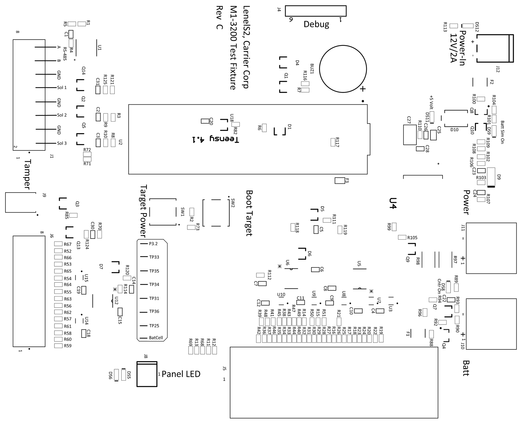
LevelS2, Carrier Corp
M1-3200 Test Fixture
Rev C
Power-In
12V/2A
Power
Batt
Debug
Teensy 4.1
U4
Boot Target
Target Power
Panel LED
Tamper

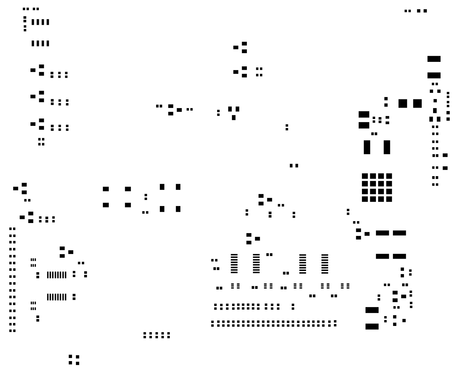

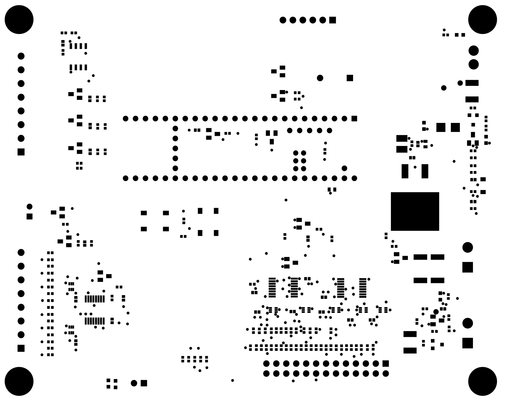

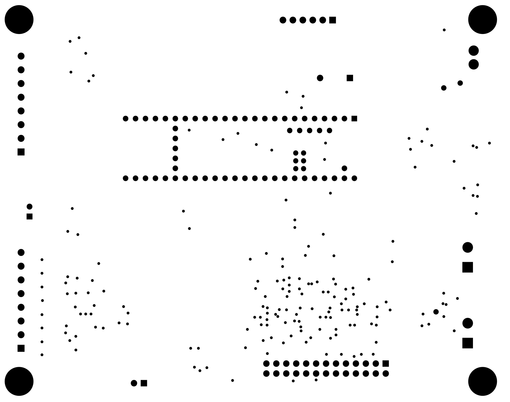

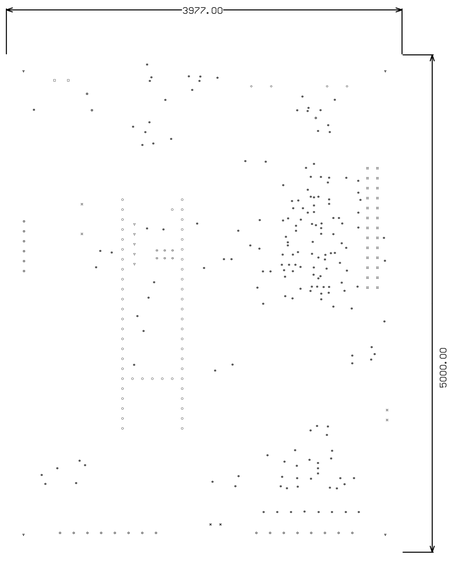

Layer	Name	Material	Thickness	Constant	Board Layer Stack
	Silkscreen Top				
	Solder Mask Top	Solder Resist	1.00mil	3.2	
	Top Surface Plating	Lead-Free	1.40mil		
1	Top		0.70mil		
	Dielectric 1	2 x 2116	9.10mil	4.3	
2	GND Layer 2		0.70mil		
	Dielectric2	Core	39.00mil	4.6	
3	Power Layer 3		0.70mil		
	Dielectric3	2 x 2116	9.10mil	4.3	
4	Bottom		0.70mil		
	Bottom Surface Finish	Lead-Free	1.40mil		
	Solder Mask Bottom	Solder Resist	1.00mil	3.2	
	Silkscreen Bottom				

Notes:

1. LATEST VERSION OF ALL REFERENCED SPECIFICATIONS TO BE USED UNLESS OTHERWISE SPECIFIED.
2. FABRICATE IN ACCORDANCE WITH IPC-6012B, CLASS 2 UNLESS OTHERWISE SPECIFIED.
3. INSPECT IN ACCORDANCE WITH IPC-6012B, CLASS 2 UNLESS OTHERWISE SPECIFIED.
4. MATERIAL:
   HIGH TEMP FR4 (OR EQUIVALENT FOR ROHS COMPLIANCE).
   FLAME RETARDENT, IN ACCORDANCE WITH UL STANDARD 796.
   FINISHED BOARD MUST MEET UL94V-0.
5. SILKSCREEN NOMENCLATURE NOT TO COVER ANY PORTION OF A COMPONENT PAD. FABRICATOR TO CLIP ANY NON-CONFORMING SILKSCREEN NOMENCLATURE. DO NOT REMOVE SILKSCREEN FROM TENTED VIAS. SILKSCREEN COLOR: WHITE.
6. USE LPI SOLDER MASK OVER BARE COPPER PER IPC-SM-840C, CLASS 2. SOLDERMASK COLOR: BLUE.
7. GLOBAL AND LOCAL FIDUCIALS MUST BE FREE OF ANY MARKINGS.
8. REMOVAL OF NON-FUNCTIONAL PADS ON INNER LAYERS ALLOWED.
9. THEIVING OF OUTER LAYERS IS ACCEPTABLE AS LONG AS THE COPPER IS KEPT A MININMUM OF 0.200" FROM ANY DESIGN FEATURE.
10. PRIOR TO BOARD FABRICATION, COMPARE GERBER DATA TO SUPPLIED IPC-D-356A NETLIST. REPORT ALL DISCREPANCIES.
11. ENTIRE BOARD TO BE IMMERSION GOLD PLATED. 2 TO 5 MICROINCHES OVER 100 MICROINCHES MINIMUM OF ELECTROLESS NICKEL.
12. BOARD TO BE ROHS COMPATIBLE.
13. ANY CHANGES TO THE SUPPLIED GERBER DATA TO BE APPROVED BY S2 SECURITY.

Rev A - Initial
Rev B - Added BJT Q11 & Q12 to control boot target

Symbol	Count	Hole Size	Plated	Hole Type	Drill Layer Pair	Via/Pad	Pad Shape	Template	Description	Hole Tolerance (+)	Hole Tolerance (-)
	2	40.16mil (1.020mm)	PTH	Round	Top - Bottom	Pad	(Mixed)	(Mixed)			
	2	62.99mil (1.600mm)	PTH	Round	Top - Bottom	Pad	Rounded	c250h160			
	3	28.00mil (0.711mm)	PTH	Round	Top - Bottom	Via	Rounded	v127h71			
	4	40.00mil (1.016mm)	PTH	Round	Top - Bottom	Pad	(Mixed)	(Mixed)			
	4	55.00mil (1.397mm)	PTH	Round	Top - Bottom	Pad	(Mixed)	(Mixed)		3.00mil (0.076mm)	3.00mil (0.076mm)
	4	152.00mil (3.861mm)	PTH	Round	Top - Bottom	Pad	Rounded	c724h386z508			
	5	29.53mil (0.750mm)	PTH	Round	Top - Bottom	Pad	Rounded	c126h75			
	6	27.56mil (0.700mm)	PTH	Round	Top - Bottom	Pad	Rounded	c121h70			
	22	43.31mil (1.100mm)	PTH	Round	Top - Bottom	Pad	(Mixed)	(Mixed)			
	26	35.04mil (0.890mm)	PTH	Round	Top - Bottom	Pad	(Mixed)	(Mixed)			
	54	31.50mil (0.800mm)	PTH	Round	Top - Bottom	Pad	(Mixed)	(Mixed)			
	186	12.00mil (0.305mm)	PTH	Round	Top - Bottom	Via	Rounded	v61h30			
	318 Total										

DRAWN: SBS DATE: 06/27/2022
CHECKED: DATE:
CHECKED: DATE:

UNLESS OTHERWISE SPECIFIED:
DIMENSIONS ARE IN INCHES AND APPLY AFTER PROCESSING TOLERANCES
TOLERANCES
.X = +/- .1 .XXX = +/- .005
.XX = +/- .01 ANGLES = +/- 2

REMOVE ALL BURRS AND SHARP EDGES

S2Lenel
ONE SPEEN ST.
FRAMINGHAM, MA 01791

DWG TITLE
M1-3200 Test Board
FABRICATION DRAWING

SIZE B | DWG NO. S2-PC-0000 | Rev B

SCALE: 1/1

NOTES

NOTES

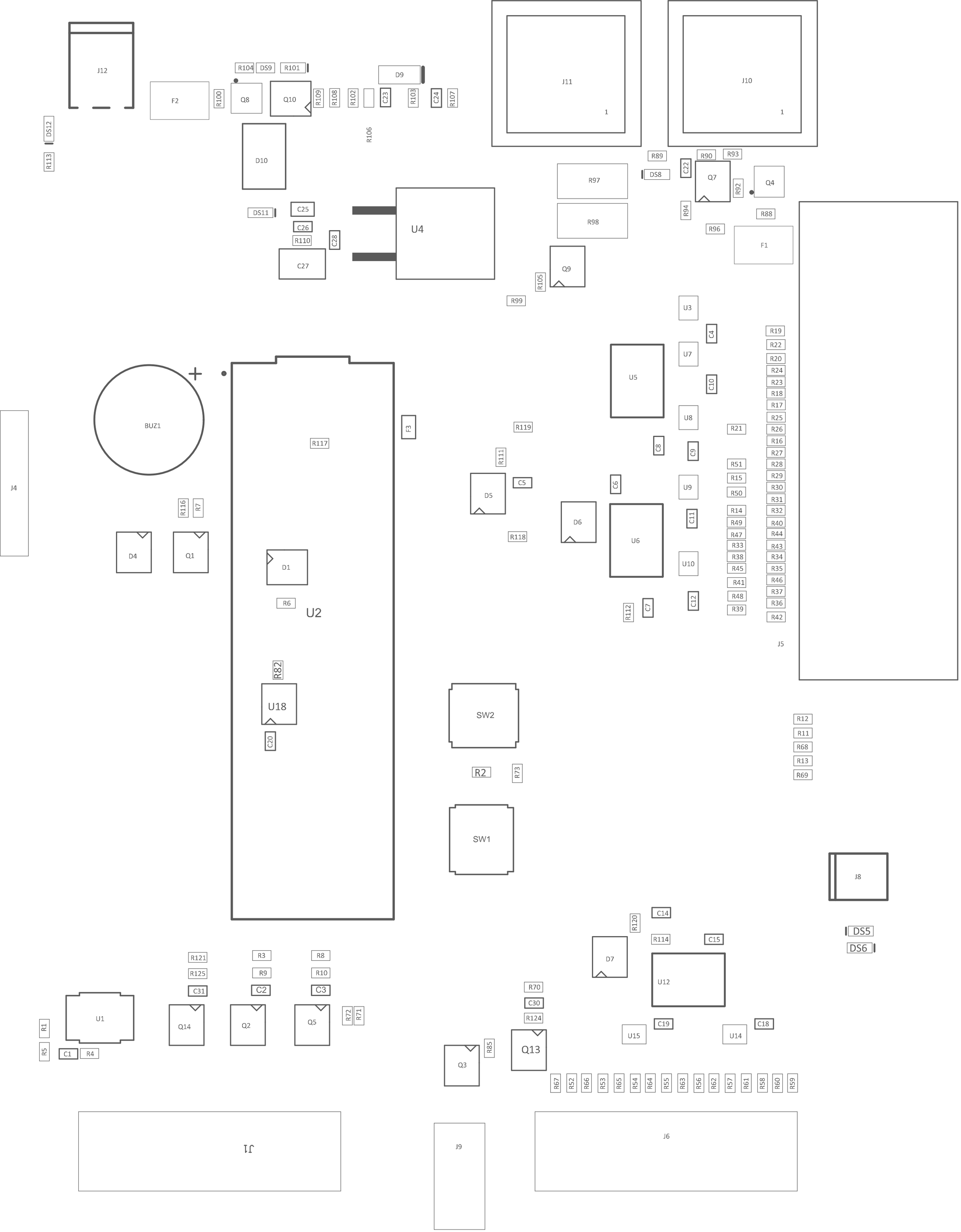
J12
F2
R100
Q8
R104
DS9
R101
Q10
R109
R108
R102
C23
D9
R103
C24
R107
R106
D10
DS12
R113
J11
1
J10
1
R89
R90
R93
C22
Q7
R92
Q4
DS8
R97
R98
R94
R88
R96
F1
DS11
C25
C26
R110
C28
C27
U4
Q9
R105
R99
U3
C4
U7
U5
C10
R19
R22
R20
R24
R23
R18
R17
R25
R26
R16
R27
R28
R29
R30
R31
R32
R40
R44
R43
R34
R35
R46
R37
R36
R42
J5
BUZ1
J4
R117
F3
R119
R111
C5
D5
C8
C9
U8
R21
C6
U9
R51
R15
R50
R14
R49
R47
R33
R38
R45
R41
R48
R39
D6
U6
C11
R118
U10
C12
R112
C7
R116
R7
D4
Q1
D1
R6
U2
R82
U18
C20
SW2
R12
R11
R68
R13
R69
R2
R73
SW1
J8
DS5
DS6
C14
R120
R114
C15
D7
U12
R121
R125
C31
R3
R9
C2
R8
R10
C3
R70
C30
R124
U1
R1
R5
C1
R4
Q14
Q2
Q5
R72
R71
Q13
C19
U15
U14
C18
Q3
R85
R67
R52
R66
R53
R65
R54
R64
R55
R63
R56
R62
R57
R61
R58
R60
R59
J1
J9
J6

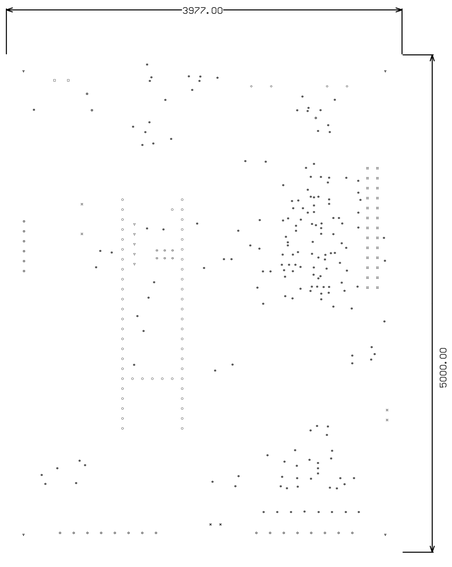

Layer	Name	Material	Thickness	Constant	Board Layer Stack
	Silkscreen Top				
	Solder Mask Top	Solder Resist	1.00mil	3.2	
	Top Surface Plating	Lead-Free	1.40mil		
1	Top		0.70mil		
	Dielectric 1	2 x 2116	9.10mil	4.3	
2	GND Layer 2		0.70mil		
	Dielectric2	Core	39.00mil	4.6	
3	Power Layer 3		0.70mil		
	Dielectric3	2 x 2116	9.10mil	4.3	
4	Bottom		0.70mil		
	Bottom Surface Finish	Lead-Free	1.40mil		
	Solder Mask Bottom	Solder Resist	1.00mil	3.2	
	Silkscreen Bottom				

Notes:

1. LATEST VERSION OF ALL REFERENCED SPECIFICATIONS TO BE USED UNLESS OTHERWISE SPECIFIED.
2. FABRICATE IN ACCORDANCE WITH IPC-6012B, CLASS 2 UNLESS OTHERWISE SPECIFIED.
3. INSPECT IN ACCORDANCE WITH IPC-6012B, CLASS 2 UNLESS OTHERWISE SPECIFIED.
4. MATERIAL:
   HIGH TEMP FR4 (OR EQUIVALENT FOR ROHS COMPLIANCE).
   FLAME RETARDENT, IN ACCORDANCE WITH UL STANDARD 796.
   FINISHED BOARD MUST MEET UL94V-0.
5. SILKSCREEN NOMENCLATURE NOT TO COVER ANY PORTION OF A COMPONENT PAD. FABRICATOR TO CLIP ANY NON-CONFORMING SILKSCREEN NOMENCLATURE. DO NOT REMOVE SILKSCREEN FROM TENTED VIAS. SILKSCREEN COLOR: WHITE.
6. USE LPI SOLDER MASK OVER BARE COPPER PER IPC-SM-840C, CLASS 2. SOLDERMASK COLOR: BLUE.
7. GLOBAL AND LOCAL FIDUCIALS MUST BE FREE OF ANY MARKINGS.
8. REMOVAL OF NON-FUNCTIONAL PADS ON INNER LAYERS ALLOWED.
9. THEIVING OF OUTER LAYERS IS ACCEPTABLE AS LONG AS THE COPPER IS KEPT A MININMUM OF 0.200" FROM ANY DESIGN FEATURE.
10. PRIOR TO BOARD FABRICATION, COMPARE GERBER DATA TO SUPPLIED IPC-D-356A NETLIST. REPORT ALL DISCREPANCIES.
11. ENTIRE BOARD TO BE IMMERSION GOLD PLATED. 2 TO 5 MICROINCHES OVER 100 MICROINCHES MINIMUM OF ELECTROLESS NICKEL.
12. BOARD TO BE ROHS COMPATIBLE.
13. ANY CHANGES TO THE SUPPLIED GERBER DATA TO BE APPROVED BY S2 SECURITY.

Rev A - Initial
Rev B - Added BJT Q11 & Q12 to control boot target

Symbol	Count	Hole Size	Plated	Hole Type	Drill Layer Pair	Via/Pad	Pad Shape	Template	Description	Hole Tolerance (+)	Hole Tolerance (-)
	2	40.16mil (1.020mm)	PTH	Round	Top - Bottom	Pad	(Mixed)	(Mixed)			
	2	62.99mil (1.600mm)	PTH	Round	Top - Bottom	Pad	Rounded	c250h160			
	3	28.00mil (0.711mm)	PTH	Round	Top - Bottom	Via	Rounded	v127h71			
	4	40.00mil (1.016mm)	PTH	Round	Top - Bottom	Pad	(Mixed)	(Mixed)			
	4	55.00mil (1.397mm)	PTH	Round	Top - Bottom	Pad	(Mixed)	(Mixed)		3.00mil (0.076mm)	3.00mil (0.076mm)
	4	152.00mil (3.861mm)	PTH	Round	Top - Bottom	Pad	Rounded	c724h386z508			
	5	29.53mil (0.750mm)	PTH	Round	Top - Bottom	Pad	Rounded	c126h75			
	6	27.56mil (0.700mm)	PTH	Round	Top - Bottom	Pad	Rounded	c121h70			
	22	43.31mil (1.100mm)	PTH	Round	Top - Bottom	Pad	(Mixed)	(Mixed)			
	26	35.04mil (0.890mm)	PTH	Round	Top - Bottom	Pad	(Mixed)	(Mixed)			
	54	31.50mil (0.800mm)	PTH	Round	Top - Bottom	Pad	(Mixed)	(Mixed)			
	186	12.00mil (0.305mm)	PTH	Round	Top - Bottom	Via	Rounded	v61h30			
	318 Total										

DRAWN: SBS DATE: 06/27/2022
CHECKED: DATE:
CHECKED: DATE:

UNLESS OTHERWISE SPECIFIED:
DIMENSIONS ARE IN INCHES AND APPLY AFTER PROCESSING TOLERANCES
TOLERANCES
.X = +/- .1 .XXX = +/- .005
.XX = +/- .01 ANGLES = +/- 2

REMOVE ALL BURRS AND SHARP EDGES

S2Lenel
ONE SPEEN ST.
FRAMINGHAM, MA 01791

DWG TITLE
M1-3200 Test Board
FABRICATION DRAWING

SIZE B | DWG NO. S2-PC-0000 | Rev B

SCALE: 1/1

NOTES

NOTES

Comment	Description	Designator	Quantity	LCSC Part Number	Manufacturer	Manufacturer Part Number	Supplier 1	Supplier Part Number 1
CEM-1205-IC	12 mm, 5 Vdc, 92 dB, Through Hole, Driving Circuit, Magnetic Audio Indicator Buzzer	BUZ1	1	N/A	CUI Devices	CEM-1205-IC	Mouser	490-CEM1205IC
0.1uF	Cap Ceramic 0.1uF 50V X7R 10% Pad SMD 0402 125C Automotive T/R	C1, C4, C5, C6, C7, C8, C9, C10, C11, C12, C14, C15, C18, C19, C26, C28	16	C307331	Murata	GRT155R71H104KE01D	Digi-Key	490-GRT155R71H104KE01DCT-ND
1uF	CAP CER 1UF 10V Y5V 0402	C2, C3, C22, C23, C24, C30, C31	7	C52923	KEMET	C0402C105Z8VAC7867	Digi-Key	399-14873-1-ND
0.47uF	CAP CER 0.47UF 16V Y5V 0402	C20	1	C527993	Yageo	CC0402ZRY5V7BB474	Digi-Key	311-1735-1-ND
4.7uF	CAP CER 4.7UF 16V X5R 0603	C25	1	C19666	Samsung	CL10A475KO8NNNC	Digi-Key	1276-1784-1-ND
47uF	CAP CER 47UF 16V X5R 1210	C27	1	C77101	Murata	GRM32ER61C476ME15L	Digi-Key	490-3888-1-ND
BAT54S	DIODE SCHOTTKY 30V 150MA SOT23-3	D1, D4, D5, D6, D7	5	C47546	Sangdest Microelectronics	BAT54S	Digi-Key	1655-BAT54SCT-ND
B5819W-TP	DIODE SCHOTTKY 40V 1A SOD323	D9	1	C84354	MCC	B5819W-TP	Digi-Key	5819W-TPMSTR-ND
B240Q-13-F	Rectifier Diode Schottky 40V 2A Automotive 2-Pin SMB T/R	D10	1	C460673	Diodes	B240Q-13-F	Digi-Key	B240Q-13-FDICT-ND
LTST-C193KRKT-5A	LED RED CLEAR 0603 SMD	D55, DS12	2	C2286	Vishay Lite-On	LTST-C193KRKT-5A	Digi-Key	160-1830-1-ND
LTST-C193TBKT-5A	LED Blue CLEAR 0603 SMD	DS6	1	C72041	Vishay Lite-On	LTST-C193TBKT-5A	Digi-Key	160-1827-1-ND
LTST-C193KSKT-5A	LED Yellow CLEAR 0603 SMD	DS8	1	C72038	Vishay Lite-On	LTST-C193KSKT-5A	Digi-Key	160-1831-1-ND
LTST-C193KFKT-5A	LED Orange CLEAR 0603 SMD	DS9	1	C434425	Vishay Lite-On	LTST-C193KFKT-5A	Digi-Key	160-1829-1-ND
LTST-C193TGKT-5A	LED Green CLEAR 0603 SMD	DS11	1	C72043	Vishay Lite-On	LTST-C193TGKT-5A	Digi-Key	160-1832-1-ND
500mA	15VDC 500mA	F1, F2	2	C17313	Bourns	MF-MSMF050-2	Digi-Key	MF-MSMF050-2CT-ND
50mA	Ptc Reset Fuse 15V 50MA 0603	F3	1	C2832197	Littelfuse	FEMTOASMDC005F-2	Digi-Key	F9952CT-ND
284391-8	Conn Terminal Block F 8 POS 3.5mm Solder ST T	J1, J5	2	N/A	TEConnectivity	284391-8	Mouser	571-284391-8
61300611121	CONN HEADER 6 POS 2.54	J4	1	C2833331	Würth Electronics	61300611121	Digi-Key	732-5319-ND
N3429-5202RB	3000 Series; 2.54mm Pitch 26 Way 2 Row Right	J5	1	N/A	3M	N3429-5202RB	Digi-Key	MHR26S-ND
640454-2	Header, Polarized; MTA-100; 2; 250 VAC, Polye	J8	1	C86501	TEConnectivity	640454-2	Digi-Key	A19423-ND
640457-2	MTA-100 HEADER Friction Lock RA 2POS 2.54MM	J9	1	C86507	AMP - TE CONNECTIVITY	640457-2	Digi-Key	A1926-ND
Green 5.08mm	Pluggable Term Blocks BCH-508HS- 2 GN 5.08	J10	1	N/A	Phoenix Contact	5442002	Digi-Key	277-11311-ND
Gray 5.08mm	Pluggable Term Blocks BCH-508HS- 2 GR 5.08	J11	1	N/A	Phoenix Contact	5433668	Digi-Key	277-11218-ND
EBSA-02-A	Conn Header Right angle 3.5 pitch 2P	J12	1	C409115	Adam Equipment	EBSA-02-A	Digi-Key	2057-EBSA-02-A-ND
MMBT3904	Trans GP BJT NPN 60V 0.2A 350mW Automotive 3-Pin SOT-23 T/R	Q1, Q2, Q3, Q5, Q7, Q9, Q10, Q13, Q14	9	C20526	ON Semiconductor / Fairchild	MMBT3904	Newark	58K9431
AO3401A	Mosfet P-channel 30V 4A SOT23-3	Q4, Q8	2	C15127	Alpha & Omega Semiconductor	AO3401AL	Digi-Key	AO3401AL-ND
120R	Res Thick Film 0402 120 Ohm 1% 0.063W(1/16W) ±100ppm/C Pad SMD Automotive T/R	R1	1	C25079	Stackpole Electronics	RMCF0402FT120R	Digi-Key	RMCF0402FT120RCT-ND
10K1%	Thick Film 0402 10K OHM 1% 1/16W 0402	R2, R3, R8, R22, R23, R24, R25, R26, R27, R28, R29, R30, R31, R32, R33, R34, R35, R36, R37, R38, R39, R40, R41, R42, R43, R44, R45, R46, R47, R48, R49, R52, R60, R61, R62, R63, R64, R65, R66, R67, R70, R73, R88, R90, R92, R94, R99, R100, R102, R103, R104, R108, R117, R118, R119, R120, R121	57	C25744	Yageo	RC0402FR-0710KP	Digi-Key	YAG1249CT-ND
330R1%	Thick Film 0402 330 Ohm 1% 1/16W ±100ppm/°C Molded SMD Paper T/R	R4, R5, R82	3	C12246	Yageo	AF0402FR-07330RL	Digi-Key	13-AF0402FR-07330RLCT-ND
5.1K1%	Thick Film 0402 5.1K Ohm 1% 1/16W 0402	R6, R89, R101, R113	4	C25905	Stackpole Electronics	RMCF0402FT5K10	Digi-Key	RMCF0402FT5K10CT-ND
1K1%	Thick Film 0402 1K Ohm 1% 1/8W 0402	R7, R85	2	C21190	TEConnectivity	CRGP0402F1K0	Digi-Key	A130355CT-ND
100K1%	Thick Film 0402 100K OHM 1% 1/16W 0402	R9, R10, R96, R105, R109, R116, R124, R125	8	C25741	Stackpole Electronics	RMCF0402FT100K	Digi-Key	RMCF0402FT100KCT-ND
51K1%	Res Thick Film 0402 51K Ohm 1% 0.063W(1/16W) ±100ppm/C Pad SMD Automotive T/R	R11, R12, R13, R14, R15, R16, R50, R51, R53, R54, R55, R56, R57, R68, R69, R71, R72	17	C25794	Stackpole Electronics	RMCF0402FT51K0	Digi-Key	RMCF0402FT51K0CT-ND
2.8K1%	Thick Film 0402 2.8K Ohm 1% 0.063W ±100ppm/°C Molded SMD Paper T/R	R17, R21, R58, R59, R93, R106, R107, R111, R112, R114	10	C62741	Stackpole Electronics	RMCF0402FT2K80	Digi-Key	RMCF0402FT2K80CT-ND
8.2K1%	Res Thick Film 0402 8.2K Ohm 5% 0.063W ±100ppm/°C Molded SMD Paper T/R	R18, R19, R20	3	C25924	Stackpole Electronics	RMCF0402JT8K20	Digi-Key	738-RMCF0402JT8K20CT-ND
220R5%	Thick Film 220 OHM 5% 1W 2512	R97, R98	2	C38808	Stackpole Electronics	RMCF2512JT220R	Digi-Key	RMCF2512JT220RCT-ND
680R1%	Thick Film 0402 680 Ohm 1% 0.063W(1/16W) ±100ppm/C Pad SMD Automotive T/R	R110	1	C25130	Stackpole Electronics	RMCF0402FT680R	Digi-Key	RMCF0402FT680RCT-ND
KSC441J70SHLFS	Switch Tactile N.O. SPST Round Button J-Bend	SW1	1	C221748	ITT C&K	KSC441J70SHLFS	Digi-Key	401-1784-1-ND
KSC7411JLFS	Switch Tactile N.O. SPST Round Button J-Bend	SW2	1	C221766	ITT C&K	KSC7411JLFS	Digi-Key	CKN10309CT-ND
SP485EEN-L/TR-ND	IC TXRXRS485 HALF DUPLEX 8SOIC	U1	1	C6855	Exar	SP485EEN-L/TR	Digi-Key	SP485EEN-L/TR-ND
Teensy 4.1	Teensy 4.1 Development Board	U2	1		SparkFun	DEV-16771	Digi-Key	1568-DEV-16771-ND
TPD4E001DRLR	TVS DIODE 5.5VWM SOT6	U3, U7, U8, U9, U10, U14, U15	7	C527516	Texas Instruments	TPD4E001DRLR	Digi-Key	296-21887-1-ND
L7805CD2T-TR	IC REG LDO 5V 1.5A D2PAK	U4	1	C15077	STMicroelectronics	L7805CD2T-TR	Digi-Key	497-1171-2-ND
CD74HC4051PWR	5-V, 8: 1, 1-channel analog multiplexer 16-TS	U5, U6, U12	3	C352826	Texas Instruments	CD74HC4051PWR	Newark	29AH3620
NCP431AVSNT1G	V-Ref Adjustable 2.5V to 36V 100mA 3-Pin SOT-	U18	1	C3113	ON Semiconductor	NCP431AVSNT1G	Digi-Key	NCP431AVSNT1GOSCT-ND