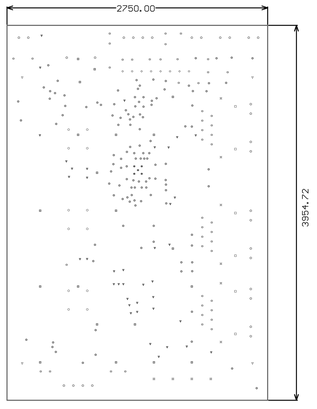

Layer	Name	Material	Thickness	Constant	Board Layer Stack
	Silkscreen Top				
	Solder Mask Top	Solder Resist	1.00mil	3.2	
	Top Surface Plating	Lead-Free	1.40mil		
1	Top		0.70mil		
	Dielectric 1	2 x 2116	9.10mil	4.3	
2	GND Layer 2		0.70mil		
	Dielectric2	Core	39.00mil	4.6	
3	Power Layer 3		0.70mil		
	Dielectric3	2 x 2116	9.10mil	4.3	
4	Bottom		0.70mil		
	Bottom Surface Finish	Lead-Free	1.40mil		
	Solder Mask Bottom	Solder Resist	1.00mil	3.2	
	Silkscreen Bottom				

0VERALL THICKNESS 0.062 +/- .007

Notes:

1. LATEST VERSION OF ALL REFERENCED SPECIFICATIONS TO BE USED UNLESS OTHERWISE SPECIFIED.
2. FABRICATE IN ACCORDANCE WITH IPC-6012B, CLASS 2 UNLESS OTHERWISE SPECIFIED.
3. INSPECT IN ACCORDANCE WITH IPC-6012B, CLASS 2 UNLESS OTHERWISE SPECIFIED.
4. MATERIAL:
   HIGH TEMP FR4 (OR EQUIVALENT FOR ROHS COMPLIANCE).
   FLAME RETARDENT, IN ACCORDANCE WITH UL STANDARD 796.
   FINISHED BOARD MUST MEET UL94V-0.
5. SILKSCREEN NOMENCLATURE NOT TO COVER ANY PORTION OF A COMPONENT PAD. FABRICATOR TO CLIP ANY NON-CONFORMING SILKSCREEN NOMENCLATURE. DO NOT REMOVE SILKSCREEN FROM TENTED VIAS. SILKSCREEN COLOR: WHITE.
6. USE LPI SOLDER MASK OVER BARE COPPER PER IPC-SM-840C, CLASS 2. SOLDERMASK COLOR: BLUE.
7. GLOBAL AND LOCAL FIDUCIALS MUST BE FREE OF ANY MARKINGS.
8. FULL NETLIST TESTING REQUIRED UNLESS OTHERWISE SPECIFIED. TESTING SHOULD CONFORM TO IPC-9252.
9. REMOVAL OF NON-FUNCTIONAL PADS ON INNER LAYERS ALLOWED.
10. THEIVING OF OUTER LAYERS IS ACCEPTABLE AS LONG AS THE COPPER IS KEPT A MININMUM OF 0.200" FROM ANY DESIGN FEATURE.
11. PRIOR TO BOARD FABRICATION, COMPARE GERBER DATA TO SUPPLIED IPC-D-356A NETLIST. REPORT ALL DISCREPANCIES.
12. ENTIRE BOARD TO BE IMMERSION GOLD PLATED. 2 TO 5 MICROINCHES OVER 100 MICROINCHES MINIMUM OF ELECTROLESS NICKEL.
13. BOARD TO BE ROHS COMPATIBLE.
14. IMPEDANCE REQUIROMENTS: LAYER 1 ARE TO BE 100 ohm DIFFERENTIAL +/- 10%. 8mill TRACES WITH 6.5mill SPACING ON LAYER 1.
15. ANY CHANGES TO THE SUPPLIED GERBER DATA TO BE APPROVED BY S2 SECURITY.

Symbol	Count	Hole Size	Plated	Hole Type	Drill Layer Pair	Via/Pad	Pad Shape	Template	Description	Hole Tolerance (+)	Hole Tolerance (-)
	4	70.00mil (1.778mm)	PTH	Round	Top - Bottom	Pad	Rounded	(Mixed)			
	4	152.00mil (3.861mm)	PTH	Round	Top - Bottom	Pad	Rounded	c724h386z508			
	5	11.00mil (0.279mm)	PTH	Round	Top - Bottom	Via	Rounded	v61h28m61			
	6	62.00mil (1.575mm)	PTH	Round	Top - Bottom	Pad	Rounded	c248h157			
	6	128.00mil (3.251mm)	NPTH	Round	Top - Bottom	Pad	Rounded	c51hn325m76p76			
	8	44.00mil (1.118mm)	PTH	Round	Top - Bottom	Pad	(Mixed)	(Mixed)			
	12	43.00mil (1.092mm)	PTH	Round	Top - Bottom	Pad	(Mixed)	(Mixed)			
	20	28.00mil (0.711mm)	PTH	Round	Top - Bottom	Via	Rounded	v127h71			
	30	40.00mil (1.016mm)	PTH	Round	Top - Bottom	Pad	(Mixed)	(Mixed)			
	39	20.00mil (0.508mm)	PTH	Round	Top - Bottom	Via	Rounded	v102h51			
	47	35.00mil (0.889mm)	PTH	Round	Top - Bottom	Pad	(Mixed)	(Mixed)			
	123	10.00mil (0.254mm)	PTH	Round	Top - Bottom	Via	Rounded	v56h25			
	304 Total										

DRAWN: SBS DATE: 06/27/2022
CHECKED: DATE:
CHECKED: DATE:
UNLESS OTHERWISE SPECIFIED: DIMENSIONS ARE IN INCHES AND APPLY AFTER PROCESSING TOLERANCES
TOLERANCES
.X = +/- .1 .XXX = +/- .005
.XX = +/- .01 ANGLES = +/- 2
REMOVE ALL BURRS AND SHARP EDGES

S2Lenel
ONE SPEEN ST.
FRAMINGHAM, MA 01791

DWG TITLE
SAM-E BOARD
FABRICATION DRAWING

SIZE B DWG NO. S2-PC-0015 Rev E

SCALE: 1/1

NOTES

NOTES

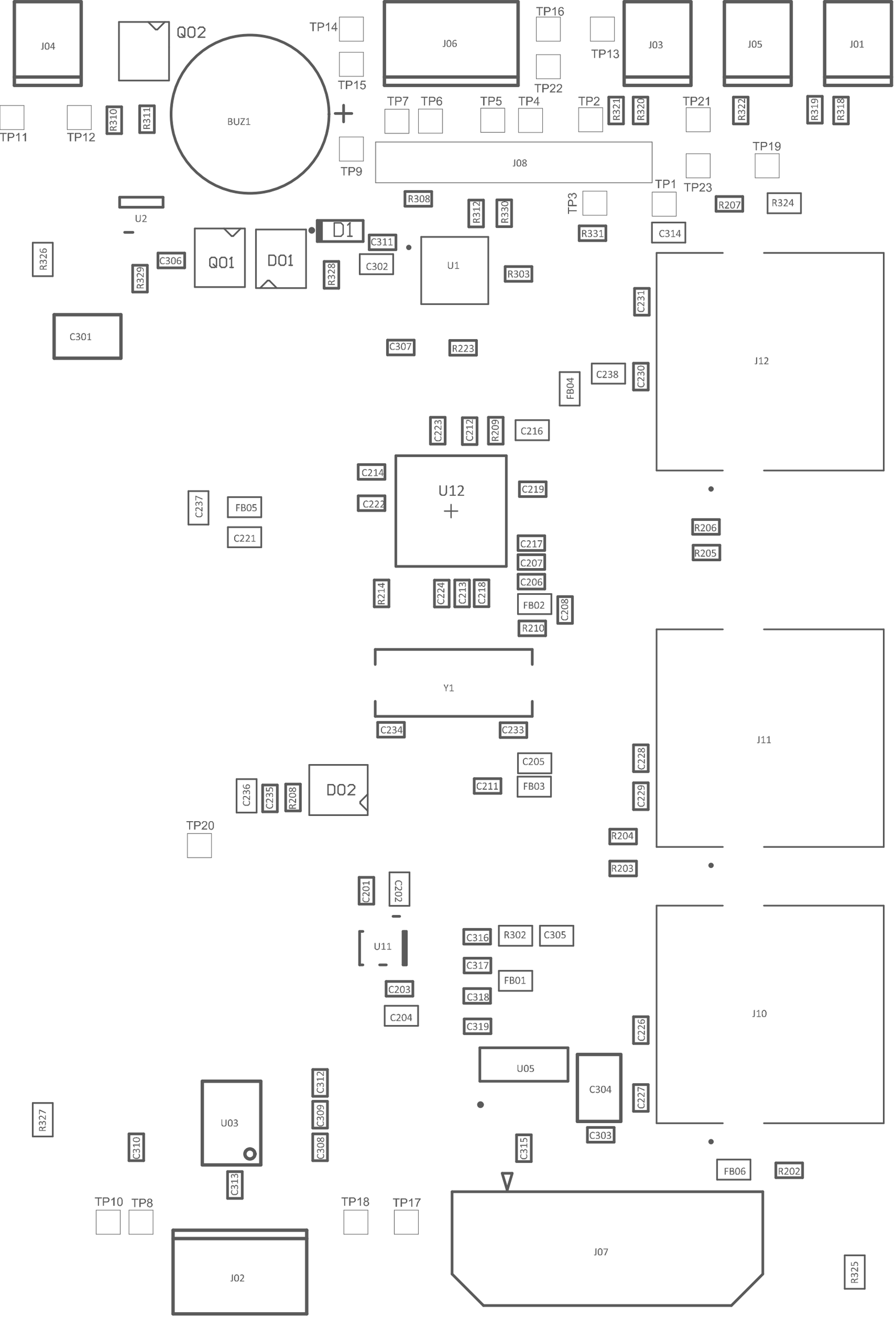
J04
Q02
TP14
J06
TP16
TP13
J03
J05
J01
TP15
TP22
BUZ1
TP11
TP12
R310
R311
TP7
TP6
TP5
TP4
TP2
R321
R320
TP21
R322
R319
R318
TP9
J08
TP19
TP1
TP23
TP3
R308
R312
R330
R207
R324
U2
D1
R331
C314
R326
C306
Q01
D01
C311
C302
U1
R303
R329
R328
C231
C301
C307
R223
J12
C238
C230
FB04
C223
C212
R209
C216
C214
U12
C219
C237
FB05
C222
C221
R206
R205
C217
C207
C206
R214
C224
C213
C218
FB02
C208
R210
Y1
C234
C233
J11
C205
C228
C236
C235
R208
D02
C211
FB03
C229
TP20
R204
R203
C201
C202
U11
C316
R302
C305
C317
FB01
C203
C318
C204
C319
J10
C226
U05
C304
C227
R327
U03
C312
C309
C308
C303
C310
C315
C313
FB06
R202
TP10
TP8
TP18
TP17
J07
J02
R325

60WS

70WS

70WS

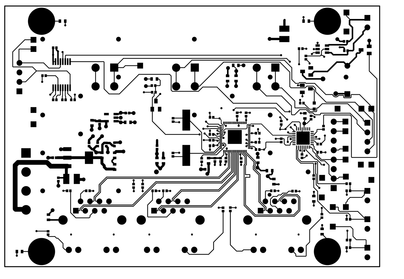

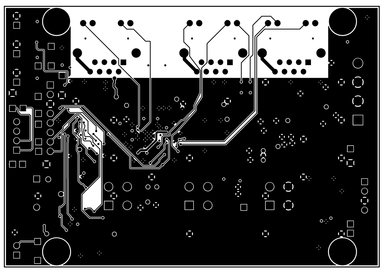

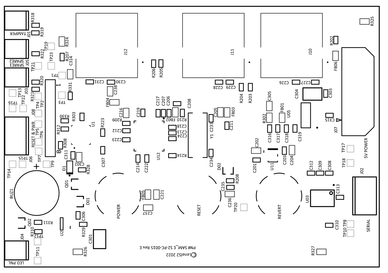

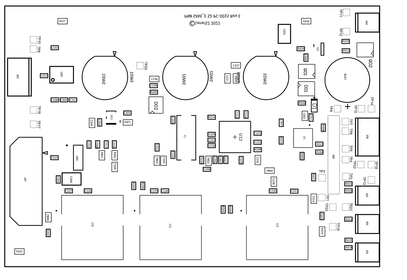

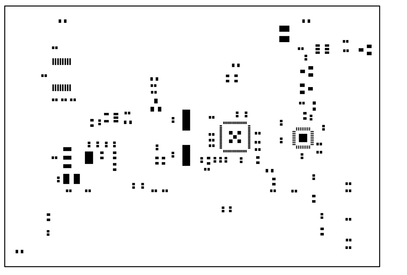

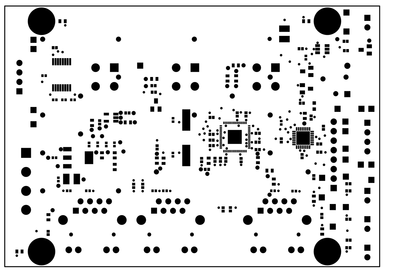

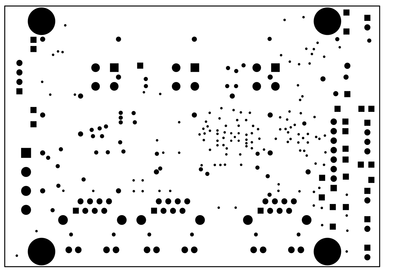

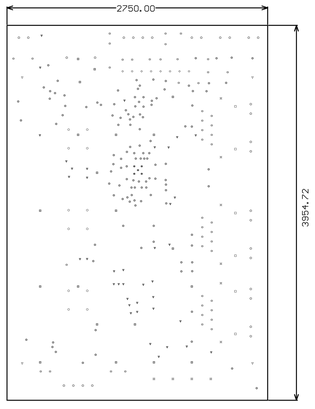

Layer	Name	Material	Thickness	Constant	Board Layer Stack
	Silkscreen Top				
	Solder Mask Top	Solder Resist	1.00mil	3.2	
	Top Surface Plating	Lead-Free	1.40mil		
1	Top		0.70mil		
	Dielectric 1	2 x 2116	9.10mil	4.3	
2	GND Layer 2		0.70mil		
	Dielectric2	Core	39.00mil	4.6	
3	Power Layer 3		0.70mil		
	Dielectric3	2 x 2116	9.10mil	4.3	
4	Bottom		0.70mil		
	Bottom Surface Finish	Lead-Free	1.40mil		
	Solder Mask Bottom	Solder Resist	1.00mil	3.2	
	Silkscreen Bottom				

0VERALL THICKNESS 0.062 +/- .007

Notes:

1. LATEST VERSION OF ALL REFERENCED SPECIFICATIONS TO BE USED UNLESS OTHERWISE SPECIFIED.
2. FABRICATE IN ACCORDANCE WITH IPC-6012B, CLASS 2 UNLESS OTHERWISE SPECIFIED.
3. INSPECT IN ACCORDANCE WITH IPC-6012B, CLASS 2 UNLESS OTHERWISE SPECIFIED.
4. MATERIAL:
   HIGH TEMP FR4 (OR EQUIVALENT FOR ROHS COMPLIANCE).
   FLAME RETARDENT, IN ACCORDANCE WITH UL STANDARD 796.
   FINISHED BOARD MUST MEET UL94V-0.
5. SILKSCREEN NOMENCLATURE NOT TO COVER ANY PORTION OF A COMPONENT PAD. FABRICATOR TO CLIP ANY NON-CONFORMING SILKSCREEN NOMENCLATURE. DO NOT REMOVE SILKSCREEN FROM TENTED VIAS. SILKSCREEN COLOR: WHITE.
6. USE LPI SOLDER MASK OVER BARE COPPER PER IPC-SM-840C, CLASS 2. SOLDERMASK COLOR: BLUE.
7. GLOBAL AND LOCAL FIDUCIALS MUST BE FREE OF ANY MARKINGS.
8. FULL NETLIST TESTING REQUIRED UNLESS OTHERWISE SPECIFIED. TESTING SHOULD CONFORM TO IPC-9252.
9. REMOVAL OF NON-FUNCTIONAL PADS ON INNER LAYERS ALLOWED.
10. THEIVING OF OUTER LAYERS IS ACCEPTABLE AS LONG AS THE COPPER IS KEPT A MININMUM OF 0.200" FROM ANY DESIGN FEATURE.
11. PRIOR TO BOARD FABRICATION, COMPARE GERBER DATA TO SUPPLIED IPC-D-356A NETLIST. REPORT ALL DISCREPANCIES.
12. ENTIRE BOARD TO BE IMMERSION GOLD PLATED. 2 TO 5 MICROINCHES OVER 100 MICROINCHES MINIMUM OF ELECTROLESS NICKEL.
13. BOARD TO BE ROHS COMPATIBLE.
14. IMPEDANCE REQUIROMENTS: LAYER 1 ARE TO BE 100 ohm DIFFERENTIAL +/- 10%. 8mill TRACES WITH 6.5mill SPACING ON LAYER 1.
15. ANY CHANGES TO THE SUPPLIED GERBER DATA TO BE APPROVED BY S2 SECURITY.

Symbol	Count	Hole Size	Plated	Hole Type	Drill Layer Pair	Via/Pad	Pad Shape	Template	Description	Hole Tolerance (+)	Hole Tolerance (-)
	4	70.00mil (1.778mm)	PTH	Round	Top - Bottom	Pad	Rounded	(Mixed)			
	4	152.00mil (3.861mm)	PTH	Round	Top - Bottom	Pad	Rounded	c724h386z508			
	5	11.00mil (0.279mm)	PTH	Round	Top - Bottom	Via	Rounded	v61h28m61			
	6	62.00mil (1.575mm)	PTH	Round	Top - Bottom	Pad	Rounded	c248h157			
	6	128.00mil (3.251mm)	NPTH	Round	Top - Bottom	Pad	Rounded	c51hn325m76p76			
	8	44.00mil (1.118mm)	PTH	Round	Top - Bottom	Pad	(Mixed)	(Mixed)			
	12	43.00mil (1.092mm)	PTH	Round	Top - Bottom	Pad	(Mixed)	(Mixed)			
	20	28.00mil (0.711mm)	PTH	Round	Top - Bottom	Via	Rounded	v127h71			
	30	40.00mil (1.016mm)	PTH	Round	Top - Bottom	Pad	(Mixed)	(Mixed)			
	39	20.00mil (0.508mm)	PTH	Round	Top - Bottom	Via	Rounded	v102h51			
	47	35.00mil (0.889mm)	PTH	Round	Top - Bottom	Pad	(Mixed)	(Mixed)			
	123	10.00mil (0.254mm)	PTH	Round	Top - Bottom	Via	Rounded	v56h25			
	304 Total										

DRAWN: SBS DATE: 06/27/2022
CHECKED: DATE:
CHECKED: DATE:
UNLESS OTHERWISE SPECIFIED: DIMENSIONS ARE IN INCHES AND APPLY AFTER PROCESSING TOLERANCES
TOLERANCES
.X = +/- .1 .XXX = +/- .005
.XX = +/- .01 ANGLES = +/- 2
REMOVE ALL BURRS AND SHARP EDGES

S2Lenel
ONE SPEEN ST.
FRAMINGHAM, MA 01791

DWG TITLE
SAM-E BOARD
FABRICATION DRAWING

SIZE B DWG NO. S2-PC-0015 Rev E

SCALE: 1/1

NOTES

NOTES

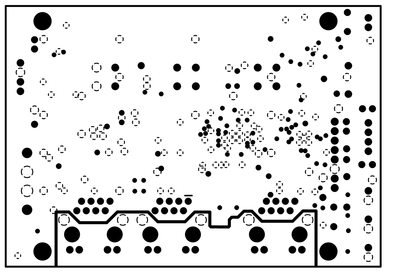

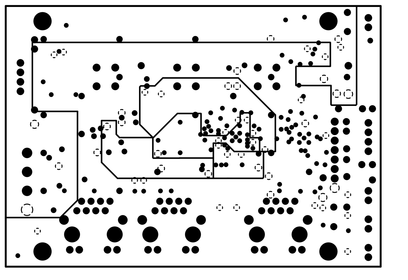

SAM_E SCHEMATIC

REV E

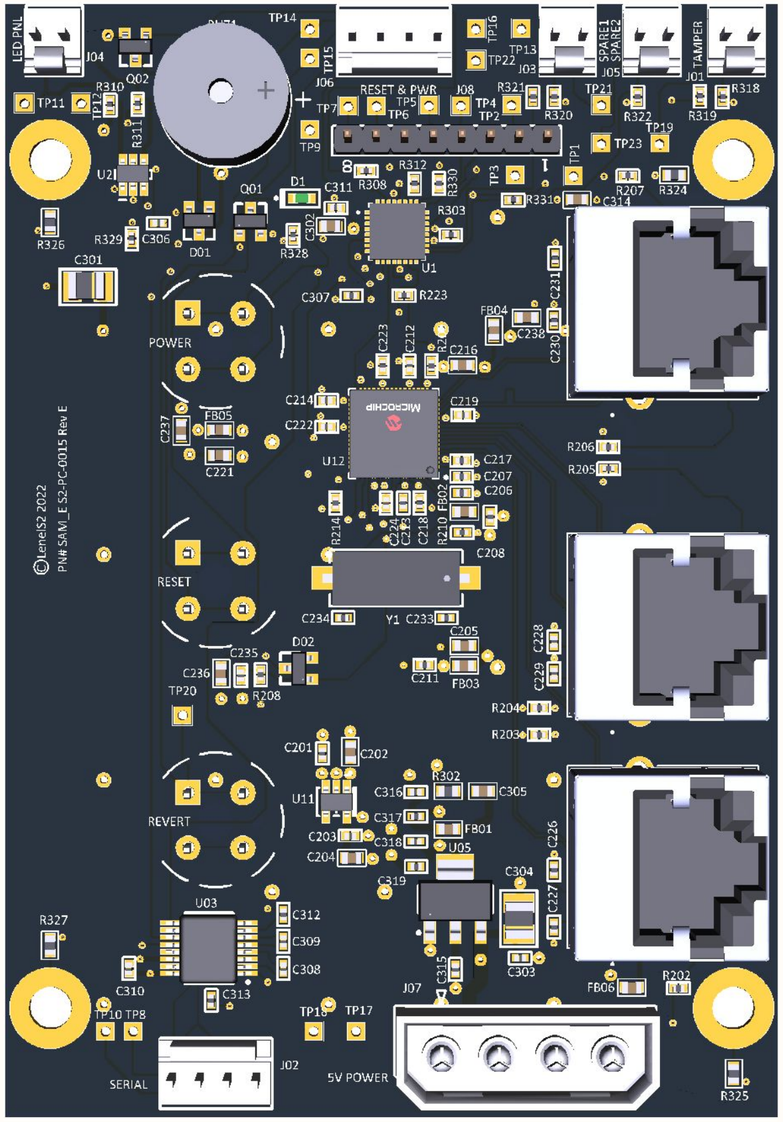

SCHEMATIC INDEX

P1 - LAYOUT, INDEX, LEGEND

P2 - 5-PORT SWITCH

P3 - SAM FUNCTIONS

CIRCUIT TITLE

CIRCUIT LABEL

DESIGN NOTES IN GRAY ARE INFORMATION NOTES — INFO

DESIGN NOTES IN BLUE ARE SILKSCREEN TEXT — SILKSCREEN

DESIGN NOTES IN RED ARE CRITICAL LAYOUT AND PCB NOTES — PCB LAYOUT

DNP

DNP part property visible and set to DNP with dashed box around part indicates : Do Not Populate

© S2 SECURITY CORPORATION 2012
SAM-E BOARD P/N# S2-PC-0015 REV A

S2 SECURITY

S2 SECURITY CORPORATION CONFIDENTIAL

Title: LAYOUT AND INDEX		
Size: A	Document Number: SAM_E	Rev: E
Date: *	Sheet 1 of 3	

P1V2 POWER SUPPLY

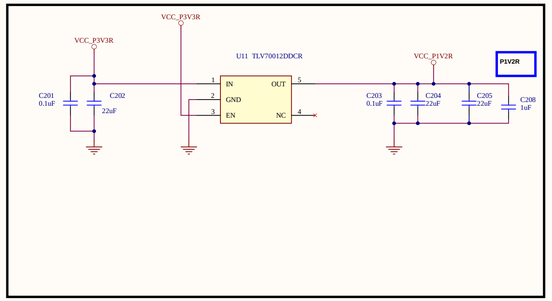

POWER SUPPLY FILTERING

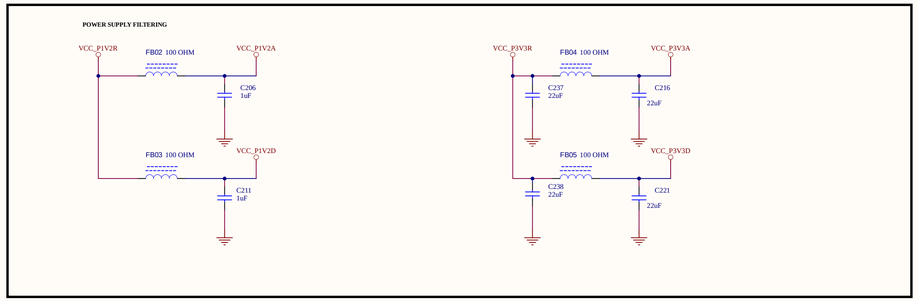

3-PORT ETHERNET SWITCH AND 25MHZ CRYSTAL

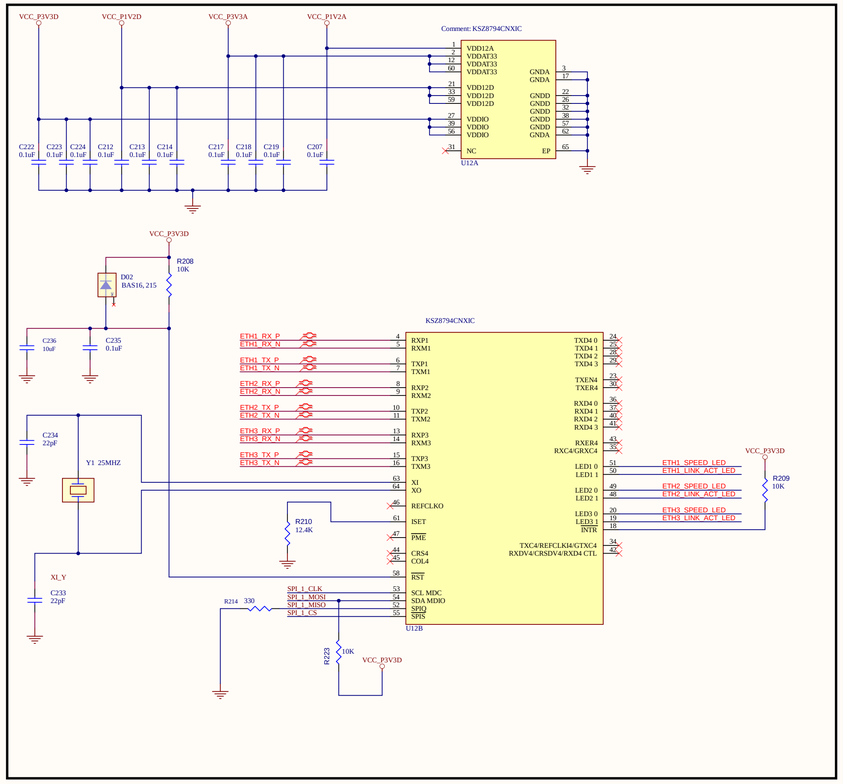

RJ-45 JACKS WITH MAGNETICS

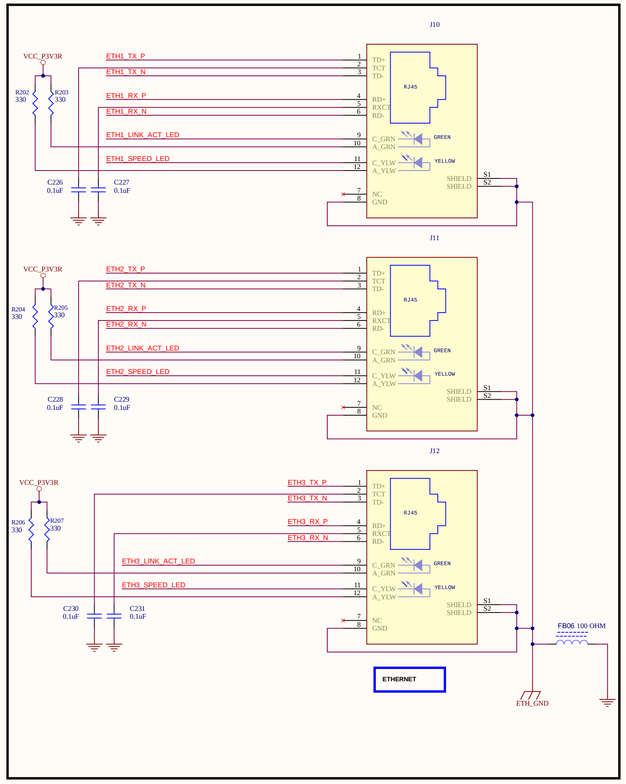

https://microchipsupport.force.com/s/article/KSZ8794---Recommended-Attenuation-Circuitry-for-Ethernet-to-Reduce-Signal-Strength-for-Low-Loss--Short-Cables
The receiver of the embedded PHYs is tuned by default to support long cable length applications. This was developed using low quality and high loss cables.
If the user is using KSZ8794 as a managed switch, please set the register to follow the errata #3 workaround for the low-loss connection.
When using it as unmanaged switch, the user can try adding four (4) 10-ohm series resistors in series on RX and TX pair for each port
to reduce the amplitude a little.

Usually, CAT5 and CAT5E cables work well. CAT6 cable is a low loss cable for 10/100 devices.

S2 SECURITY

S2 SECURITY CORPORATION CONFIDENTIAL

Title: 3-PORT ETH SWITCH		
Size: A	Document Number: SAM_E S2-PC-0015	Rev: E
Date: *	Sheet 2 of 3	

5V INPUT CONNECTOR

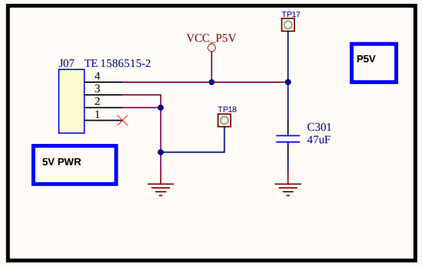

P3V3 POWER SUPPLY

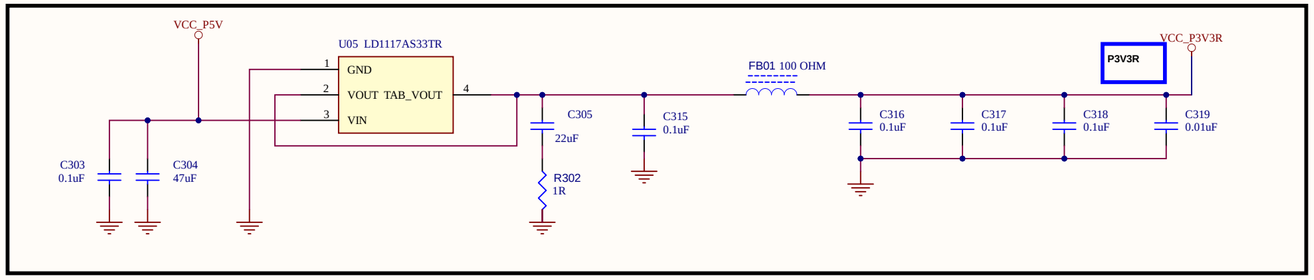

MOUNTING HOLES

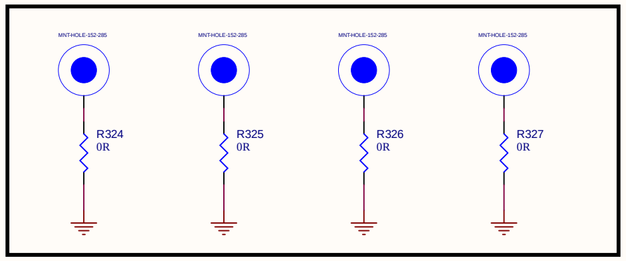

RS-232 LEVEL TRANSLATOR AND CONNECTOR

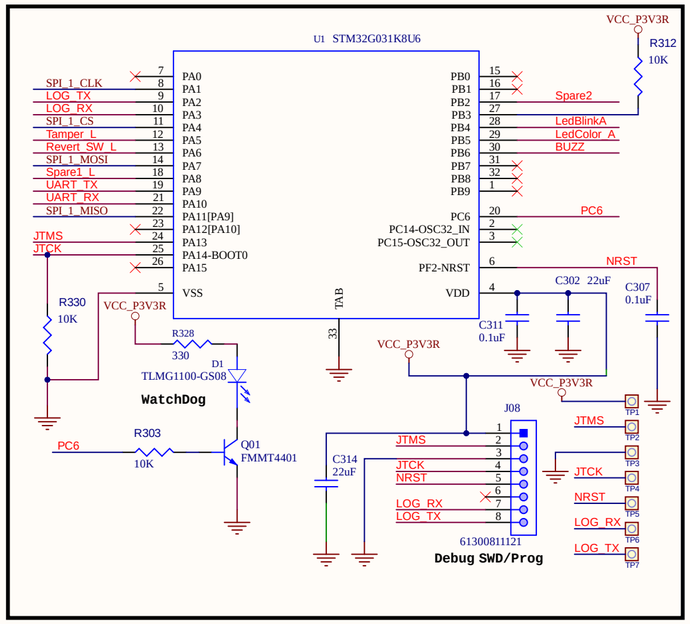

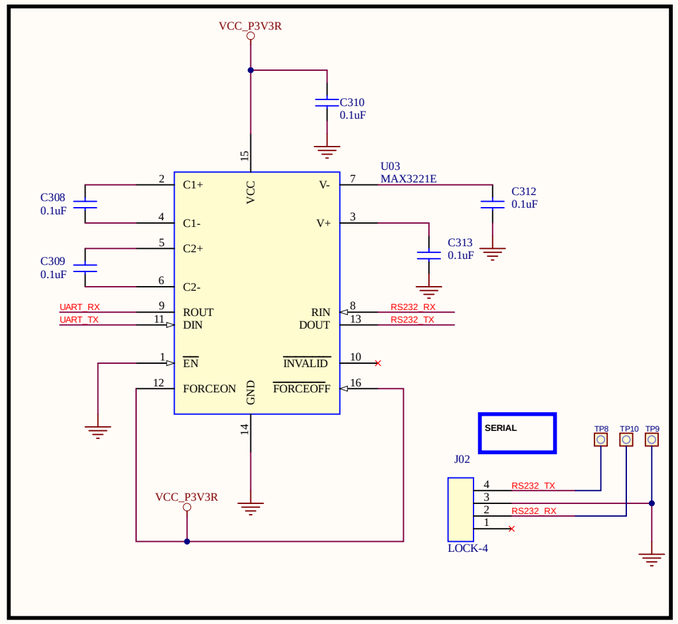

PANEL LED

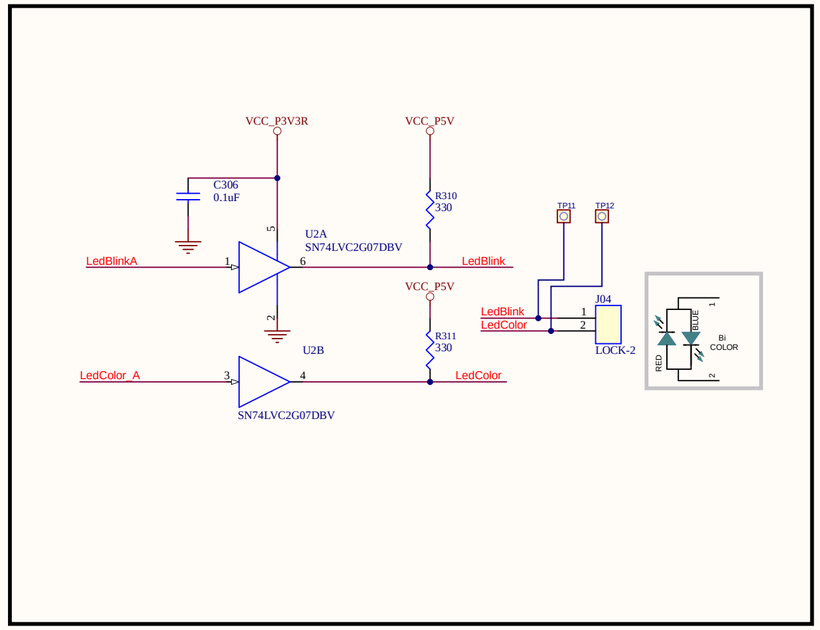

BEEPER CIRCUIT

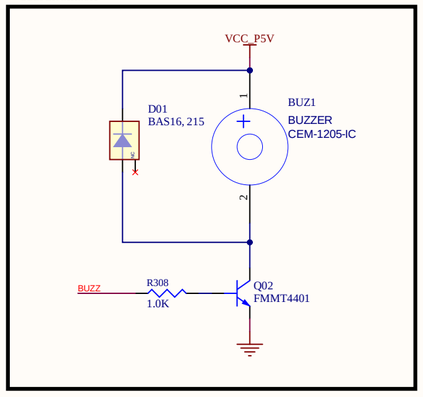

TAMPER AND SPARE CONNECTORS

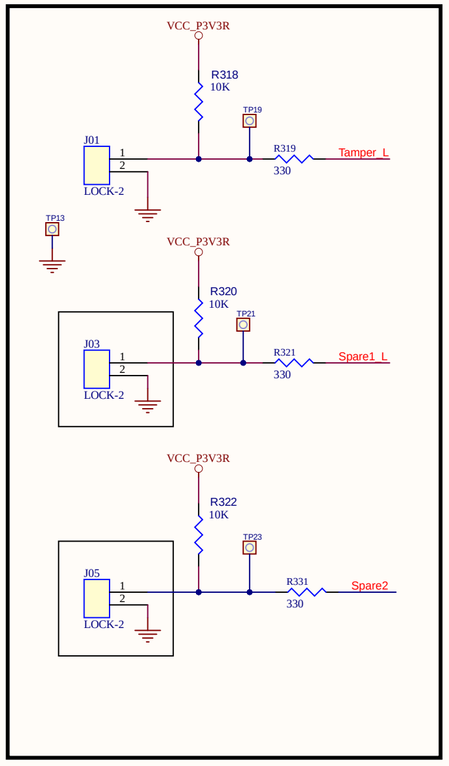

RESET, POWER, AND REVERT BUTTON

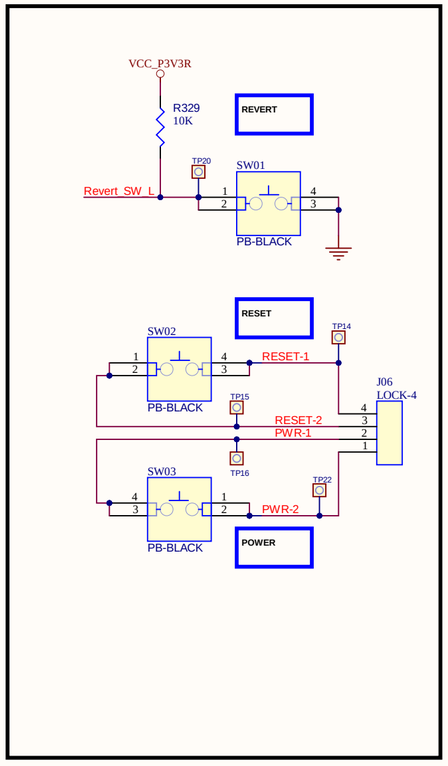

S2 SECURITY

S2 SECURITY CORPORATION CONFIDENTIAL

Title	SAM FUNCTIONS
Size	A
Document Number	SAM_E S2-PC-0015
Rev	E
Date:	*
Sheet	3 of 3