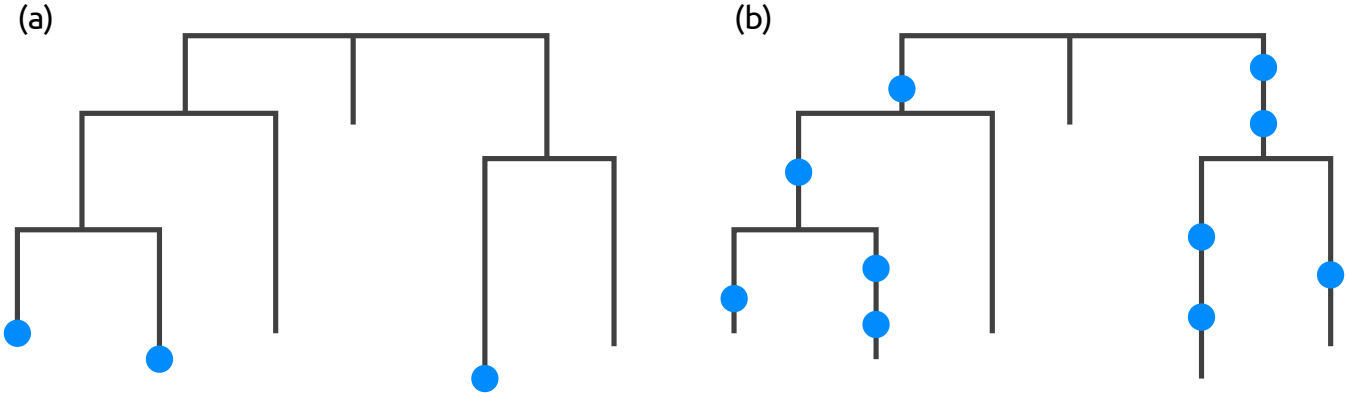
(a)
(b)