BI 1
BI 2
BI 3
BI 4
BI 5
BI 6
BI 7
BI 8
BI 9
BI 10
BI 11
BI 12
BI 13
BI 14
BI 15
BI 16
BI 17
BI 18
BI 19
BI 20

BI / read / 17

query	BI / read / 17
title	Information propagation analysis
pattern	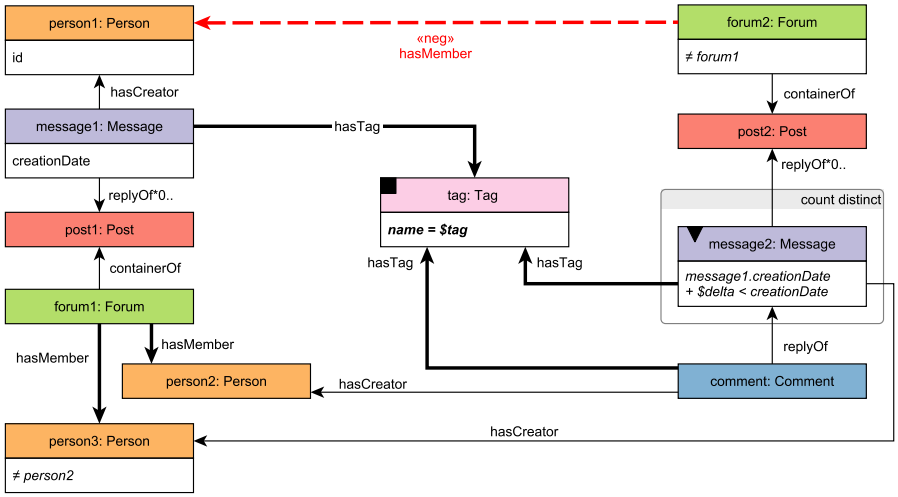
description	This query aims to identify instances of "information propagation" when a Person (`person1`) submits a Message (`message1`) with a given `$tag` to a Forum (`forum1`). This is read by other members of `forum1`, Persons `person2` and `person3` (who must be different Persons). Some time later (specified by the `$delta` parameter), these persons have a discussion with the same `$tag` in a different Forum (`forum2`) where `person1` is not a member. The discussion consists of a Message (`message2`) by `person2` and a direct reply Comment (`comment`) by `person3`. Return IDs of `person1` with the number of interactions their Messages (might have) caused.

params

1	$tag	Long String	Tags with a similar amount of Messages are selected
2	$delta	32-bit Integer	Measured in hours, selected to be between 8 and 16 hours.

result

1	person1.id	ID	R	
2	messageCount	32-bit Integer	A	

sort

1	messageCount	↓	
2	person1.id	↑	

limit	10
CPs	2.1, 2.3, 2.5, 2.6, 8.1