Updates / delete / 1

DEL 1
DEL 2
DEL 3
DEL 4
DEL 5
DEL 6
DEL 7
DEL 8

query	Updates / delete / 1
title	Remove person and its personal forums and message (sub)threads
pattern	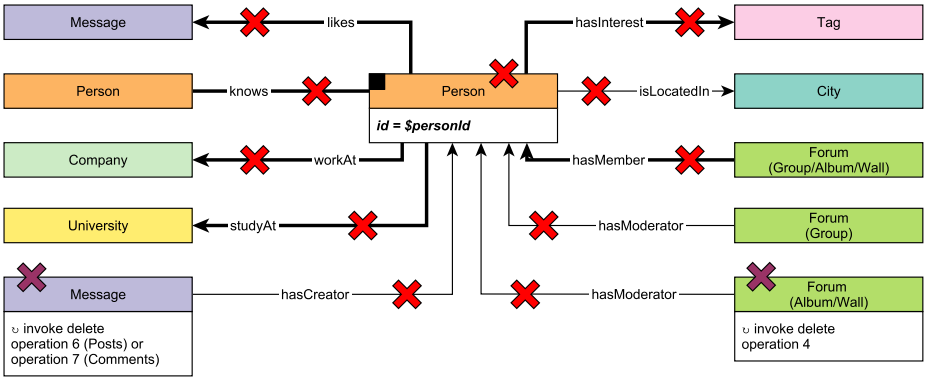
description	Remove a Person with ID `$personId` and its edges (isLocatedIn, studyAt, workAt, hasInterest, likes, knows, hasMember, hasModerator, hasCreator). Additionally, remove the Album and Wall Forums whose moderator is the Person and remove all Messages the Person has created in the rest of the Forums (Groups).
params	1 `$personId` ID
CPs	9.3, 9.4, 9.5
relevance	• Removal of a Person removes Forums of type "Walls" and "Albums" but not "Groups", which can continue if even the founder has left the network. For Groups, the hasModerator edge is deleted. We have discussed various approaches to appoint a new moderator, e.g. 1. choose member at random from the set of existing group members or 2. the member with the oldest group join date becomes the moderator. However, to keep the generator and the workload simple, currently no moderator is selected, leaving the group without a moderator. • Removal of a Person removes all Posts/Comments they are creator of this could result in the removal of a Comment in the middle of a thread.

Updates / delete / 2

DEL 1
DEL 2
DEL 3
DEL 4
DEL 5
DEL 6
DEL 7
DEL 8

query	Updates / delete / 2
title	Remove post like
pattern	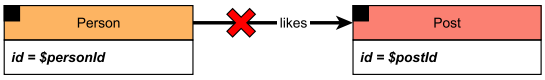
description	Given a Person with ID `$personId` and a Post with ID `$postId`, remove the likes edge between them.
params	1 `$personId` ID 2 `$postId` ID
CPs	9.4
relevance	Removal of a likes edge is a rare event, e.g. people accidently liking a Post, this can be reflected by the relative frequency of the operation.

Updates / delete / 3

DEL 1
DEL 2
DEL 3
DEL 4
DEL 5
DEL 6
DEL 7
DEL 8

query	Updates / delete / 3
title	Remove comment like
pattern	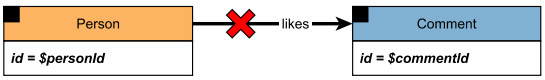
description	Given a Person with ID `$personId` and a Comment with ID `$commentId`, remove the likes edge between them.
params	1 `$personId` ID 2 `$commentId` ID
CPs	9.4
relevance	Removal of a likes edge is a rare event, e.g. people accidently liking a Comment, this can be reflected by the relative frequency of the operation.

Updates / delete / 4

DEL 1
DEL 2
DEL 3
DEL 4
DEL 5
DEL 6
DEL 7
DEL 8

query	Updates / delete / 4
title	Remove forum and its content
pattern	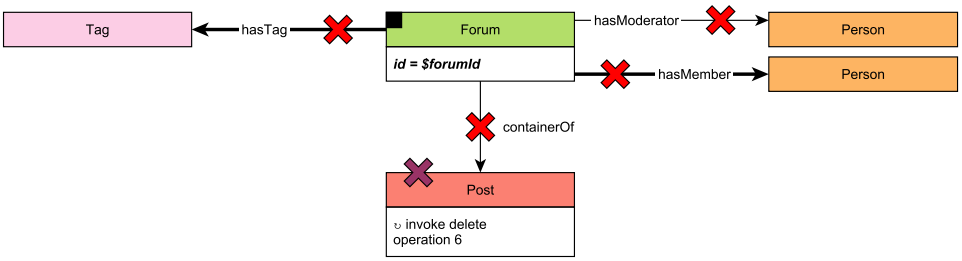
description	Remove a Forum with ID `$forumId` and its edges (hasModerator, hasMember, hasTag) and all Posts in the Forum (connected by containerOf edges) and their direct and transitive Comments.
params	1 `$forumId` ID
CPs	9.3, 9.4, 9.5
relevance	n/a

Updates / delete / 5

DEL 1
DEL 2
DEL 3
DEL 4
DEL 5
DEL 6
DEL 7
DEL 8

query	Updates / delete / 5
title	Remove forum membership
pattern	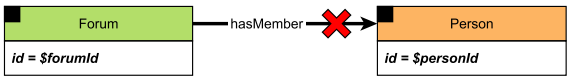
description	Given a Forum with ID `$forumId` and a Person with ID `$personId`, remove the hasMember edge between them.
params	1 `$forumId` ID 2 `$personId` ID
CPs	9.4
relevance	n/a

Updates / delete / 6

DEL 1
DEL 2
DEL 3
DEL 4
DEL 5
DEL 6
DEL 7
DEL 8

query	Updates / delete / 6
title	Remove post thread
pattern	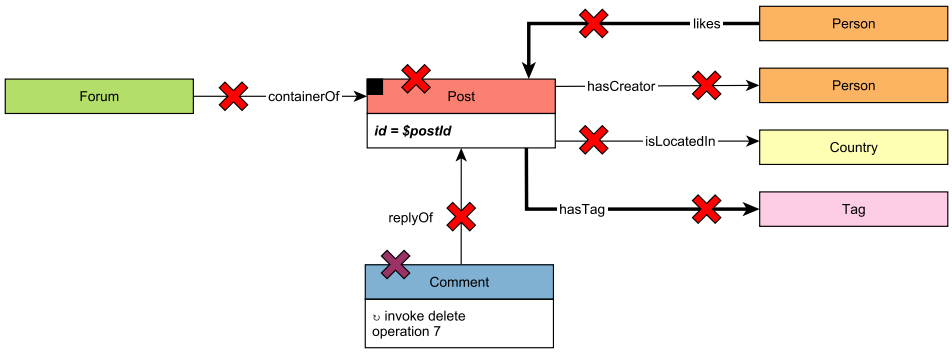
description	Remove a Post node with ID `$postId` and its edges (isLocatedIn, likes, hasCreator, hasTag, containerOf). Remove all replies to the Post and the connecting replyOf edges. In addition, remove all transitive reply Comments to the Post and their edges.
params	1 `$postId` ID
CPs	9.3, 9.4, 9.5
relevance	n/a

Updates / delete / 7

DEL 1
DEL 2
DEL 3
DEL 4
DEL 5
DEL 6
DEL 7
DEL 8

query	Updates / delete / 7
title	Remove comment subthread
pattern	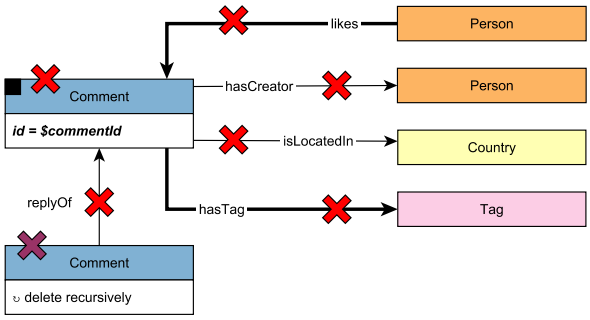
description	Remove a Comment node with ID `$commentId` and its *edges* (isLocatedIn, likes, hasCreator, hasTag). In addition, remove all replies to the Comment connected by replyOf and their *edges*.
params	1 `$commentId` ID
CPs	9.3, 9.4, 9.5
relevance	n/a

Updates / delete / 8

DEL 1
DEL 2
DEL 3
DEL 4
DEL 5
DEL 6
DEL 7
DEL 8

query	Updates / delete / 8
title	Remove friendship
pattern	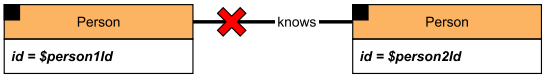
description	Given two Person nodes with IDs `$person1Id` and `$person2Id`, remove the knows edge between them.
params	1 `$person1Id` ID 2 `$person2Id` ID
CPs	9.4
relevance	n/a