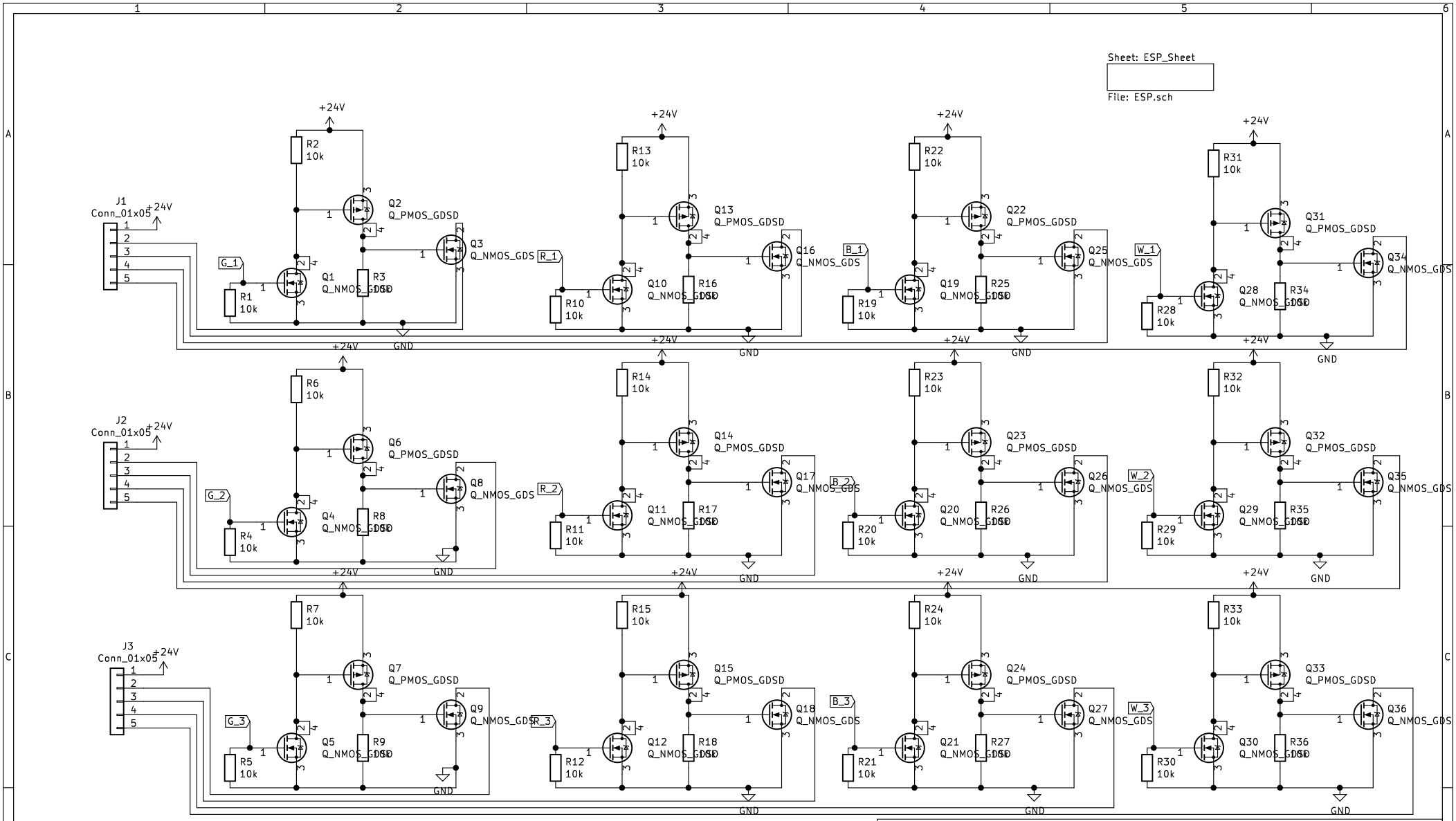

Sheet: /
File: LED Controller.sch

Title:

Size: A4	Date:	**Rev:**
KiCad E.D.A. kicad (5.1.10)-1		Id: 1/2

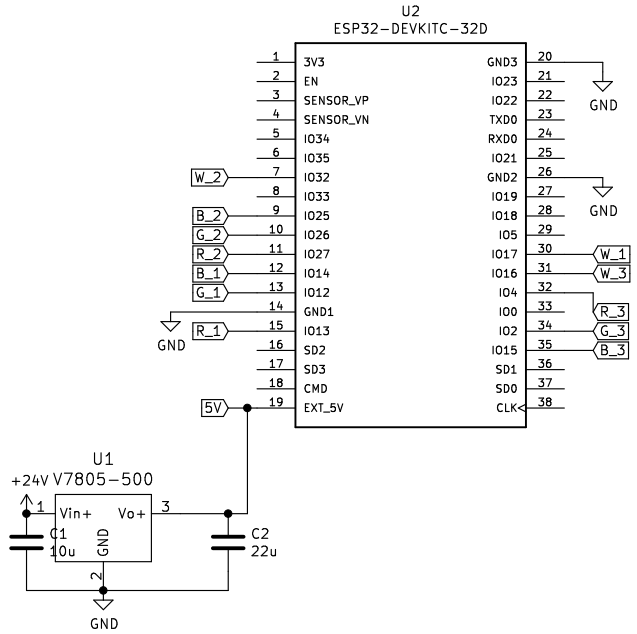

Sheet: /ESP_Sheet/
File: ESP.sch

Title:

Size: A4	Date:	**Rev:**
KiCad E.D.A. kicad (5.1.10)-1		Id: 2/2