RAMYA SATHIANATHAN POLYTECHNIC COLLEGE PUDUPATTI VILLAGE, SENGIPATTI, THANJAVUR.

DEPARTMENT OF
ELECTRICAL AND ELECTRONICS ENGINEERING

Smart Vehicle Speed Detection System

MOHAMED ALI SAIFUDEEN I	25311043
SANJAY M	25311052
ADHAVAN	25387323
PRASANNA R	25311050
MOHAN	25311044

GUIDED BY
SETHUPATHY S M

Abstract – Vehicle Speed Detection System

This project presents the design and implementation of a vehicle speed detection system using the Arduino Uno R3 and infrared (IR) sensors. The main objective of this system is to measure the speed of a moving object by calculating the time taken to travel between two fixed points.

The system consists of two IR sensor modules placed at a known distance apart. When a vehicle or object passes the first sensor, the Arduino records the initial time using microsecond precision. As the object passes the second sensor, the final time is recorded. The speed of the object is then calculated using the fundamental physics formula: Speed = Distance / Time. The computed speed is displayed on a 16x2 LCD display using an I2C communication module.

To improve measurement accuracy, hardware interrupts are used to capture precise timing without delay. The system is designed to be cost-effective, simple to implement, and suitable for real-time speed monitoring applications. This project demonstrates the practical application of embedded systems, sensor interfacing, and real-time data processing.

The proposed speed detection system can be further extended for traffic monitoring, industrial automation, sports timing systems, and scientific experiments involving motion analysis.

Introduction – Vehicle Speed Detection System

Measuring the speed of moving vehicles is an important requirement in traffic management, industrial automation, and scientific research. Traditional speed measurement systems such as radar guns and laser-based devices are accurate but expensive and complex. To provide a low-cost and simple alternative, this project presents a vehicle speed detection system using the Arduino Uno R3 and Infrared (IR) sensors.

The system works on a simple principle of motion measurement. Two IR sensors are placed at a fixed distance from each other. When a moving object passes the first sensor, the microcontroller starts recording time. When the object reaches the second sensor, the time recording stops. Using the measured time and the known distance between the sensors, the speed of the object is calculated using the formula:

Speed = Distance / Time

The calculated speed is displayed on a 16x2 LCD display through an I2C interface. The use of hardware interrupts ensures accurate timing by minimizing delay and improving system performance.

This project demonstrates the practical application of embedded systems, real-time processing, and sensor interfacing. It provides a simple, cost-effective, and efficient method for measuring speed and can be further extended for real-world applications such as traffic monitoring systems, conveyor belt speed measurement, and motion analysis experiments.

Existing System – Vehicle Speed Detection System

The existing vehicle speed detection systems mainly rely on advanced technologies such as radar-based speed guns, laser (LIDAR) speed measurement devices, and road-embedded sensor systems. These systems are widely used by traffic police and highway authorities for monitoring vehicle speed and enforcing traffic rules. Although they provide accurate results, they have several limitations.

In many cases, speed measurement depends on radar speed guns that use radio waves to calculate the speed of moving vehicles. These devices are highly accurate but expensive and require trained personnel to operate them. Additionally, radar systems can sometimes be affected by signal interference and environmental conditions.

Some advanced systems use laser-based speed detection technology, which measures the time taken for a laser beam to reflect from a moving vehicle. While these systems offer high precision, they are costly, sensitive to weather conditions, and require proper alignment and maintenance.

Another commonly used method involves inductive loop sensors embedded in roads. These systems detect vehicles passing over them and calculate speed accordingly. However, installation of such systems requires road excavation, high infrastructure cost, and regular maintenance.

Most of these existing systems are complex, expensive, and not suitable for small-scale applications, educational purposes, or low-budget implementations. They are mainly designed for large-scale traffic monitoring rather than simple experimental or learning-based projects.

Therefore, the limitations of existing systems highlight the need for a simple, cost-effective, and easy-to-implement speed detection system using microcontrollers and sensors, which can measure vehicle speed accurately without requiring expensive equipment or complex infrastructure.

Disadvantages of Existing Vehicle Speed Detection System

Existing vehicle speed detection systems such as radar-based speed guns, laser (LIDAR) devices, and road-embedded sensors provide accurate results, but they have several disadvantages.

1. High Cost
Radar and laser-based speed detection systems are expensive. The equipment cost, installation charges, and maintenance expenses are very high, making them unsuitable for small-scale or educational applications.

2.Complex Technology
These systems use advanced technologies like Doppler radar and laser measurement, which require skilled personnel to operate and maintain. This increases operational complexity.

3.Weather Dependency
Laser-based systems are sensitive to environmental conditions such as rain, fog, dust, and extreme sunlight. These factors can reduce measurement accuracy.

4.Installation Difficulty
Inductive loop sensors require digging and embedding sensors into roads. This process is time-consuming, costly, and not easily modifiable once installed.

5.High Maintenance Requirements
Advanced speed detection systems require periodic calibration and maintenance to ensure accuracy, increasing long-term operational costs.

6.Limited Accessibility
These systems are mainly used by traffic authorities and are not affordable or accessible for students, researchers, or small experimental setups.

7.Lack of Cost-Effective Educational Models
Most commercial systems are not designed for learning purposes. They are large-scale systems that are not suitable for academic mini-projects.

Proposed System – Vehicle Speed Detection System

The proposed Vehicle Speed Detection System is a microcontroller-based solution designed to measure the speed of moving vehicles accurately and in real time. This system uses two Infrared (IR) sensors and the Arduino Uno R3 to calculate speed based on the time taken by a vehicle to travel between two fixed points.

The system consists of two IR sensor modules placed at a known distance apart, a microcontroller (Arduino Uno R3), a 16x2 LCD display with I2C module, and a regulated power supply. The IR sensors continuously monitor the path for any moving object. The microcontroller processes the signals received from the sensors and performs speed calculations.

When a vehicle passes through the system, the following actions occur:

- The first IR sensor detects the vehicle and starts the internal timer.
- The second IR sensor detects the vehicle and stops the timer.
- The Arduino calculates the time difference between the two detections.
- The system computes the vehicle speed using the formula:

  Speed = Distance / Time
- The calculated speed is displayed instantly on the 16x2 LCD screen.

The system uses hardware interrupts to ensure accurate time measurement without delay, improving precision and response time.

Additionally, the proposed system is:

- Cost-effective
- Easy to design and implement
- Suitable for educational and experimental purposes
- Compact and portable
- Low power consuming

This vehicle speed detection system provides a simple, reliable, and affordable alternative to traditional radar and laser-based systems. It demonstrates the practical application of embedded systems, real-time processing, and sensor interfacing while offering accurate speed measurement in a controlled environment.

Advantages of Proposed Vehicle Speed Detection System

1.Real-Time Speed Monitoring

The system continuously monitors the movement of vehicles and instantly calculates the speed as soon as the vehicle passes through both IR sensors.

2.Instant Speed Display

The calculated speed is immediately displayed on the 16x2 LCD screen, allowing users to view real-time speed measurements without delay.

3.Accurate Time Measurement

By using hardware interrupts and microsecond timing functions in the Arduino Uno R3, the system ensures precise and reliable speed calculation.

4. **Low-Cost Implementation**
   Compared to radar and laser-based speed detection systems, the proposed system uses affordable components such as IR sensors and Arduino, making it budget-friendly.
5. **Simple Installation and Setup**
   The system does not require complex infrastructure or road excavation. It can be easily assembled using basic electronic components.
6. **Portable and Compact Design**
   The entire setup is small and lightweight, making it easy to transport and use for demonstrations, experiments, or academic purposes.
7. **Low Power Consumption** The system consumes minimal power and can be operated using a standard adapter or battery supply. **Scalability and Expandability**
8. Additional features such as data logging, wireless communication, IoT integration, or cloud storage can be added in the future.
   Educational and Experimental Value
9. The system helps in understanding embedded systems, sensor interfacing, real-time processing, and basic physics concepts like motion and speed.

10. **Reduced Human Dependency**
    The automated detection and calculation eliminate the need for manual speed measurement, improving efficiency and accuracy.

Circuit diagram

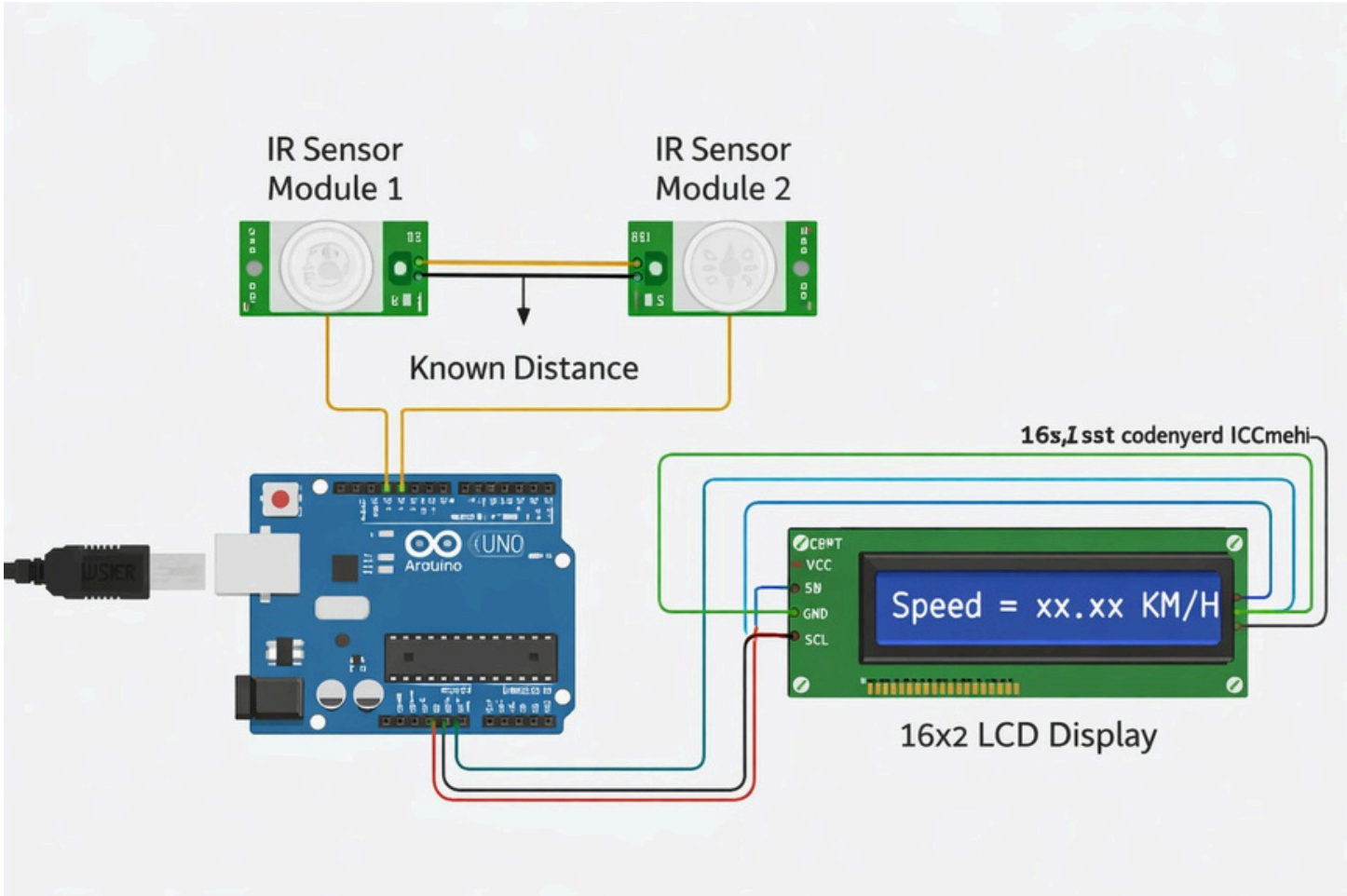

Coding

```
#include
#include <LiquidCrystal_I2C.h>
<Wire.h>
// Initialize the I2C LCD with the default address (usually 0x27 or 0x3F)

LiquidCrystal_I2C lcd(0x27, 16, 2);

#define SENSOR_1_PIN 2 // Pin for first IR sensor (INT0)

#define SENSOR_2_PIN 3 // Pin for second IR sensor (INT1)

volatile unsigned long timeSensor1 = 0;

volatile unsigned long timeSensor2 = 0;

volatile bool sensor1Triggered = false;
```

```
volatile bool sensor2Triggered = false;

const float distanceBetweenSensors = 0.1; // Distance between sensors in meters

float speed = 0; // Speed in meters per second (m/s)

void setup() {

 // Initialize the LCD

 lcd.init();

 lcd.backlight();

 lcd.setCursor(0, 0);

 lcd.print("Speed Gun");

 delay(2000); // Show the title for 2 seconds

 lcd.clear();

 pinMode(SENSOR_1_PIN, INPUT);

 pinMode(SENSOR_2_PIN, INPUT);

 // Attach interrupt for sensor 1 (INT0) and sensor 2 (INT1)

 attachInterrupt(digitalPinToInterrupt(SENSOR_1_PIN), sensor1ISR, RISING);

 attachInterrupt(digitalPinToInterrupt(SENSOR_2_PIN), sensor2ISR, RISING);

}

void loop() {

 if (sensor1Triggered && sensor2Triggered) {

sensor1Triggered = false;

sensor2Triggered = false;

unsigned long timeDifference = abs(timeSensor2 - timeSensor1); // Time in microseconds

lcd.clear();

if (timeDifference > 0) {

   speed = distanceBetweenSensors / (timeDifference / 1000000.0); // Convert µs to seconds
```

```
    lcd.setCursor(0, 0);

    lcd.print("Speed:");

    lcd.setCursor(0, 1);

    lcd.print(speed, 2); // Display speed with 2 decimal places

    lcd.print(" m/s");

 } else {

    lcd.setCursor(0, 0);

    lcd.print("Invalid Reading!");





void sensor1ISR() {

 if (!sensor1Triggered) { // Ensure only the first trigger is recorded

 timeSensor1 = micros(); // Record the time of sensor 1 trigger

 sensor1Triggered = true;
   }

 }

}
void sensor2ISR() {

 if (!sensor2Triggered) { // Ensure only the first trigger is recorded

 timeSensor2 = micros(); // Record the time of sensor 2 trigger


 }

}
 Sensor2Tiggered=true;:
 }

}
```