Project 1

Real Time Image Processing

Ira A. Fulton Schools of Engineering
Arizona State University

Tasks

Project 1: test image processing functions (C and hybrid inline assembly implementations)

- Thresholding
  - Global thresholding
  - Band thresholding
  - Semi thresholding
- Gray level quantization
  - 128, 64, 32 and 16 quantization levels
- Gray level transformations
  - 3 different linear or piecewise linear transformation functions
- Histogram equalization

Tasks

Project 2: real time image processing

- Setup serial communication:
  - Hardware
  - CubeIDE project
  - MATLAB script
- Try out image processing algorithm implementations with different parameters and observe effect.

Real Time Image Processing

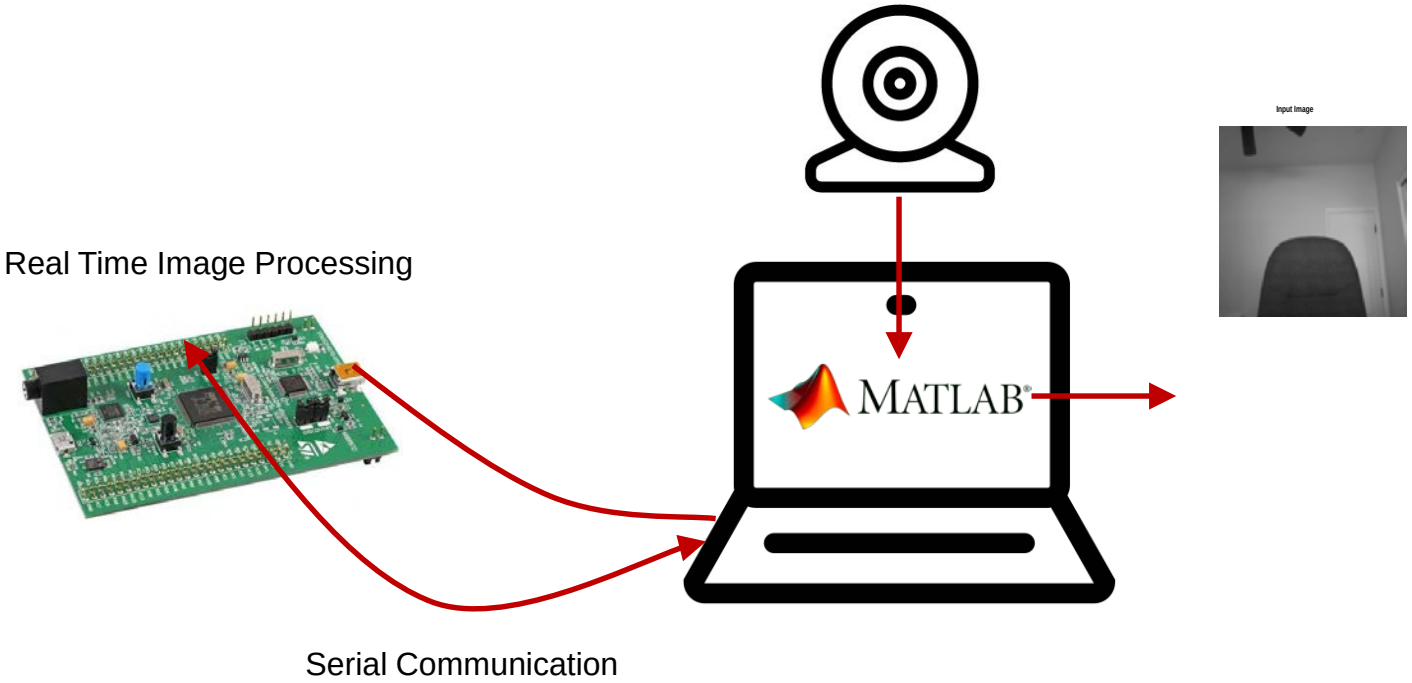

Hardware Setup

- You need two USB ports on your computer: one is for programming the board, the other is for serial communication.

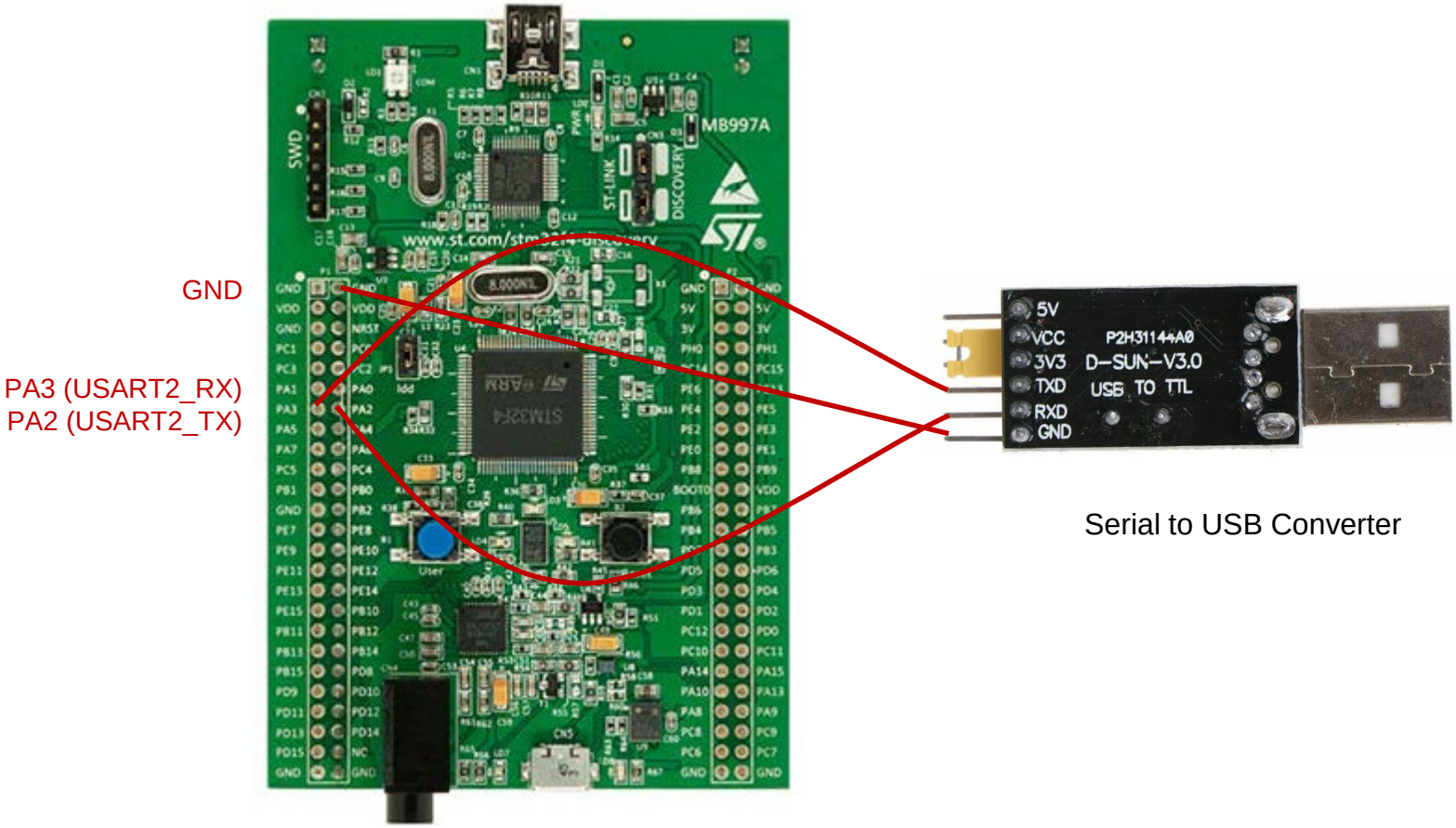

Ira A. Fulton Schools of Engineering

Arizona State University