Project 2

Applications of Fast Fourier Transform

Ira A. Fulton Schools of Engineering
Arizona State University

Tasks

Project 1: analyze vowel sounds

- Record vowel sounds
- MATLAB prototype and analysis
- Write a C function
- Learn to use CMSIS-DSP software library FFT functions

Project 2: real time spectrum analyzer

- Hardware setup
- Fill in missing code and function
- MATLAB script
- Try out different window functions and observe effect

CMSIS-DSP

- **A suite of common signal processing functions for use on Cortex-M and Cortex-A processor-based devices**
- **The library is divided into different categories such as**
  - Basic math functions
  - Complex math functions
  - Filtering functions
  - Transform functions
  - Etc.
- **A precompiled library file is used in the project:**
  - ARM CMSIS Version 4.5.0
  - CMSIS-DSP V1.4.5 b

https://arm-software.github.io/CMSIS-DSP/latest/

Real Time Spectrum Analyzer

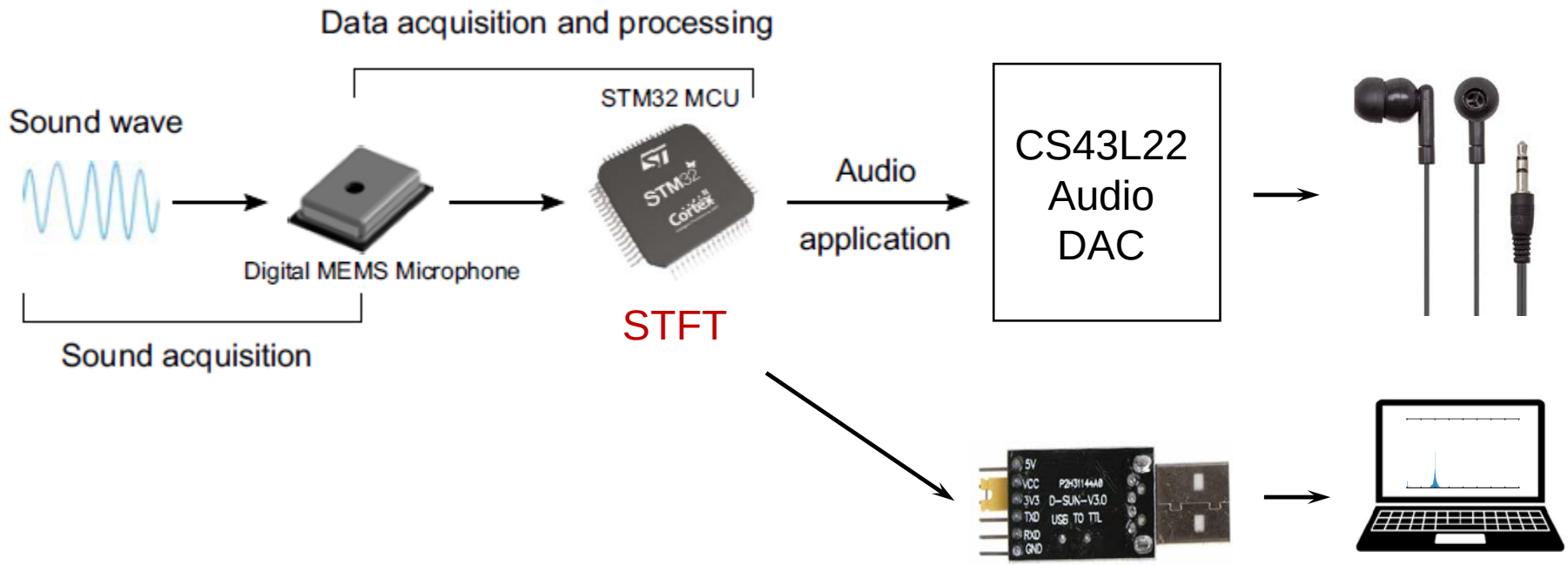

AN5027 Application note: Interfacing PDM digital microphones using STM32 MCUs and MPUs

Hardware Setup

You need two USB ports on your computer: one is for programming the board, the other is for serial communication.

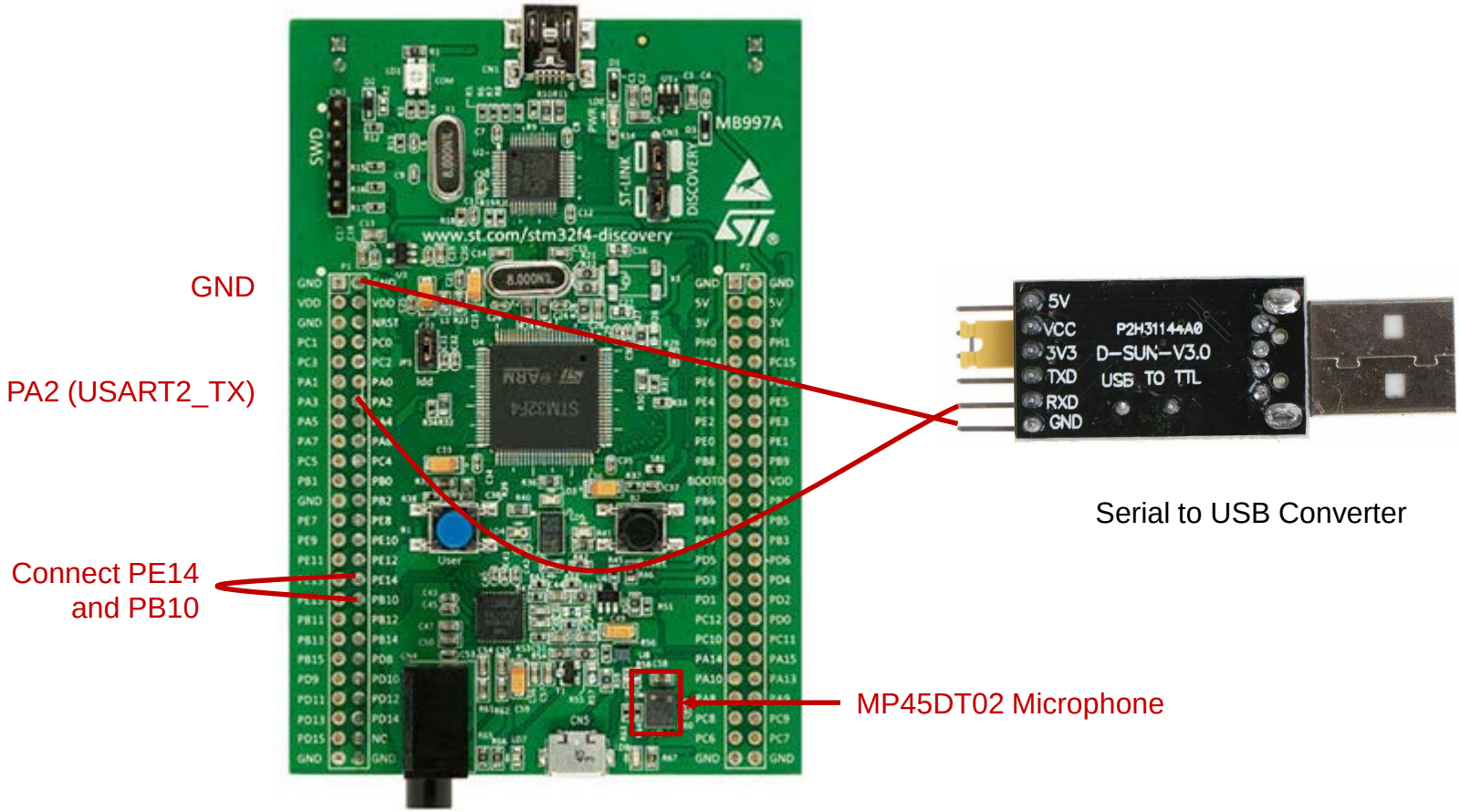

Recall: How to use DMA?

- **Initialize DMA.**
- **Start DMA.**
- **Implement interrupt callback functions to retrieve/reload data.**
  - DMA interrupts can be produced when
    - Half-transfer is reached.
    - Transfer is complete.
- **Details are in “STM32F407 Reference Manual: DMA Controller”.**

Microphone to Memory DMA

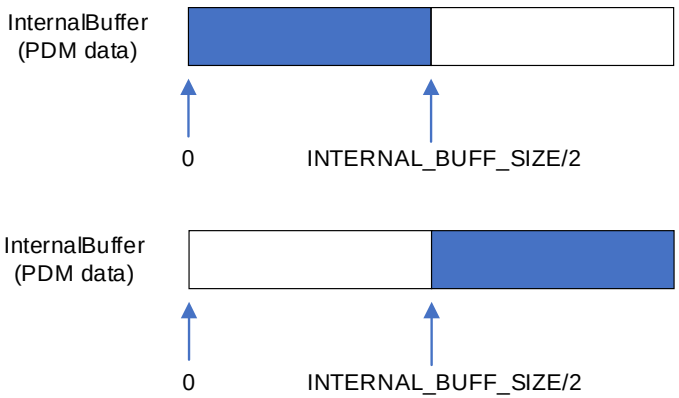

Initialize: BSP_AUDIO_IN_Init()

Start: BSP_AUDIO_IN_Record()

Callbacks:

- When the first half of buffer is filled with microphone PDM data,
  - BSP_AUDIO_IN_HalfTransfer_CallBack() is called.
- When the second half of buffer is filled with microphone PDM data,
  - BSP_AUDIO_IN_TransferComplete_CallBack() is called.
- In the callback functions, process the data.

Memory to Audio DAC DMA

- **Initialize: BSP_AUDIO_OUT_Init()**
- **Start: BSP_AUDIO_OUT_Play()**
- **Callbacks:**
  - No need to implement, let audio DAC continuously play the circular buffer.
- **Need to put audio data in the circular buffer to be played.**

Memory to UART DMA

- **Initialize: HAL_UART_Init()**
- **Start: HAL_UART_Transmit_DMA()**
- **Callbacks:**
  - No need to implement, transmit data when it is ready.
- **Need to put FFT data in the buffer to be transmitted.**

Timing Considerations

- **Microphone and I^2S are set up such that, every 1ms, one callback function (half or complete transfer) is called, PDM data is converted to PCM data, 16 samples of 16-bit of microphone audio data becomes available.**
- **The samples are accumulated into a block of 1024 samples every (1024 samples) / (16 samples / ms) = 64ms.**
- **A FFT of size 1024 is then computed.**
- **Serial transmission is initiated to transmit**
  - 512 spectrum data + 1 start flag
- **Serial transmission time:**
  - (513*8 bits) / (115200 bits/second) = 36ms

Ira A. Fulton Schools of Engineering

Arizona State University