IRA A. FULTON SCHOOLS OF ENGINEERING

Leading engineering discovery and innovative education for global impact on quality of life.

# Unit #1

# Chapter #5.1: MOS Transistor Structure & Operation

## Lecture 1

from **Microelectronic Circuits** Text

by Sedra and Smith

Oxford Publishing

ASU ARIZONA STATE UNIVERSITY

# 5.1.1. MOSFET Device Structure (n-channel MOSFET)

- **Gate (G)**
  - Controls electron carrier concentration in channel
- **Drain (D)**
  - Output terminal for carriers in induced channel
- **Source (S)**
  - Input (source) terminal for carriers in channel
- **Body (B)**
  - Body (substrate) terminal

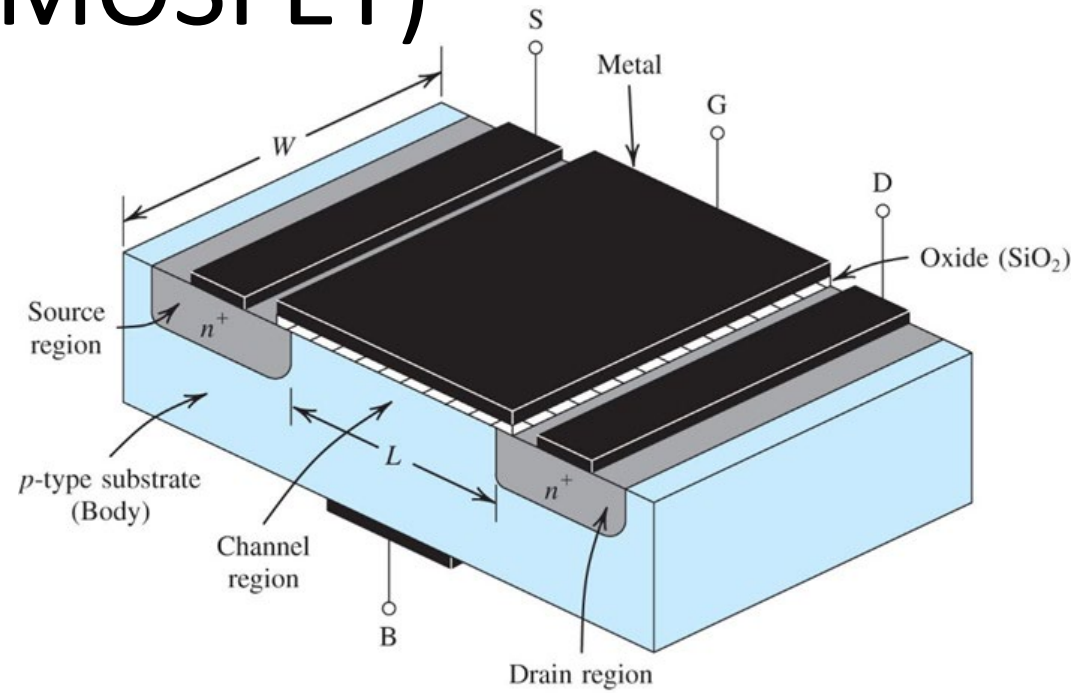


- **Gate Length (L)**
  - Length of channel between source and drain
- **Gate Width (W)**
  - Width of channel

# 5.1.3. Creating a Channel (n-channel MOSFET)

- If the gate (to source) voltage, $v_{GS}$, is increased above the other terminals (D, S, B) electrons will build up below the gate oxide
- When $v_{GS} \geq V_t$, the threshold voltage, an n-type channel is induced between S and D.
- The overdrive voltage, $V_{OV}$, is

$$v_{GS} - V_t = V_{OV}$$

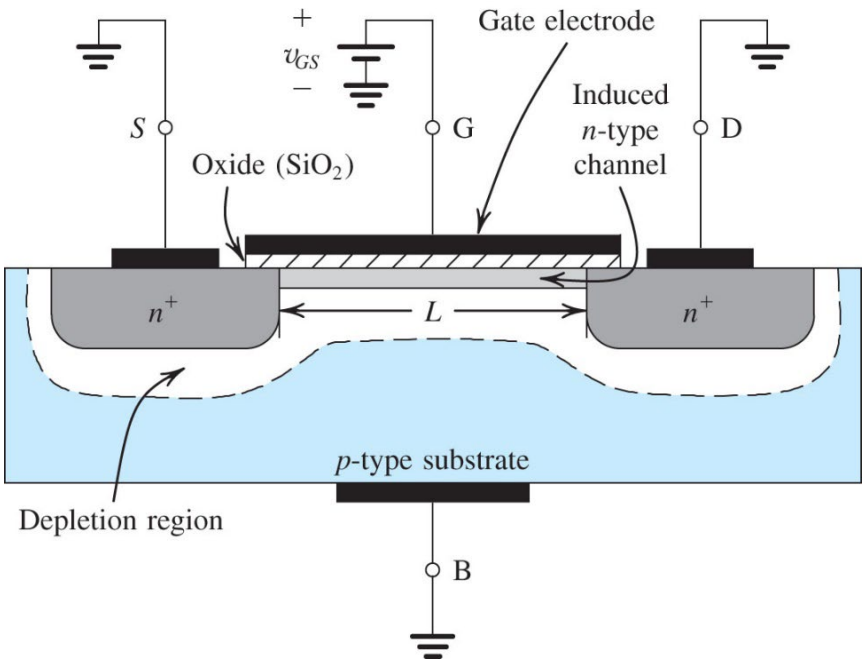

# 5.1.3. Oxide Capacitance

- The total charge in the induced channel is

$$|Q| = C_{ox}(WL)V_{OV}$$

- $C_{ox}$ is the gate oxide capacitance

$$C_{ox} = \epsilon_{ox}/t_{ox}$$

- $t_{ox}$ is the oxide thickness
- $\epsilon_{ox}$ is the permittivity of $SiO_2$

$$\epsilon_{ox} = 3.45 \times 10^{-13} \text{ F/cm}$$

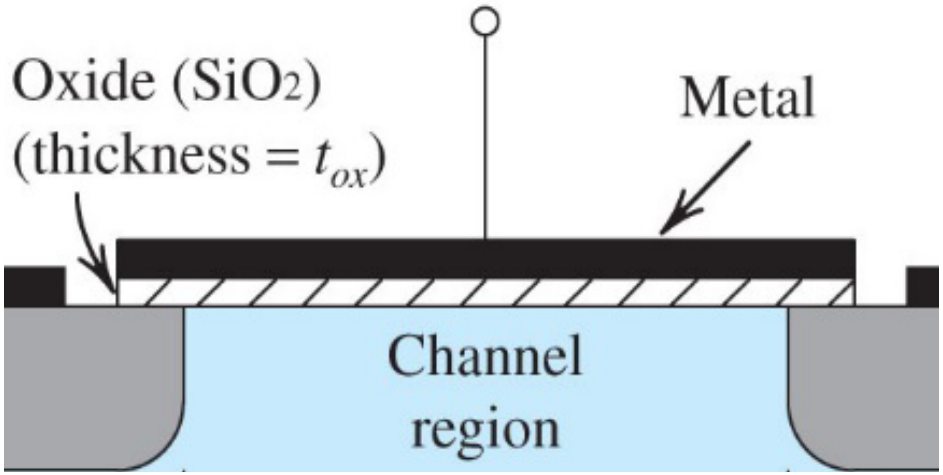

# 5.1.4. Applying Small $v_{DS}$ (n-channel MOSFET)

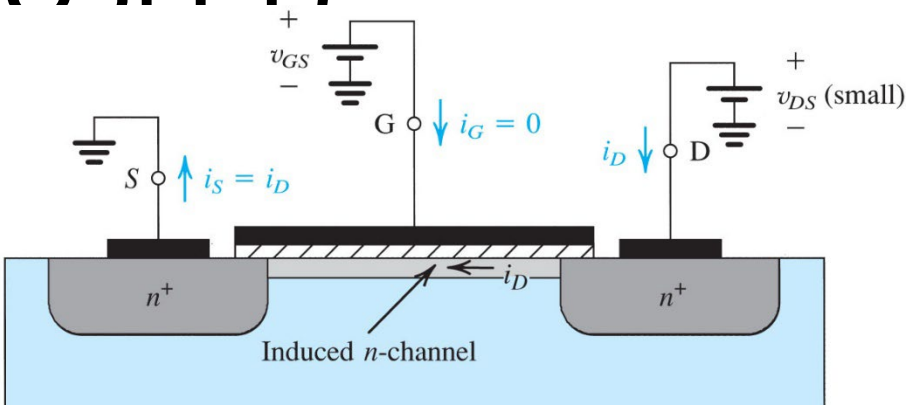


- If $v_{GS} \geq V_t$ and $0 \leq v_{DS} << V_{OV}$ positive drain current ($i_D$) will flow from D to S
- This condition is known as the linear region (or deep triode)

$$i_D = [k_n'(W/L)V_{OV}]v_{DS}$$

- $k_n'$ is large signal transconductance

$$k_n' = u_n C_{ox}$$

- $u_n$ is electron mobility [$cm^2/Vs$]
- The scaled transconductance is

$$k_n = k_n'(W/L)$$

# 5.1.4. Channel Resistance in Linear Region

- The proportional relationship between $i_D$ and $v_{DS}$ means the channel acts like a resistor
- This channel resistance, $r_{DS}$ is

$$r_{DS} = v_{DS}/i_D = 1/(k_n V_{OV})$$

so it <u>decreases</u> as $v_{GS}$ is increased

- The channel conductance, $g_{DS}$ is

$$g_{DS} = 1/\ r_{DS} = k_n V_{OV} = k_n(v_{GS}-V_t)$$

so it <u>increases</u> with $v_{GS}$

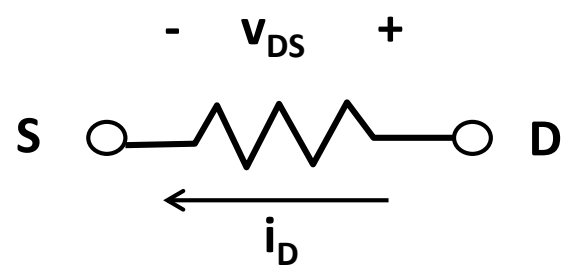


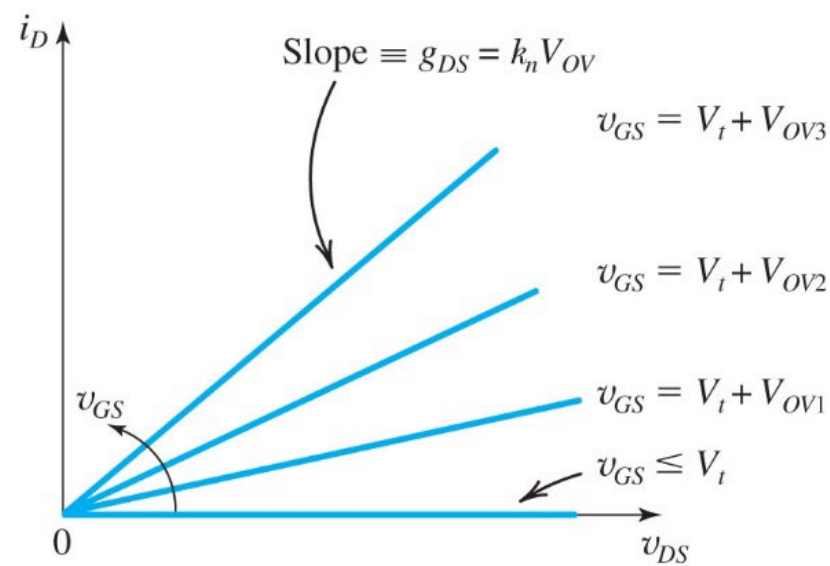

# 5.1.5. Full Triode Region Response (n-channel)

- If $v_{GS} \geq V_t$ and $0 \leq v_{DS} \leq V_{OV}$ the transistor is in the triode region
- But as $v_{DS}$ increases up to Vov, the channel begins to "pinch off" near the drain
- This causes $i_D$ to bend until it becomes almost flat ($di_D/dv_{DS} \approx 0$) when

$$v_{DS} = V_{DSsat} = V_{OV}$$

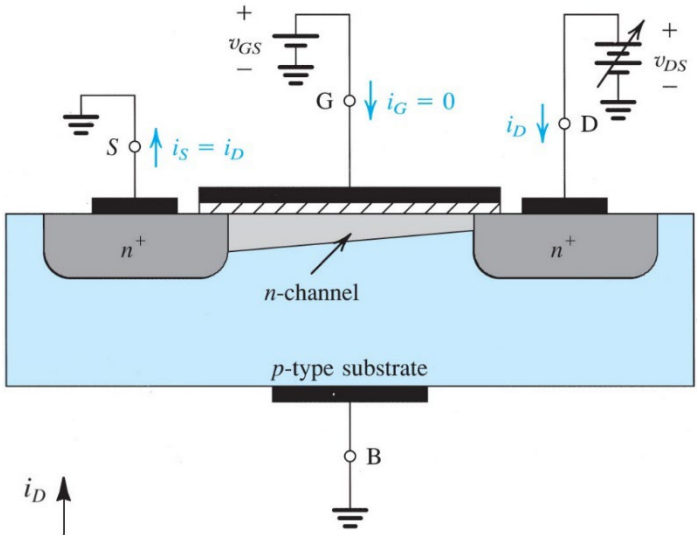


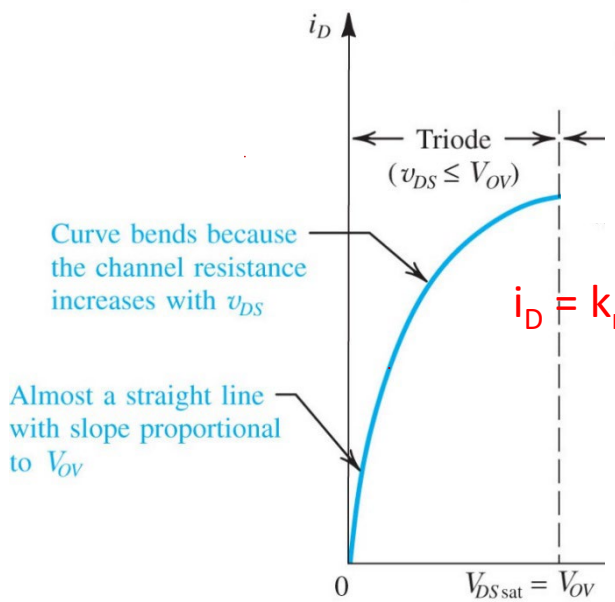


$$i_D = k_n(V_{OV}v_{DS} - v_{DS}^2/2)$$

# 5.1.6. Channel Pinch-off and Current Saturation (n-channel)

- If $v_{GS} \geq V_t$ and $v_{DS} \geq V_{OV}$ transistor is in the saturation region
- In this region the channel is completely "pinched-off" at drain

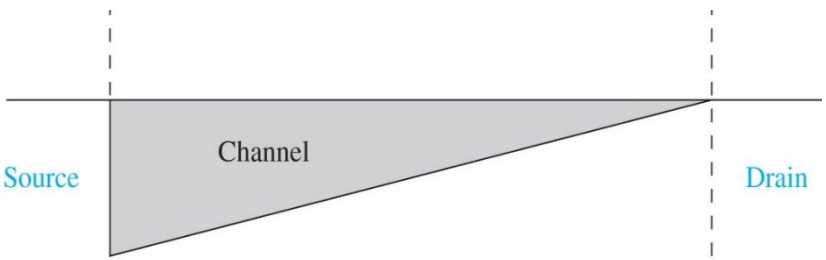


- So for $v_{DS} \geq V_{DSsat} = V_{OV}$ $i_D$ is <u>ideally constant</u> and equal to

$$i_D = k_n V_{OV}^2/2 = k_n(v_{GS}-V_t)^2/2$$

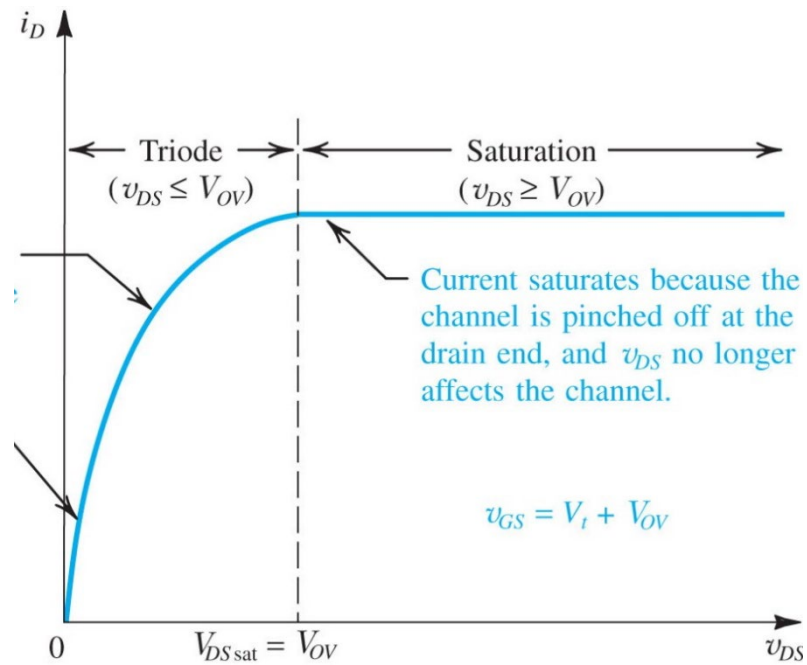

# 5.1.7. p-channel MOSFET

- P-channel device structure is identical to n-channel except:

  drain and source are p-type
  substrate is n-type

- N-channels and p-channel are complementary devices, when used on same integrated circuit, it's complementary-MOS, CMOS.

- Positive $i_D$ flows from S to D when

  $v_{GS} < V_{tp} < 0V$ or $v_{SG} > |V_{tp}|$

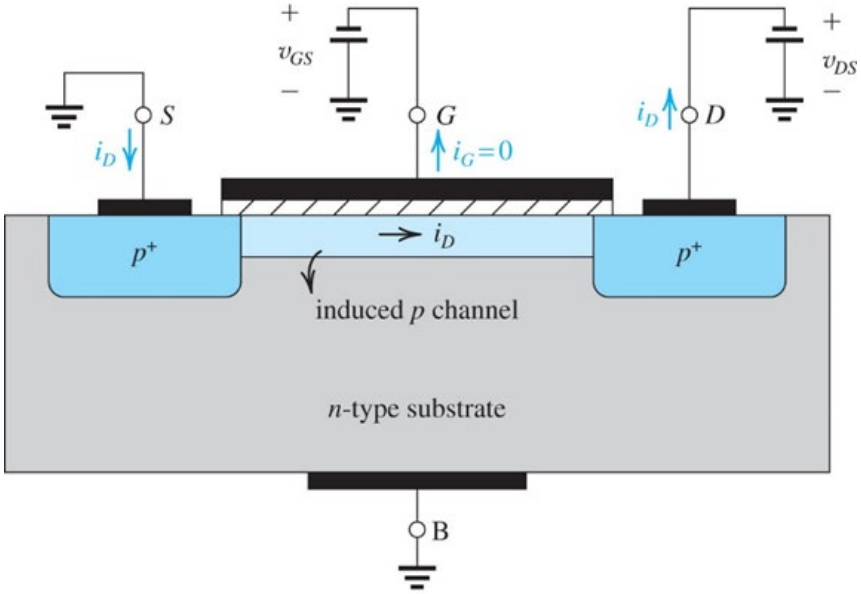


- $k_p'$ is large signal transconductance

  $k_p' = u_p C_{ox}$

- $u_p$ is hole mobility

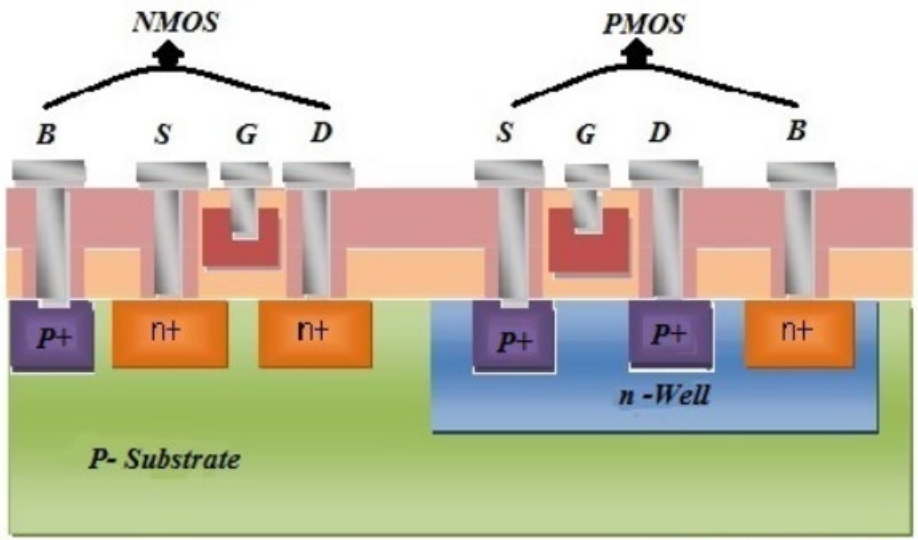


©Elprocus.com

Doesn't have to be VSS

Isolated NMOS Device

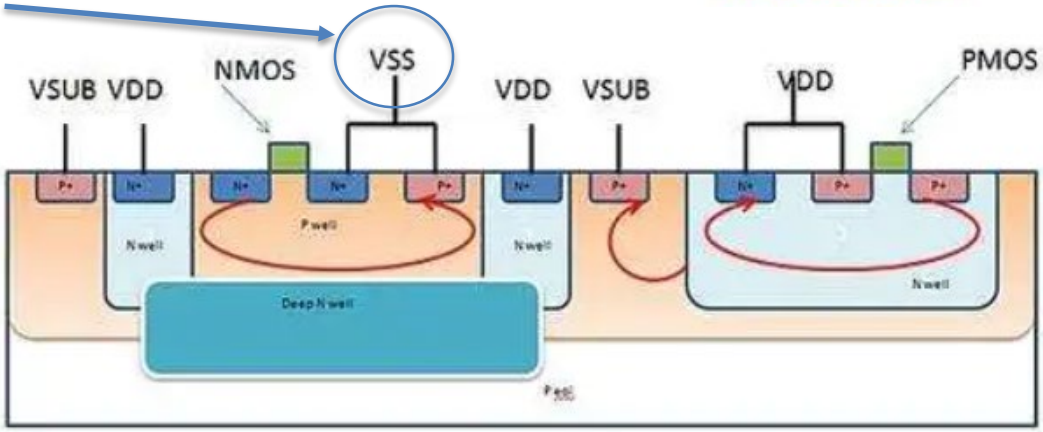


+ Isolated Body for NMOS (Body Effect)
+ Noise not injected into substrate
- More area

Planet Analog -ESSDRC 2012