Unit #2
Chapter #17.2: Transistor Sizing
Lecture 10

from **Microelectronic Circuits** Text
by Sedra and Smith
Oxford Publishing

17.2 **General Rules for Sizing**

- We want all CMOS logic gates to have an intrinsic propagation delay that is less that or equal to the smallest inverter we can make in the technology

- Smallest inverter

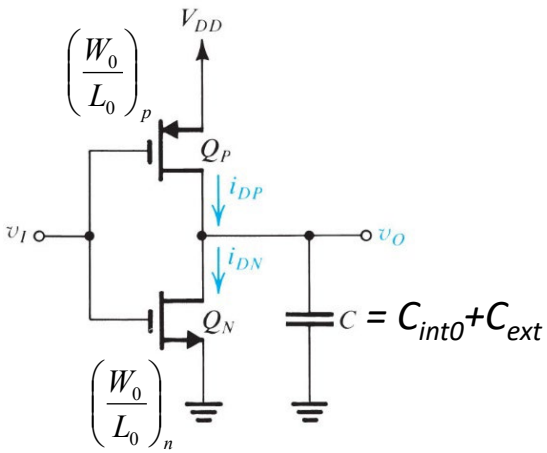

"0" denotes the value is specific to the smallest inverter

- Choosing L_0
  - We saw in Method 2 (lecture 9) that channel resistance (R_N and R_P) was made smaller by keeping L as small a possible
  - So should we choose L_0 to be the minimum length for the technology (L_{min})?
  - How does L impact the capacitive load?

17.2.1 **Capacitance Sizes**

- Recall from lecture 9

$$C_{int} = 2C_{gd1} + 2C_{gd2} + C_{db1} + C_{db2}$$

now

$$C_{gd1}, C_{db1} \propto W_n$$

$$C_{gd2}, C_{db2} \propto W_p$$

$$C_{int} = \beta_n W_n + \beta_p W_p$$

Scales with inverter transistor widths

but

$$C_{ext} = C_w + C_{g3} + C_{g4}$$

$$C_{g3} \propto W_n L_n$$

$$C_{g4} \propto W_p L_p$$

Scales with inverter transistor width X length

So we can reduce C and decrease propagation delay by keeping $L_0 = L_{min}$ … in fact we will do this for all transistors in all gates!

17.2.1 **Sizing Smallest Inverter**

- Choosing W_0
  - We have seen that it is mostly good to have Q_n and Q_p matched, especially for noise margin so let's set

$$\frac{W_{0,p}}{W_{0,n}} = \frac{k_n'}{k_p'}$$

Note: this is not necessarily optimum for speed, but let's just keep this as our rule for inverters

  - Now we really want the input capacitance of smallest inverter to be as small as possible so this means

$$W_{0,n} = W_{\min}$$

$$and$$

$$W_{0,p} = \frac{k_n'}{k_p'} W_{\min}$$

So now we have the sizes for our smallest inverter

17.2.1 **Propagation Delay For Smallest Inverter**

- We use Method 2 to get

$$t_{PO} = 0.69 R_{eq,0}\left(C_{int,0} + C_{ext}\right) = 0.69\left(R_{eq,0}C_{int,0} + R_{eq,0}C_{ext}\right)$$

$$where$$

$$R_{eq,0} = \frac{R_{N0} + R_{P0}}{2}$$

Intrinsic RC for smallest inverter

This could be BIG!
… not good for speed

- Also with Method 2 we know

$$R_{N0} = \frac{\chi_n}{W_{0,n}}$$

$$and$$

$$R_{P0} = \frac{\chi_p}{W_{0,p}}$$

17.2.1 **Inverter Sizing**

- We have just seen how we size our smallest inverter, but do we want all inverters in a circuit to be that small?

  Answer: In general NO … since inverters may have to drive large external capacitors (C_{ext})

- Inverter Scaling
  - We increase the size of an inverter by scaling the smallest inverter up by S, this is call the <u>fan-out</u>.

$$S = \frac{W_p}{W_{0,p}} = \frac{W_n}{W_{0,n}}$$

But we only scale the widths since we want to keep $L_p = L_n = L_{min}$

17.2.1 **Propagation Delay For "Scaled Up" Inverter**

- By increasing the size of an inverter, we reduced the delay penalty for driving large C_{ext} … how?

$$R_N = \frac{\chi_n}{W_n} = \frac{\chi_n}{SW_{0,n}} = \frac{R_{N0}}{S}$$

and

$$R_P = \frac{\chi_p}{W_p} = \frac{\chi_p}{SW_{0,p}} = \frac{R_{P0}}{S}$$

$$R_{eq} = \frac{R_N + R_P}{2} = \frac{1}{S}\frac{R_{N0} + R_{P0}}{2} = \frac{R_{eq,0}}{S}$$

AND

$$C_{int} = B_n W_n + B_p W_p = S\left(B_n W_{0,n} + B_p W_{0,p}\right) = SC_{int,0}$$

$$t_P = 0.69 R_{eq}\left(C_{int} + C_{ext}\right) = 0.69\frac{Req,0}{S}\left(SC_{int,0} + C_{ext}\right) = 0.69\left(R_{eq,0}C_{int,0} + R_{eq,0}\frac{C_{ext}}{S}\right)$$

Reduced size of external RC without changing the intrinsic RC .. MAGIC!

17.2.4 **Inverter Chains … Fan**

- But be careful … we don't just want big inverters because they present too high of input capacitance to input signals
- Inverter Chain Sized for Performance

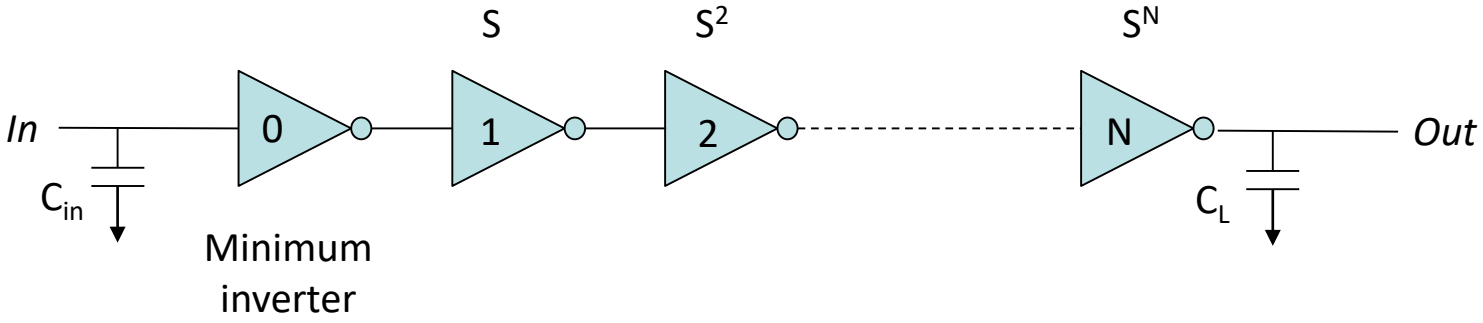

Fan-out factor, S, determined by number of inverters in chain and ratio C_L/C_{in}

.. very cool but for deeper investigation of this you need to take EEE 425 ☺

17.2.2 **Sizing General CMOS Gates**

- Recall, we said earlier that we want all CMOS logic gates to have an intrinsic propagation delay that is less than or equal to the smallest inverter for the technology
- Note: in some cases we just need to match a larger reference inverter, not the smallest

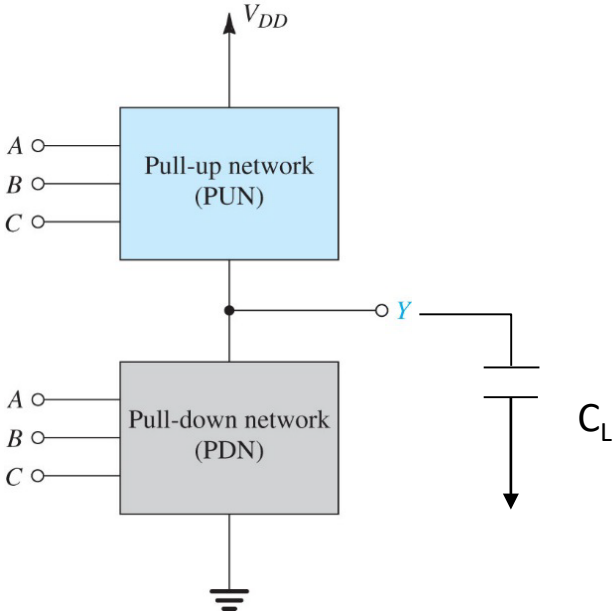

$$t_{PHL\max}(PDN) = t_{PHL}(inv)$$

$$t_{PLH\max}(PUN) = t_{PLH}(inv)$$

Assume the C_L is the same for the general gate and reference inverter

17.2.2 **Sizing General CMOS Gates**

$$t_{PHL\max}(PDN) = 0.69 R_{N\max}(PDN) C_L$$

so

$$R_{N\max}(PDN) = R_N(inv)$$

R_{nmax} is the path with the greatest number (r) of NMOS in series

and

$$t_{PLH\max}(PUN) = 0.69 R_{P\max}(PUN) C_L$$

so

$$R_{P\max}(PUN) = R_P(inv)$$

R_{pmax} is the path with the greatest number (q) of PMOS in series

17.2.2 **Sizing of worst case resistance in PDN**

$$R_N(inv) = R_{N\max}(PDN) = \sum_{i=1}^{r} R_N$$

$$\frac{\chi_n}{W_n(inv)} = \chi_n \sum_{i=1}^{r} \frac{1}{W_{n,i}} = \chi_n \sum_{i=1}^{r} \frac{1}{W_n}$$

All $W_{n,i}$ in the series will be the same size

so

$$W_n(inv) = \frac{W_n}{r}$$

Remember, L is most likely always set to L_{min}

and

$$r = \frac{W_n}{W_n(inv)}$$

17.2.2 **Sizing of worst case resistance in PUN**

$$R_P(inv) = R_{P\max}(PUN) = \sum_{i=1}^{q} R_P$$

$$\frac{\chi_p}{W_p(inv)} = \chi_p \sum_{j=1}^{q} \frac{1}{W_{p,i}} = \chi_p \sum_{j=1}^{q} \frac{1}{W_p}$$

All $W_{p,i}$ in this series will be the same size

so

$$W_p(inv) = \frac{W_p}{q}$$

and

$$q = \frac{W_p}{W_p(inv)}$$

17.2.2 **Simple Example: 4-input NOR and NAND**

4-NOR

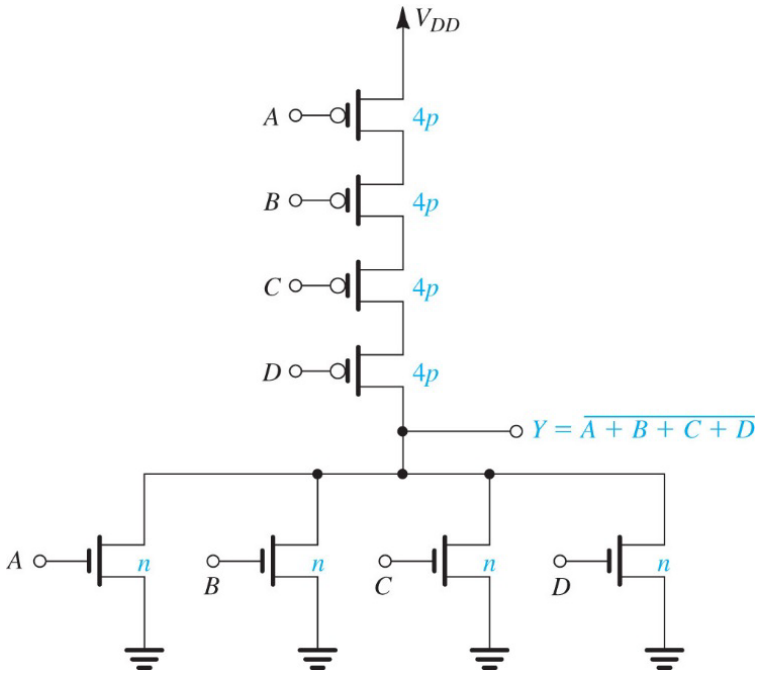

4-NAND

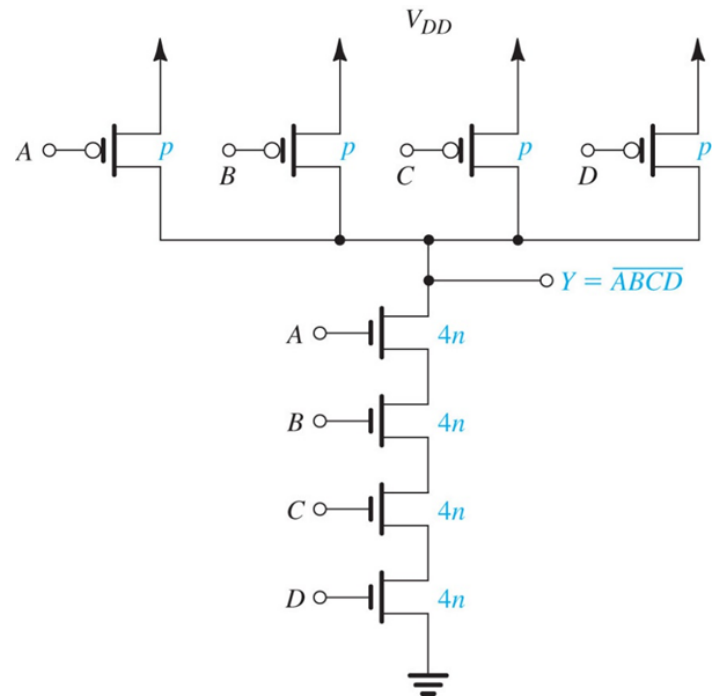

In the case r = 1 and q = 4

In the case r = 4 and q = 1

Note: "p" and "n" are used in book to denote W (or W/L) of the PMOS and NMOS, respectively, in the reference inverter … don't let it confuse you

Reference Inverter NMOS $(W/L)_{REF}$ = 1.5 (ratio)

Be aware of using either ratios or actual widths and lengths.

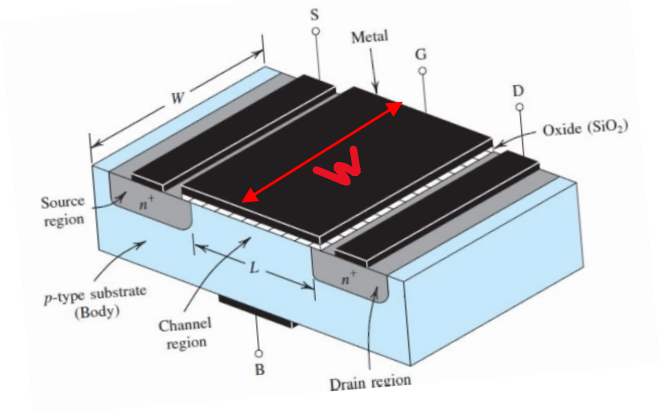

Assume 0.25um technology

L_{REF} = 0.25 um
W_{REF} = 0.375 um

3 Series NMOS $(W/L)_{ABC}$ = 3* $(W/L)_{REF}$ = 4.5 (ratio)

L_{ABC} = 0.25 um
W_{ABC} = 1.125 um

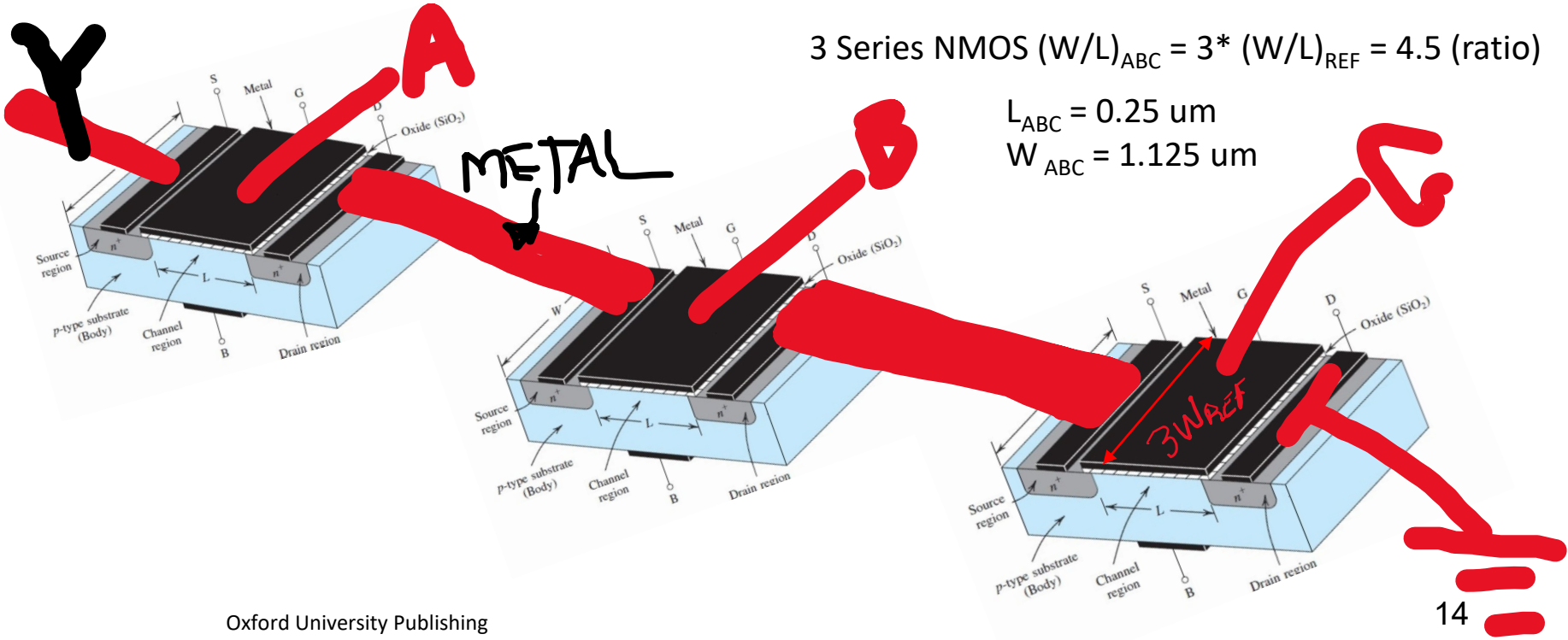

2-INPUT NAND Gate

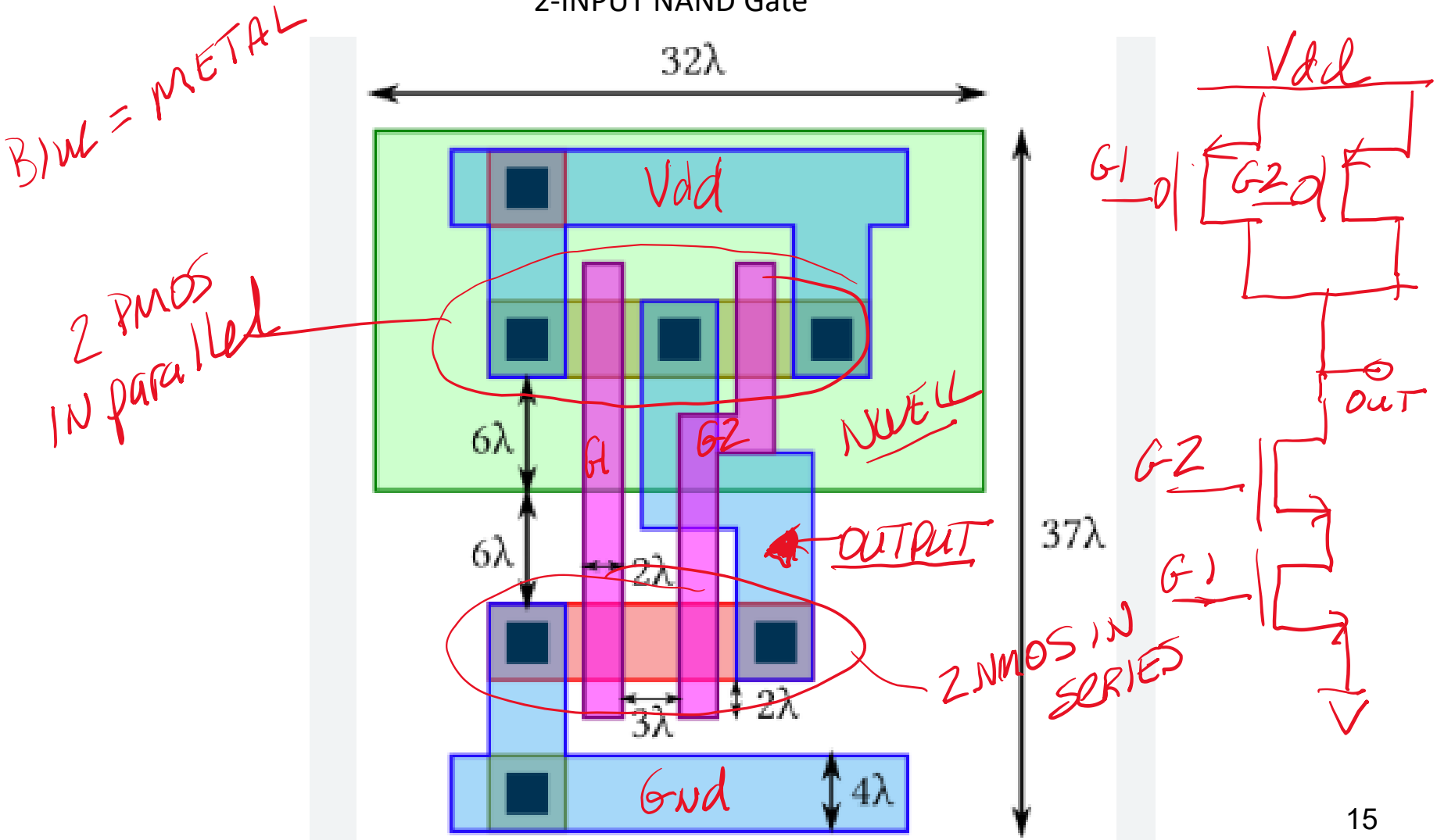

electronics.stackexchange.com