Example 17.4 (different numbers)

$Y = \overline{A + B(C+D)}$

Assume L = L_{min} = 0.25 um for all transistors. What are the W's for the logic below if the reference inverter transistors are: $W_n = 1.5\ L_{min}$ and $W_p = 5\ L_{min}$?

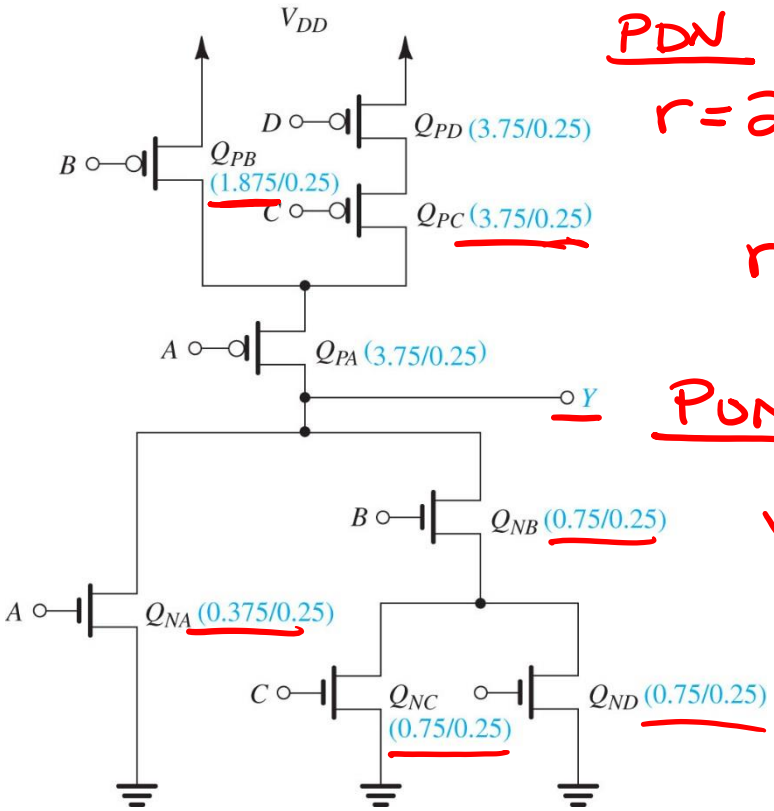

PDN Worst case Q_{NB} and Q_{NC} or Q_{ND}

$r = 2$ $W_{NB} = W_{NC} = W_{ND} = 2 \cdot 1.5\ L_{min} = 0.75\ \mu m$

$r = 1$ $W_{NA} = W_n = 1.5 L_m = 0.375\ \mu m$

PUN Worst $Q_{PA}, Q_{PC}, Q_{PD} \rightarrow q = 3$

$W_{PA} = W_{PC} = W_{PD} = 3 \cdot 5 L_{min} = 15 L_{min} = 3.75\ \mu m$

$\frac{1}{W_P} = \frac{1}{W_{PA}} + \frac{1}{W_{PB}}$ $R_P = \frac{r_P}{W}$

$\frac{1}{5} = \frac{1}{\cancel{3.75}\ 15} + \frac{1}{W_{PB}}$

$\rightarrow W_{PB} = 7.5 L_{min} = 1.875\ \mu m$

$7.5 \times L_{min}$

0.25

Example 17.5 (modified)

Assume 250nm = L_{min}

The smallest inverter in a technology has a (W/L)n = 1 and (W/L)p = 2. If C_{int0} = 10 fF and C_{ext} = 1pF. What is t_p? If the size or the inverter is increase by 2.5, what is the new t_p? By what factor have you increased the input capacitance of the inverter?

t_p

Method 2 $\Rightarrow t_p = 0.69 R_{eq0}(C_{int0} + C_{ext})$

$$R_{eq0} = \frac{R_{N0} + R_{P0}}{2} = \frac{1}{2}\left[\frac{12.5k}{(W/L)_n = 1} + \frac{30k}{2 = (W/L)_p}\right] = 13.75k\Omega$$

$$t_p = 0.69(13.75k\Omega)(1.01 \times 10^{-12}) = 9.6ns$$

t_{ps}

$$t_{ps} = 0.69 R_{eq0}\left(C_{int0} + \frac{C_{ext}}{S}\right) = 0.69 \cdot 13.75k\Omega(10fF + 400fF)$$

$$= 3.9ns$$

$$\frac{C_{ins}}{C_{in0}} = \frac{C_{gps} + C_{gns}}{C_{gp0} + C_{gn0}} = \frac{\cancel{C_{ox} \cdot L_{min}(W_{p0} + W_{n0})}S}{\cancel{C_{ox} \cdot L_{min}(W_{p0} + W_{n0})}}$$

$$\frac{C_{ins}}{C_{in0}} = S$$