# A Brief Sidebar ……

# A “Glance” at Digital Design

# Digital Design – Tools & Flow

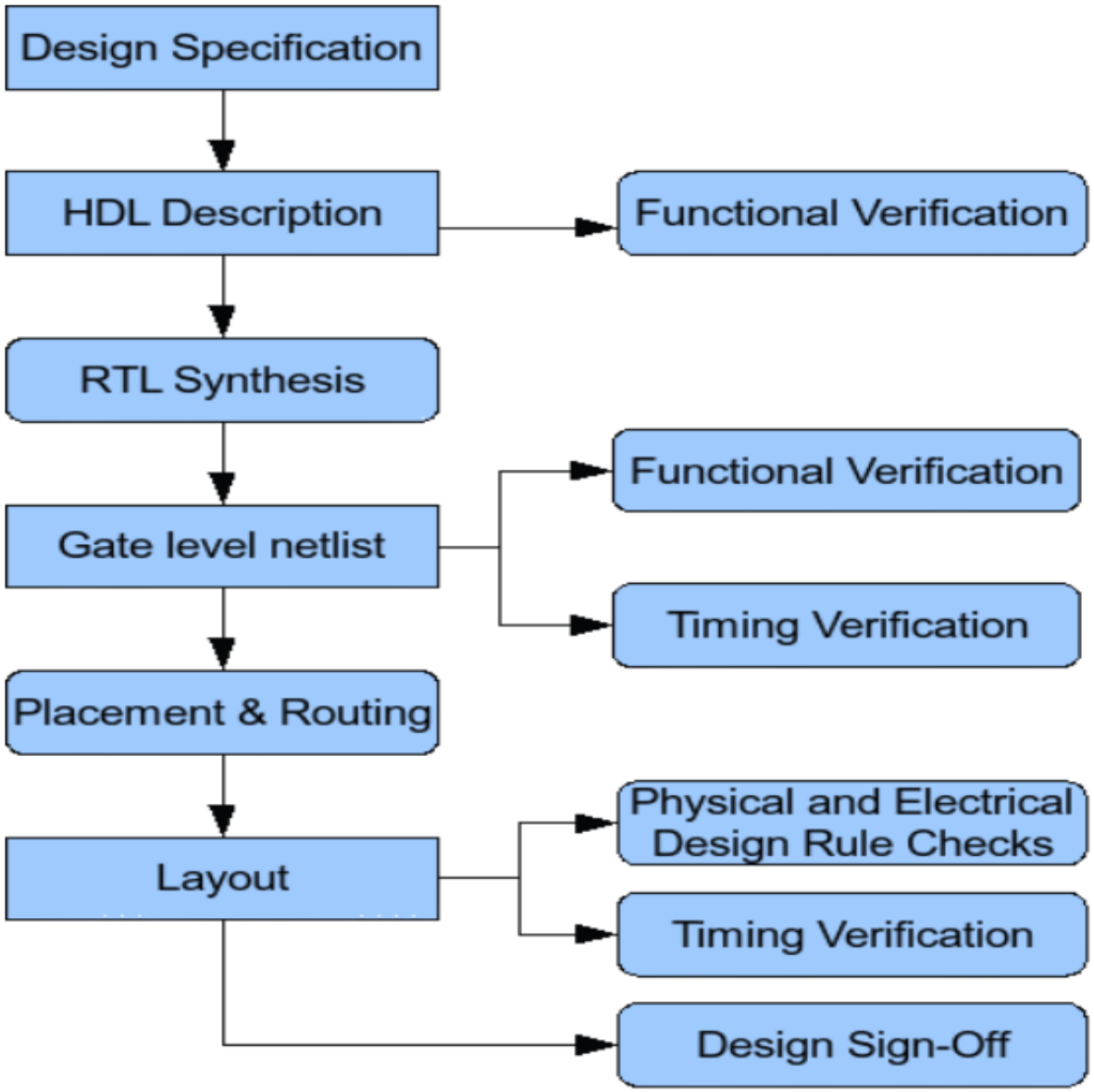

# Digital Design – Verilog Counter Design

## (from Chip Verify)

**Verilog Code**

```
module ctr (input                up_down,
                                 clk,
                                 rstn,
            output reg [2:0]     out);

    always @ (posedge clk)
        if (!rstn)
            out <= 0;
        else begin
            if (up_down)
                out <= out + 1;
            else
                out <= out - 1;
        end
endmodule
```

GeeksforGeeks.org

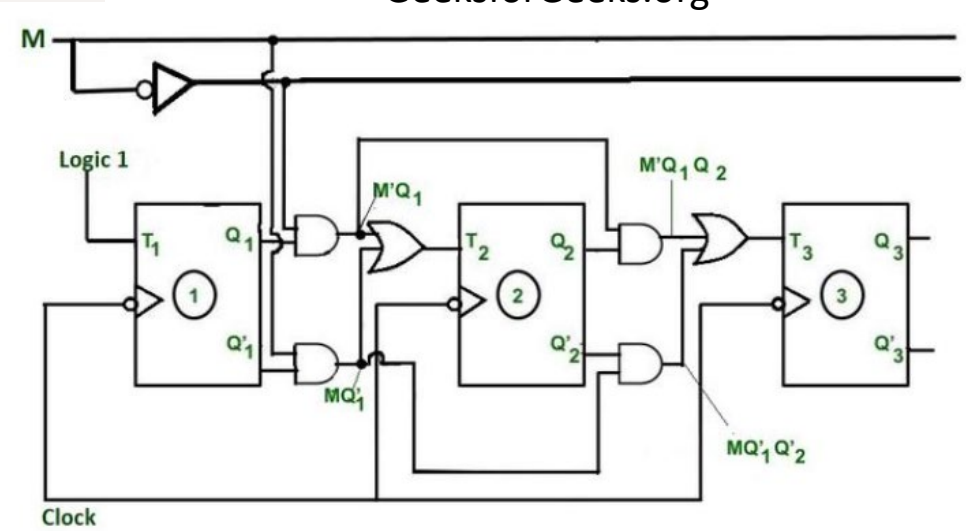


*3 bit synchronous up/down counter.*

# Design Synthesis

# Digital Design – TSMC 0.25um Library – From Virginia Tech

Dong S. Ha, Professor
VTVT (Virginia Tech VLSI for Wireless Communications) Lab
Bradley Department of Electrical and Computer Engineering
Virginia Tech
Blacksburg, Virginia 24061
ha@vt.edu, http://www.ee.vt.edu/ha

This file lists the 83 cells in the cell library distributed in the VTVT 0.25 µm Standard Cell Library, Release 2:

| Cell Name | Function |
|---|---|
| buf_[1,2,4] | Noninverting buffer, drive strength 1, 2, or 4 |
| inv_[1,2,4] | Inverter, drive strength 1, 2 or 4 |
| and2_[1,2,4] | 2-input AND gate, drive strength 1, 2, or 4 |
| and3_[1,2,4] | 3-input AND gate, drive strength 1, 2, or 4 |
| and4_[1,2,4] | 4-input AND gate, drive strength 1, 2, or 4 |
| or2_[1,2,4] | 2-input OR gate, drive strength 1, 2, or 4 |
| or3_[1,2,4] | 3-input OR gate, drive strength 1, 2, or 4 |
| or4_[1,2,4] | 4-input OR gate, drive strength 1, 2, or 4 |
| nand2_[1,2,4] | 2-input NAND gate, drive strength 1, 2, or 4 |
| nand3_[1,2,4] | 3-input NAND gate, drive strength 1, 2, or 4 |
| nand4_[1,2,4] | 4-input NAND gate, drive strength 1, 2, or 4 |
| nor2_[1,2,4] | 2-input NOR gate, drive strength 1, 2, or 4 |
| nor3_[1,2,4] | 3-input NOR gate, drive strength 1, 2, or 4 |
| nor4_[1,2,4] | 4-input NOR gate, drive strength 1, 2, or 4 |
| xor2_[1,2] | 2-input XOR gate, drive strength 1 or 2 |
| xnor2_[1,2] | 2-input XNOR gate, drive strength 1 or 2 |
| mux2_[1,2,4] | 2-to-1 multiplexer, drive strength 1, 2, or 4 |
| mux3_2 | 3-to-1 multiplexer, drive strength 2 |
| mux4_2 | 4-to-1 multiplexer, drive strength 2 |
| ABnorC | (ip1*ip2+ip3)', drive strength 1 |
| ABorC | ip1*ip2+ip3, drive strength 1 |
| ab_or_c_or_d | ip1*ip2+ip3+ip4, drive strength 1 |
| not_ab_or_c_or_d | (ip1*ip2+ip3+ip4)', drive strength 1 |
| dec2_4 | 2 to 4 decoder, drive strength 1 |
| dec3_8 | 3 to 8 decoder, drive strength 1 |
| fulladder | One-bit ripple-carry adder, drive strength 1 |
| bufzp_2 | noninverting tristate buffer, low-enabled, drive strength 2 |
| invzp_[1,2,4] | inverting tristate buffer, low-enabled, drive strength 1, 2, or 4 |
| cd_8 | clock driver, drive strength 8 |
| cd_12 | clock driver, drive strength 12 |
| cd_16 | clock driver, drive strength 16 |
| lp_[1,2] | high-active D latch, drive strength 1 or 2 |
| lrp_[1, 2, 4] | high-active D latch with asynchronous low-active reset and drive strength 1, 2, or 4 |
| lrsp_[1, 2, 4] | high-active D latch with asynchronous low-active reset and asynchronous high-active set, drive strength 1, 2, or 4 |
| dp_[1,2,4] | rising-edge triggered D flip-flop (with 1, 2, or 4 drive strength) |
| drp_[1,2,4] | rising-edge triggered D flip-flop with asynchronous low-active reset (1, 2, or 4 drive strength) |
| drsp_[1,2,4] | rising-edge triggered D flip-flop with asynchronous low-active reset and asynchronous high-active set |
| dksp_1 | rising-edge triggered D flip-flop with asynchronous active high set and extra inverted output. |
| dtsp_1 | rising-edge triggered D flip-flop with asynchronous active high set input and serial scan input. |
| dtrsp_2 | rising-edge triggered D flip-flop with asynchronous low-active reset, asynchronous high-active set, and serial scan input |
| jkrp_2 | rising-edge triggered JK flip-flop with asynchronous active-low reset and extra inverted output, drive strength 2. |
| filler | filler cell (empty cell with power and ground rails and nwell) |

# Digital Design – Verilog Counter Design
## (from Chip Verify)

**Auto Place & Route Digital**

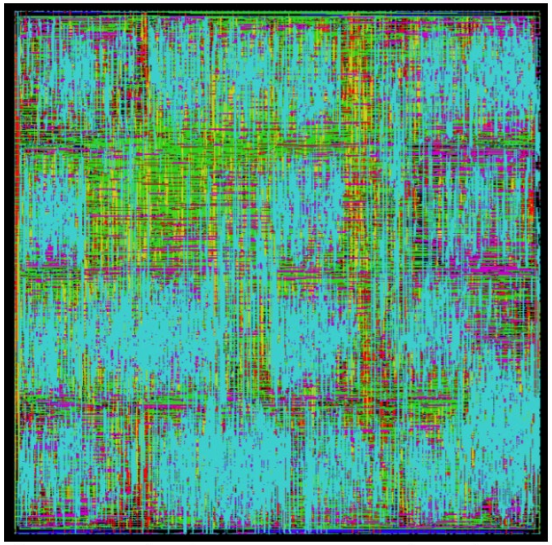

Figure 6: Routed Design. Image Courtesy: Andrew Kahng, UCSD

From AnySilicon Website

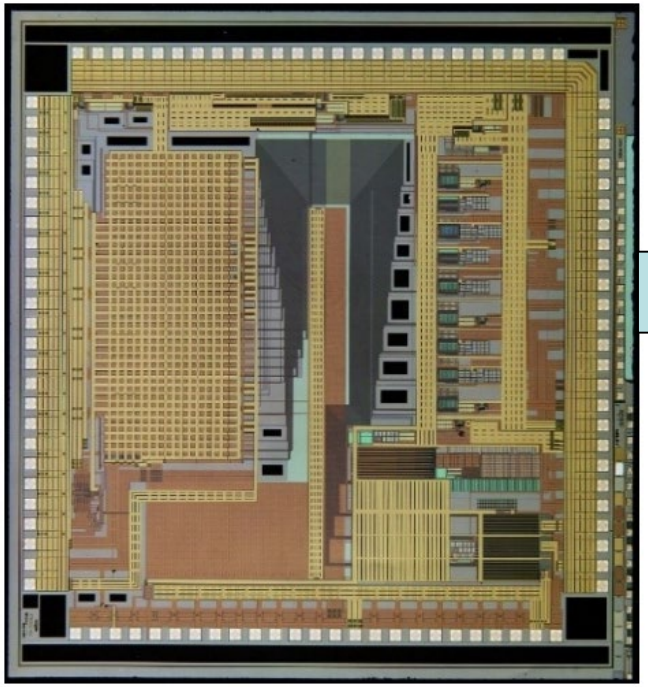

Figure 7: FRICO ASIC, 350 nm technology

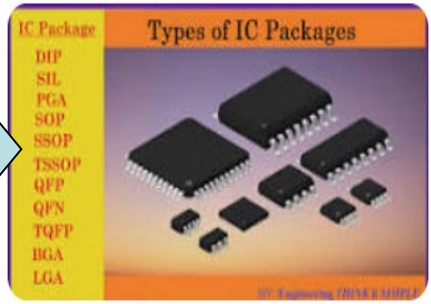


Engineering Think It Simple

# EEE 333 – Hardware Design Languages (HDL) & Programmable Logic

# Unit #2
# Chapter #17.3: Power Dissipation
## Lecture 11

from **Microelectronic Circuits** Text
by Sedra and Smith
Oxford Publishing

# Process Technology - Scaling

**Table G.1** Typical Values of CMOS Device Parameters

| | 0.8 μm | | 0.5 μm | | 0.25 μm | | 0.18 μm | | 0.13 μm | | 65 nm | | 28 nm | |
|---|---|---|---|---|---|---|---|---|---|---|---|---|---|---|
| Parameter | NMOS | PMOS | NMOS | PMOS | NMOS | PMOS | NMOS | PMOS | NMOS | PMOS | NMOS | PMOS | NMOS | PMOS |
| $t_{ox}$ (nm) | 15 | 15 | 9 | 9 | 6 | 6 | 4 | 4 | 2.7 | 2.7 | 1.4 | 1.4 | 1.4 | 1.4 |
| $C_{ox}$ (fF/μm$^2$) | 2.3 | 2.3 | 3.8 | 3.8 | 5.8 | 5.8 | 8.6 | 8.6 | 12.8 | 12.8 | 25 | 25 | 34 | 34 |
| $\mu$ (cm$^2$/V·s) | 550 | 250 | 500 | 180 | 460 | 160 | 450 | 100 | 400 | 100 | 216 | 40 | 220 | 200 |
| $\mu C_{ox}$ (μA/V$^2$) | 127 | 58 | 190 | 68 | 267 | 93 | 387 | 86 | 511 | 128 | 540 | 100 | 750 | 680 |
| $V_{t0}$ (V) | 0.7 | –0.7 | 0.7 | –0.8 | 0.5 | –0.6 | 0.5 | –0.5 | 0.4 | –0.4 | 0.35 | –0.35 | 0.3 | –0.3 |
| $V_{DD}$ (V) | 5 | 5 | 3.3 | 3.3 | 2.5 | 2.5 | 1.8 | 1.8 | 1.3 | 1.3 | 1.0 | 1.0 | 0.9 | 0.9 |
| $\lvert V'_A \rvert$ (V/μm) | 25 | 20 | 20 | 10 | 5 | 6 | 5 | 6 | 5 | 6 | 3 | 3 | 1.5 | 1.5 |
| $C_{ov}$ (fF/μm) | 0.2 | 0.2 | 0.4 | 0.4 | 0.3 | 0.3 | 0.37 | 0.33 | 0.36 | 0.33 | 0.33 | 0.31 | 0.4 | 0.4 |

# 17.3.1 **Source of Power Dissipation**

- There are two classifications of power dissipation

1. **Static** – refers to power dissipated when input and output (and currents) **ARE NOT** changing
2. **Dynamic** - refers to power dissipated when input and output (and currents) **ARE** switching

# 17.3.1 **Static Power**

- Normally static power is determined by the current-voltage product from $V_{DD}$ to ground when the <u>input is either high ($V_{DD}$) or low (0V)</u> …

- … but when $v_I$ is either $V_{DD}$ or 0V, $i_{Dp} = i_{Dn} = 0A$

- So for CMOS inverters, the static power, dissipated is 0 W!

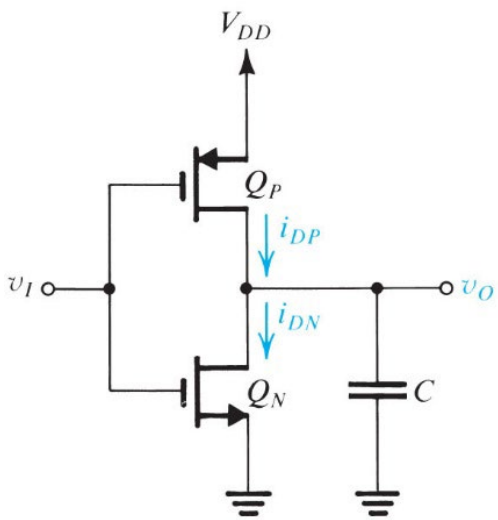


*This is one of the main advantages of CMOS digital logic*

# 17.3.1 **Static Power**

- Be careful though … what if we are NOT specifying that $v_I$ is either $V_{DD}$ or 0V
- Example
  $v_I$ is not changing, but is $V_{DD}/2$ (assumed matched transistors and $\lambda = 0\ V^{-1}$)
- Then we know but transistors are in saturation and

$$i_{Dn} = i_{Dp} = \frac{k}{2}\left(\frac{V_{DD}}{2} - V_t\right)^2$$

*and*

$$P_{static}\left(v_i = \frac{V_{DD}}{2}\right) = V_{DD}\frac{k}{2}\left(\frac{V_{DD}}{2} - V_t\right)^2$$

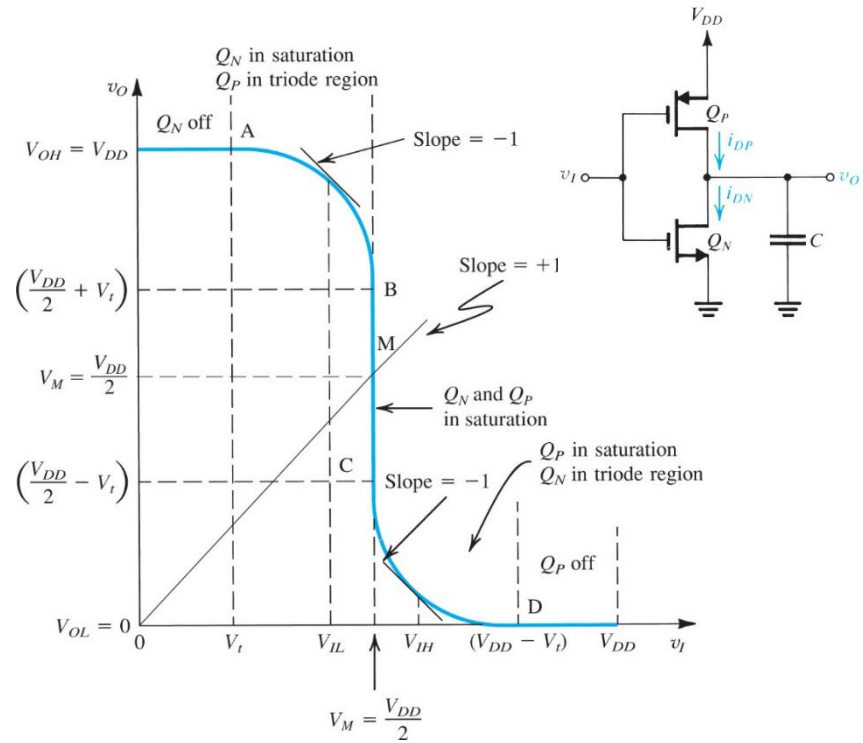


*Since in this static condition (i.e., $v_I = V_{DD}/2$) the current is at its peak, this would actually be the maximum static power dissipated along the VTC*

# 17.3.1 **Dynamic Power**

- Now consider what happens when the input is switching

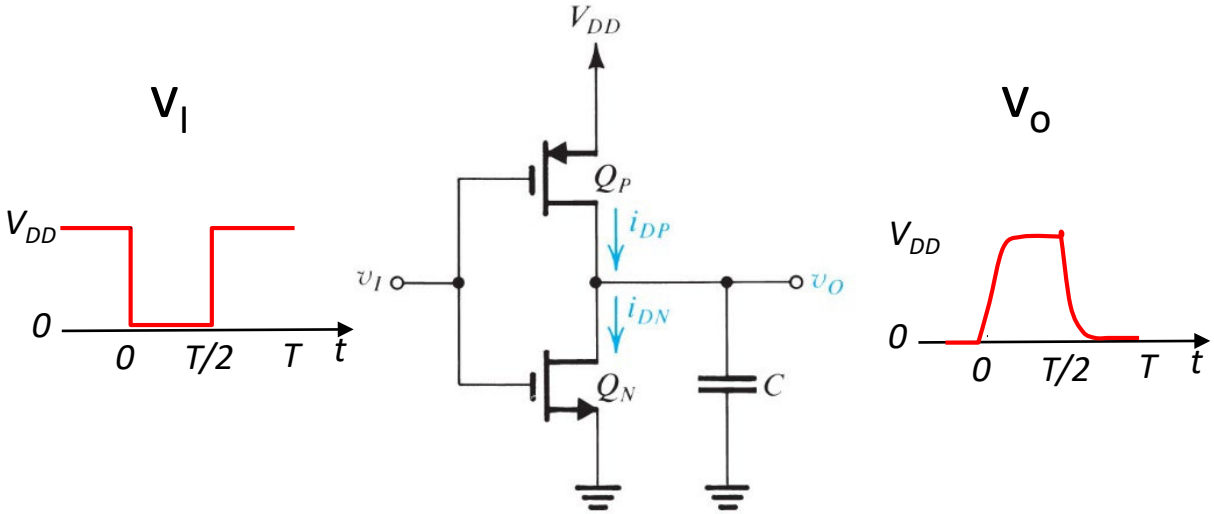


*T is the period*

*and*

*f = 1/T is the switching frequency*

# 17.3.1 **Dynamic Power**

- When $v_I$ switches from high to low the gate looks like an RC circuit

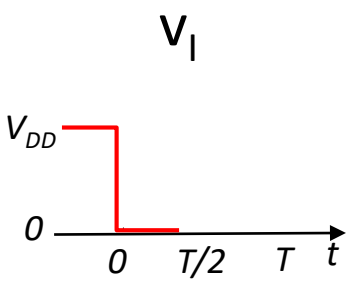


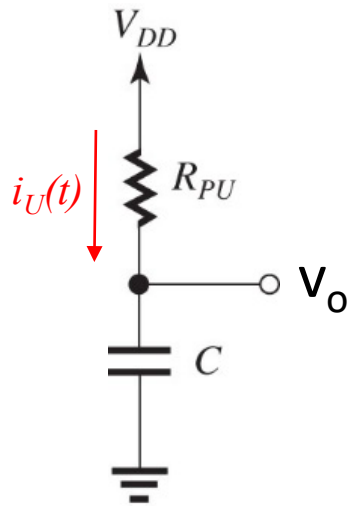


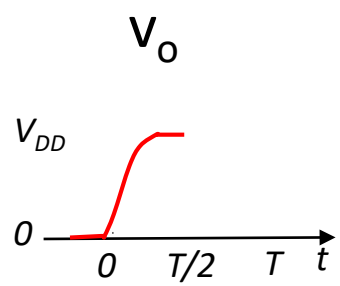


$$v_O(t) = V_{DD}\left(1 - \exp\left(\frac{-t}{R_{PU}C}\right)\right)$$

$$0 < t < \frac{T}{2}$$

*Current will flow from supply, $V_{DD}$, through the resistor and charge up the capacitor*

# 17.3.1 **Dynamic Power**

- When $v_I$ switches from low to high the gate looks like an RC circuit

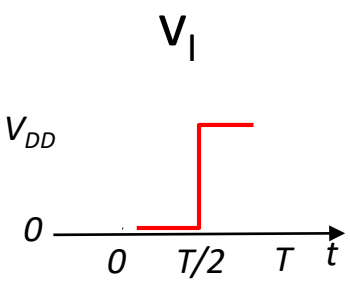


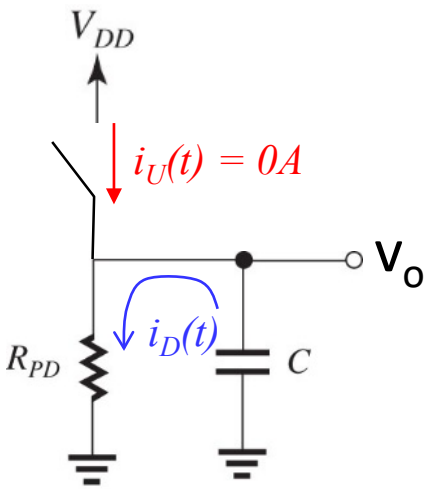


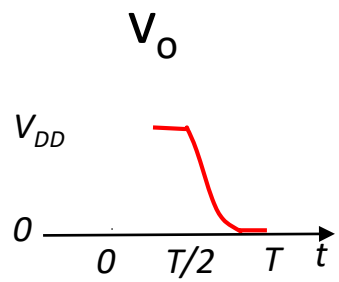


$$v_O(t) = V_{DD} \exp\left(\frac{-t}{R_{PD}C}\right)$$

$$\frac{T}{2} < t < T$$

*NO current will flow from supply …*
*but the capacitor will discharge to ground*

# 17.3.1 **Instantaneous Power from Supply**

- For $0 < t < T/2$ the instantaneous power from supply is

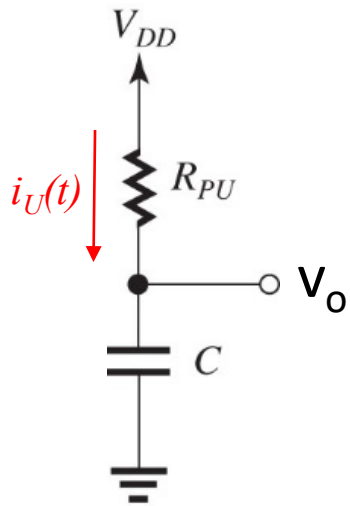


$$p(t) = V_{DD} \bullet i_U(t)$$
$$= V_{DD} \bullet C \frac{dv_O}{dt}$$
$$= \frac{V_{DD}^{\ 2}}{R_{PU}} \exp\left(\frac{-t}{R_{PU}C}\right)$$

- For $T/2 < t < T$ the instantaneous power from supply is

$$p(t) = 0W \qquad \text{since } i_U(t) = 0A$$

*$V_{DD}$ supply sources power only in ½ cycle*

# 17.3.1 **Average Power per Cycle**

- The average power per cycle *IS* the dynamic power

$$P_{dyn} = \frac{1}{T}\int_0^{\frac{T}{2}} p(t)dt$$

$$= \frac{V_{DD}^{\ 2}}{TR_{PU}}\int_0^{\frac{T}{2}} \exp\left(\frac{-t}{R_{PU}C}\right)dt$$

$$= \frac{V_{DD}^{\ 2}}{TR_{PU}}\left(-R_{PU}C\right)\exp\left(\frac{-t}{R_{PU}C}\right)\Bigg|_0^{\frac{T}{2}}$$

$$= -\frac{CV_{DD}^{\ 2}}{T}\left(\exp\left(\frac{-T}{2R_{PU}C}\right)-1\right) \approx \frac{CV_{DD}^{\ 2}}{T}$$

$$\boxed{\approx fCV_{DD}^{\ 2}}$$

*If $T >> 2R_{PU}C$ … which is generally a good assumption .. why??*

*Dynamic power goes up with increase frequency load capacitance and supply voltage …*

# 17.3.1Saturation current during switching

- Recalling from the VTC, during each switching event the transistors both enter saturation during the transition from one logic state to the other

- For a matched CMOS inverter, the peak current occurs at the midpoint $V_{DD}/2$, and this gives rise to an additional power dissipation

- This component of power dissipation associated with switching is usually less than the dynamic power, $P_{dyn} = fCV_{DD}{}^2$ (we typically assume this)

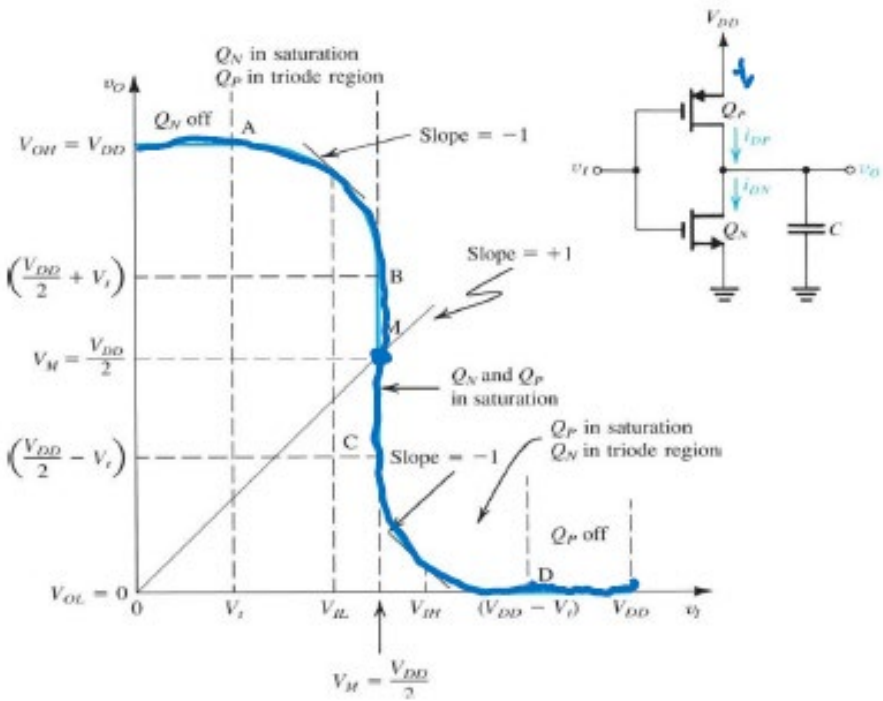


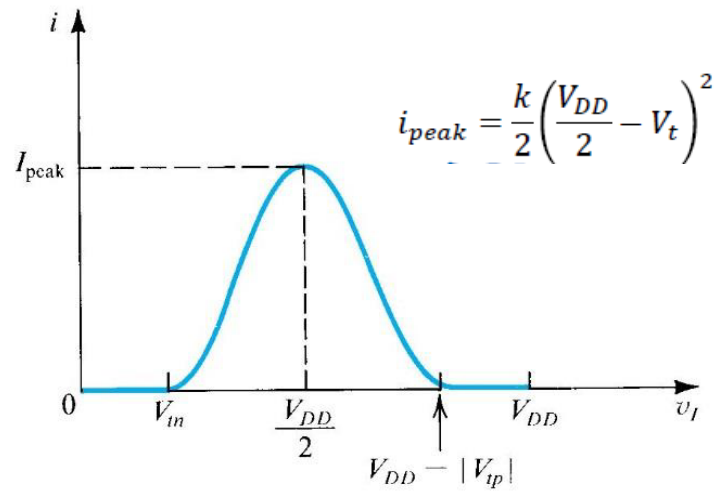




Oxford University Publishing
Microelectronic Circuits by Adel S. Sedra and Kenneth C. Smith (0195323033)

# 17.3.2 **Power and Energy Delay Products**

- There is an inherent tradeoff between delay (maximum frequency) and the dynamic power

$$f_{\max} = \frac{1}{2t_p}$$

↑ *Faster* ↓ *Slower*

$$P_{dyn,\max} \approx f_{\max} C V_{DD}^{\ 2}$$

↑ *More power* ↓ *Less power*

- The Power Delay Product (PDP) and Energy Delay Product (EDP) are technology figures of merit

$$PDP = P_{dyn,\max} t_p = \frac{1}{2} C V_{DD}^{\ 2}$$

$$EDP = PDP \bullet tp = \frac{1}{2} C V_{DD}^{\ 2} t_p$$

*Generally want to have these small so want to reduce C and VDD … that's why we scale!*