Unit #3
Chapter #18
Memory Circuits

from **Microelectronic Circuits** Text
by Sedra and Smith
Oxford Publishing

Introduction

- **IN THIS UNIT YOU WILL LEARN ABOUT**
  - How to use transistors as switches
  - The basic memory element: the latch
  - The design and operation of SR and D Flip-Flops
  - Organization of memory chips
  - The operation of static memory (SRAM) cells

Unit #3
Chapter #18.: NMOS Transistors as Switches
Lecture 12

from **Microelectronic Circuits** Text
by Sedra and Smith
Oxford Publishing

18.1 **Use of Switches in Pass Transistor Logic**

- Some design methodologies use switches to perform logic operations

- Examples

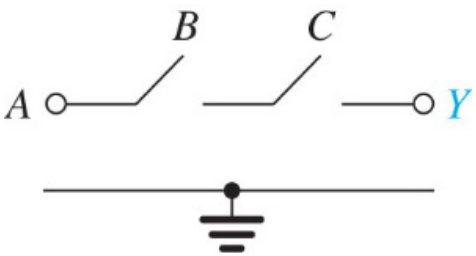

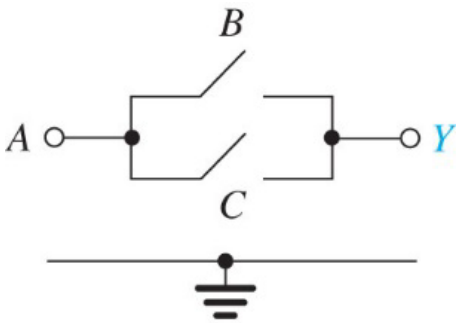

$$Y = ABC$$

$$Y = A(B + C)$$

The switches in these circuits are made using pass transistors and the logic is called pass-transistor logic (PTL)

18.1.1 **NMOS Transistors as Switches**

- Switches can be designed with NMOS or PMOS transistors, but we will only consider NMOS switches

- Just like CMOS logic, we will control switches with two logic levels, v_C, applied to the NMOS gate
  - Logic 0 (0V on the gate) means the switch is open
  - Logic 1 (V_{DD} on the gate) means the switch is closed

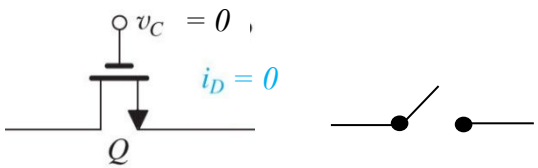

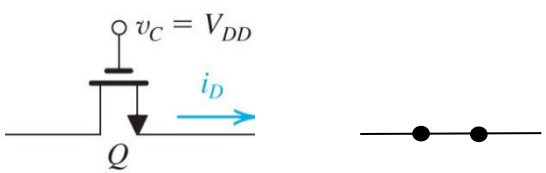

18.1.1 **Dynamic Operation**

- Since no current passes through the switch when it is open, we only need to analyze its operation when it is closed

- We will consider how the output, v_O, of a closed switch responds to an instantaneous change in the input, v_I

- Two cases
  - v_I switches from 0 to V_{DD}
  - v_I switches from V_{DD} to 0

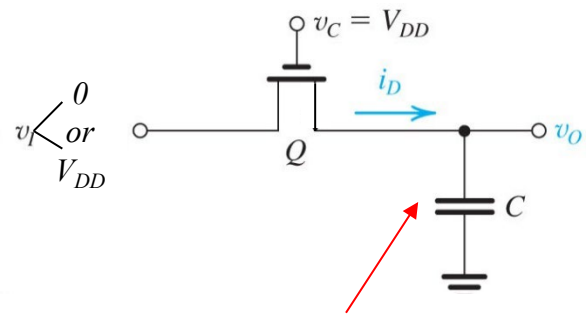

Note: just like the dynamic operation of CMOS gates, we must consider impact of capacitive loading at output

<u>VERY IMPORTANT</u> Which terminal is the drain and which is the source?

Answer: The terminal that has the higher (lower) voltage acts at the drain (source)

18.1.1 **Low to High Input/Ouput Switching**

- Prior to t = 0, the switch is closed so $v_I = v_O = 0V$, but since v_C (the gate voltage) is V_{DD}, the transistor is on and in triode

- At $t = 0^+$, $v_I = V_{DD}$ but because we cannot instantaneously change the voltage across the capacitor, $v_O = 0V$

- The transistor is now operating in saturation, with the input acting as the drain and output as the source

- The drain current at $t = 0^+$ is now

$$i_D = \frac{1}{2} k_n' \frac{W}{L} \left(V_{DD} - V_t\right)^2$$

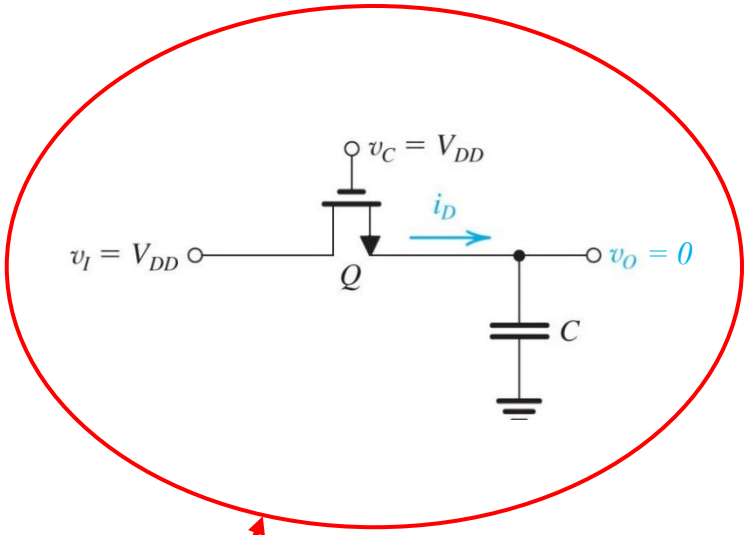

Circuit at $t = 0^+$

18.1.1 **Low to High Input Switching**

- For t > 0, the load capacitor charges up, raising the output voltage
- The input (drain) is equal to V_{DD} and the gate, v_C, is V_{DD}, so even though the output (source) is increasing, the transistor remains in saturation
- The drain current for t > 0 is

$$i_D = \frac{1}{2} k_n' \frac{W}{L} \left(V_{DD} - v_O - V_t\right)^2$$

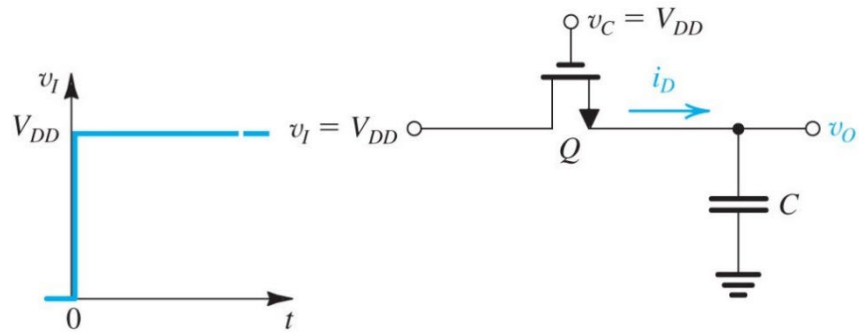

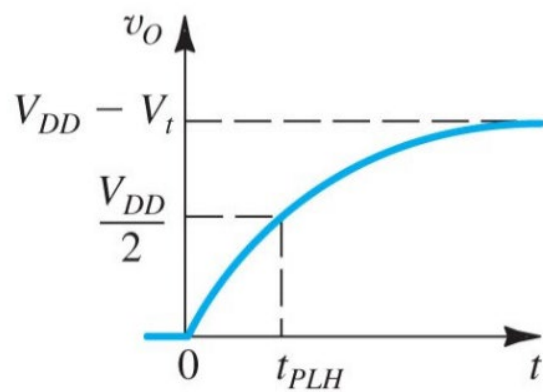

18.1.1 **Key Features of v_O vs. time**

1. The maximum v_O is $V_{DD} - V_t$ … WHY?

   … because when the $v_O = V_{DD} - V_t$ the current $i_D = 0A$ ($v_{GS} = V_t$) and the capacitor stops charging

2. Body effect is now in play!

   - Since typically the body on the NMOS is grounded (0V), the source (output) to body voltage is > 0V, which changes the threshold voltage

$$V_t = V_{t0} + \gamma\left(\sqrt{V_{SB} + 2\phi_f} - \sqrt{2\phi_f}\right)$$
$$= V_{t0} + \gamma\left(\sqrt{v_O + 2\phi_f} - \sqrt{2\phi_f}\right)$$

Note: you have to take the change in V_t into account during the <u>low to high</u> switch

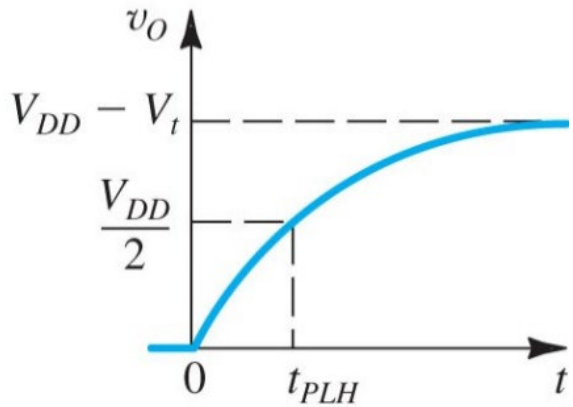

Called a "poor 1"

18.1.1 **High to Low Input/Ouput Switching**

- Prior to t = 0, the switch is closed so $v_I = v_O = V_{DD}$ (or $V_{DD} - V_t$)
- At $t = 0^+$, $v_I = 0V$ but $v_O = V_{DD}$
- The transistor is now operating in saturation, with the input acting as the source and output as the drain
- The drain current at $t = 0^+$ is now

$$i_D = \frac{1}{2} k_n' \frac{W}{L} (V_{DD} - V_t)^2$$

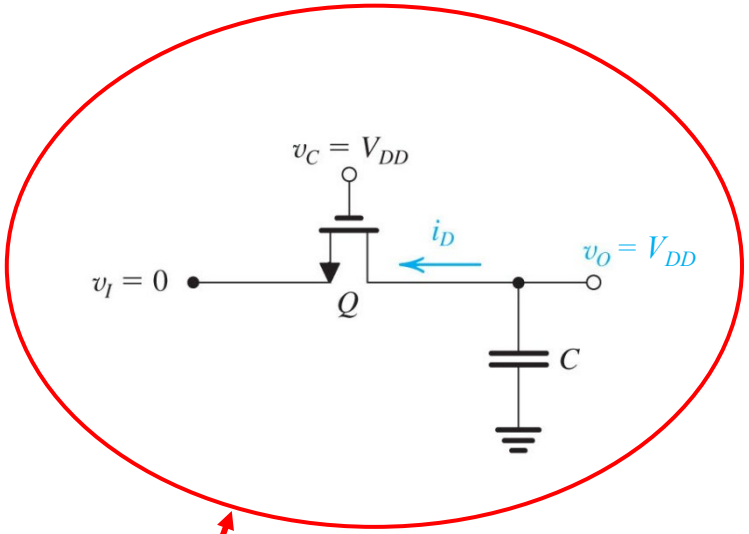

Circuit at $t = 0^+$

18.1.1 **Low to High Input Switching**

- For t > 0, the output voltage across the capacitor drops

- What is the state of the transistor? BE CAREFUL!

- Since the output voltage is the drain, and it is changing, the device can change modes from saturation to triode

$$v_O = v_{DS} \geq V_{OV} = V_{DD} - V_t$$

the transitor is in saturation

$$v_O = v_{DS} \leq V_{OV} = V_{DD} - V_t$$

the transitor is in triode

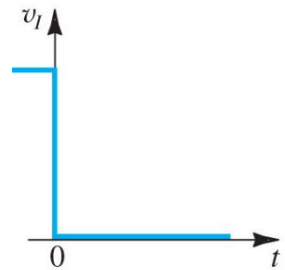

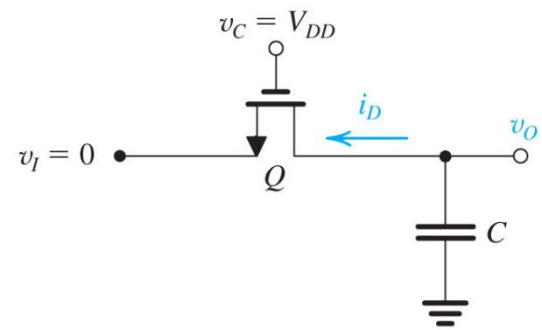

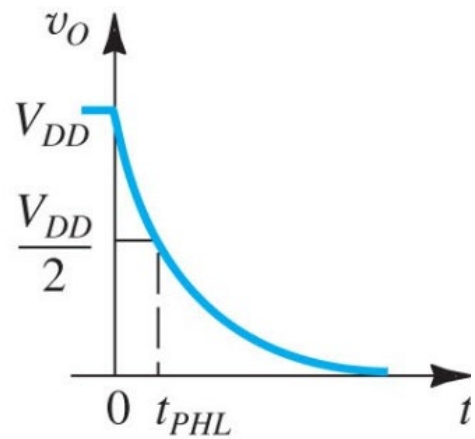

But the good news for high-low switching is there is NO BODY EFFECT to worry about!

18.1.1 **Propagation Delays for Switches**

- We define low-to-high propagation delay, t_{PLH}, as the time it takes for the output to rise from 0V to $V_{DD}/2$

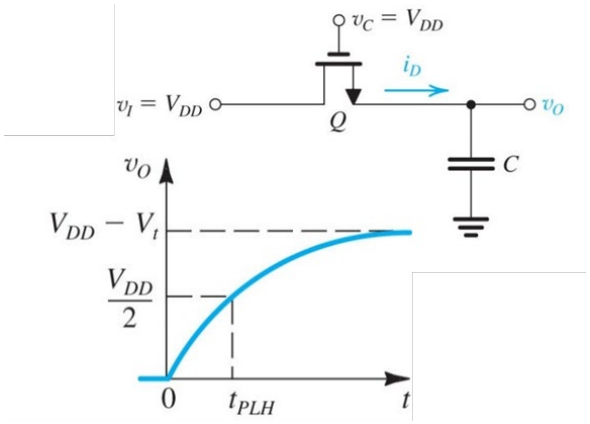

- We define high-to-low propagation delay, t_{PHL}, as the time it takes for the output to drop for V_{DD} to $V_{DD}/2$

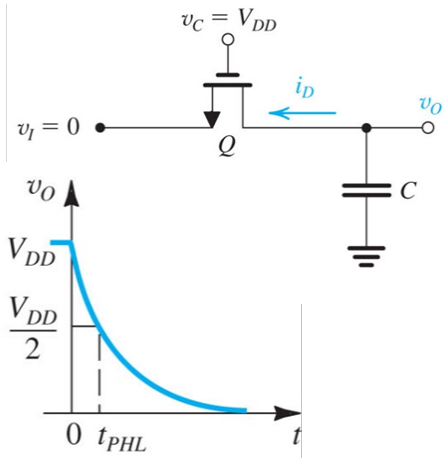

Calculating propagation delay in switches is similar to the method of averages currents (Method 1) that we showed for the inverters

We will show how this is done in the example problem covered for this lecture

18.1.2 **DC Restorer (Keeper) Circuit**

- The "poor 1" output the results from low to high switching can be problematic … again WHY?

- Because what would happen if you tied that output to the input of another inverter or gate?

- We can remove this problem by adding DC restorer circuitry to the output node

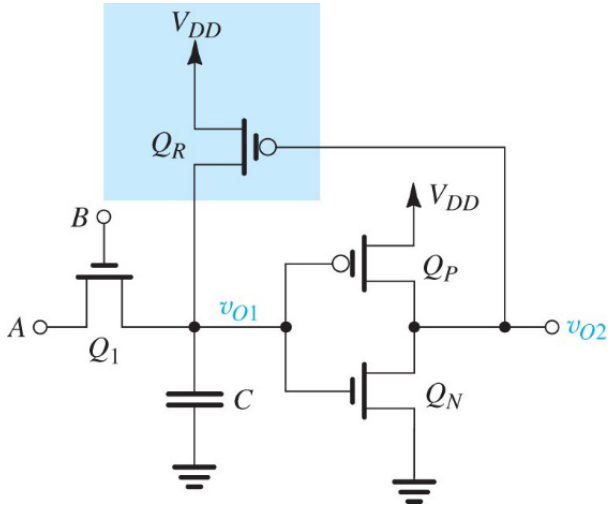

18.1.2 **DC Restorer (Keeper) Circuit**

- How does it work?

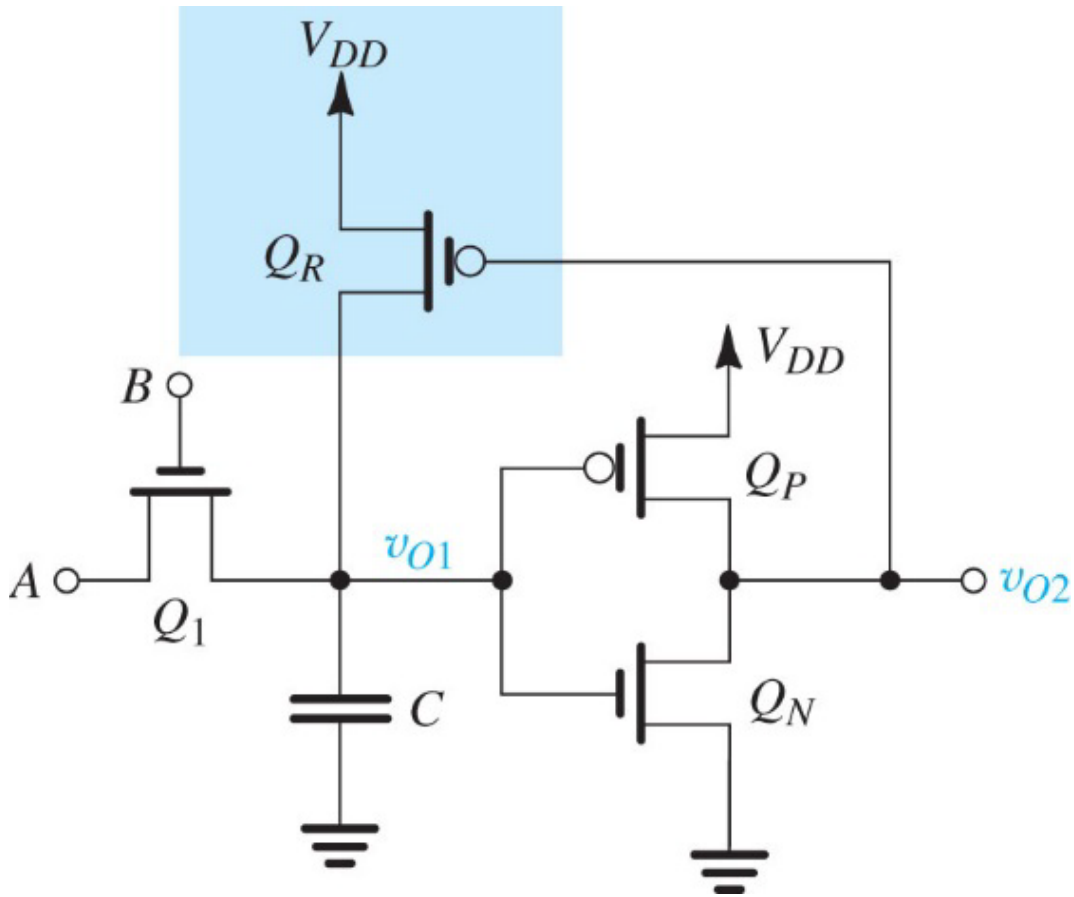

18.1.3 CMOS Transmission Gate
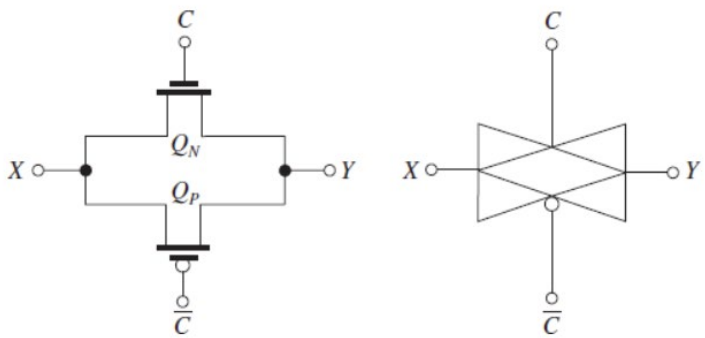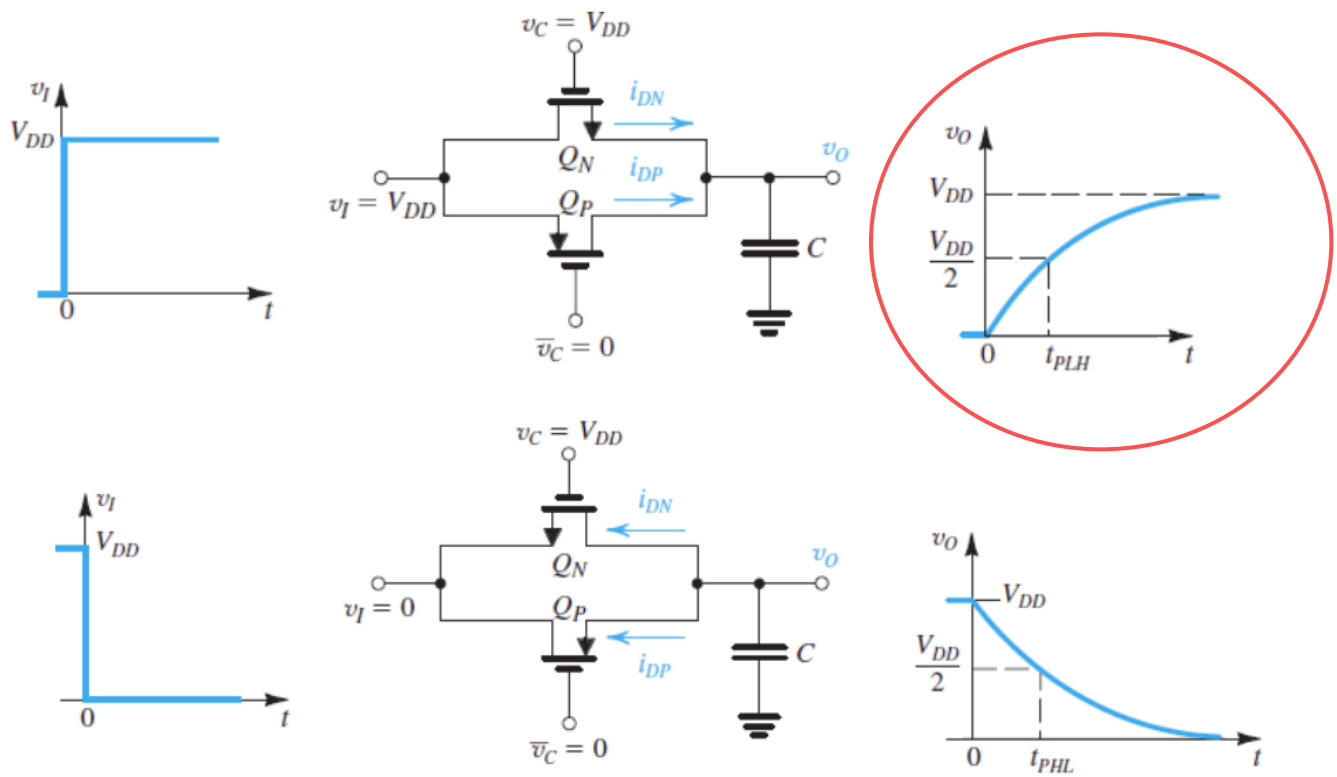
$Y = X$ if $C = 1$