Unit #3
Chapter #18.1: Latches and Flip Flops
Lecture 13

from **Microelectronic Circuits** Text
by Sedra and Smith
Oxford Publishing

18.1.1 **The Latch**

- Latches, unlike logic, are memory circuits so they store information
- Two cross-coupled inverters form the basic latch, which means the output of one inverter feeds the input of the other
- Ideally the latch can store (1,0) or (0,1) indefinitely due to positive feedback

Gate-level schematic

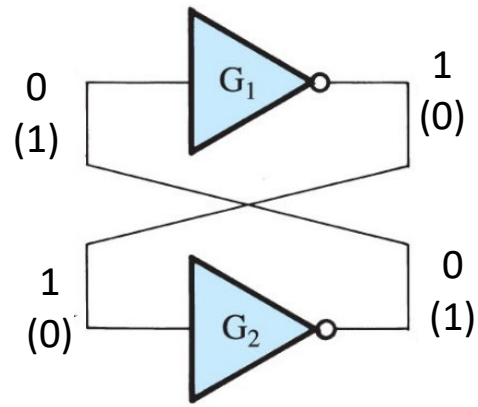

Transistor-level schematic

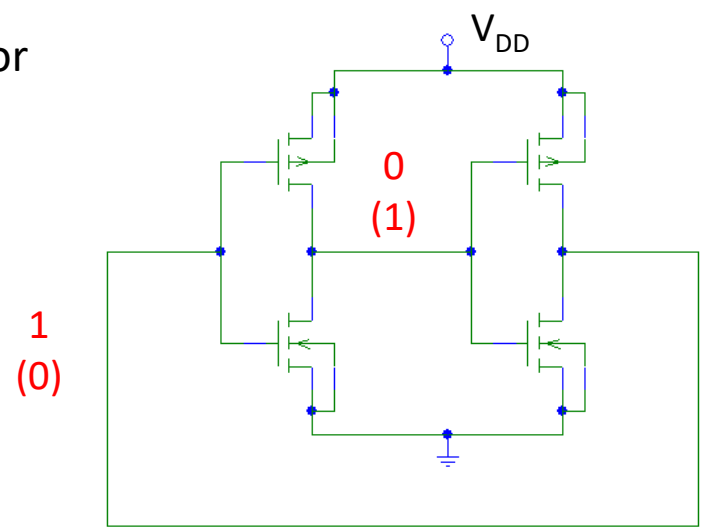

18.1.1 **Bistability**

- The latch circuit has 3 possible states, however only two are stable, i.e., it is bistable
- Consider the operation of two cascaded inverters without the feedback connection (a buffer)

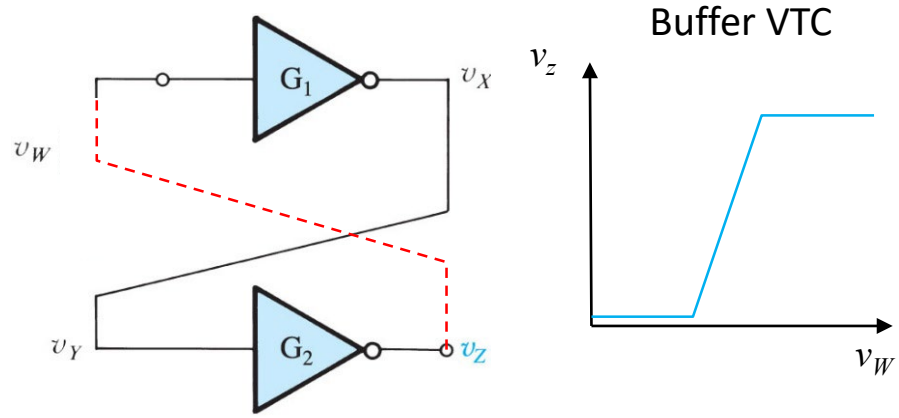

- If output of G_2, v_Z, is tied to input of G_1, v_W, then only possible states for latch are those on buffer VTC that intersect the $v_W = v_Z$ line
- These are states A, B, and C, but only A and C are stable

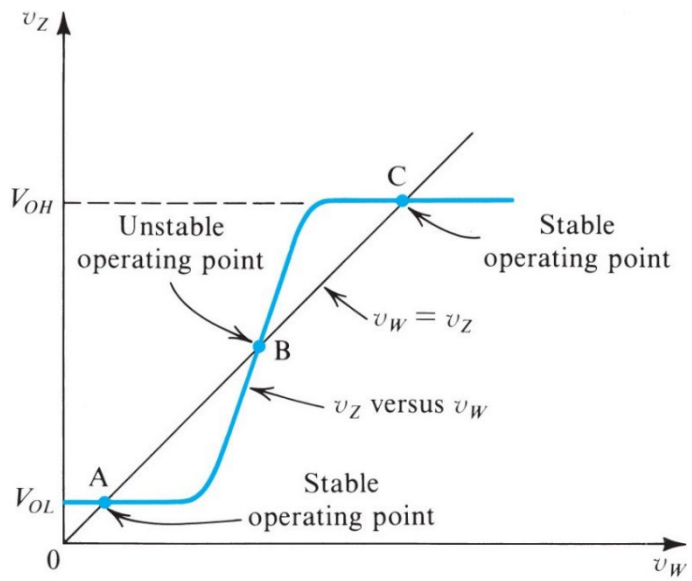

18.1.1 **Bistability**

- Why is point B not a stable state?
- Because of even a slight amount of noise inherent in all circuit wires, the positive feedback forces the signals away from B to either A or C

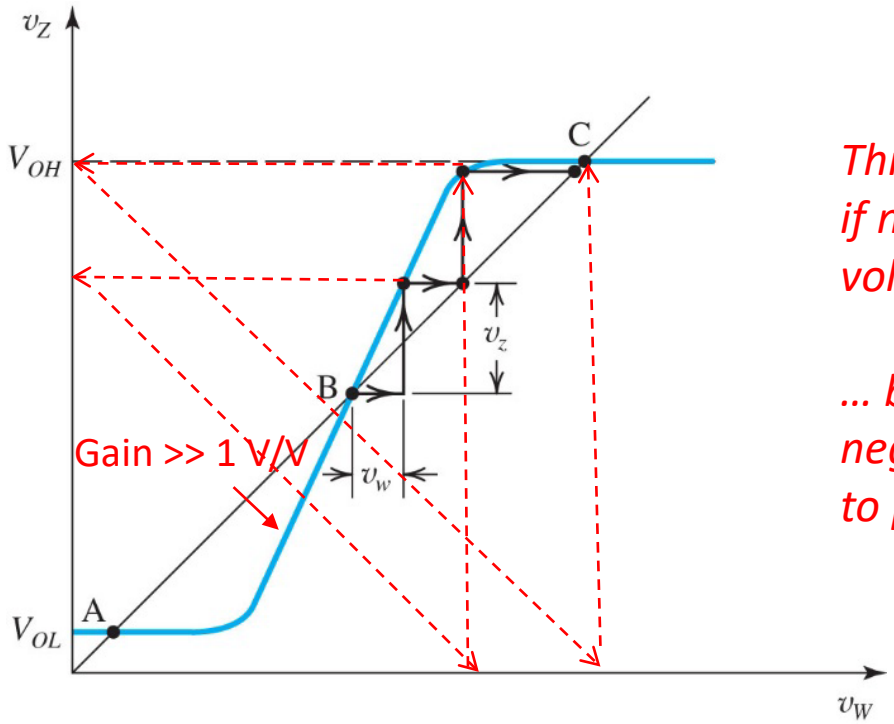

This is what would happen if noise forces v_w to higher voltages …

… but it could also shift negative forcing the output to point A

18.1.2 **The SR Flip Flop**

- The simplest type of flip-flop is the set/reset (SR) flip-flop
- One straight forward implementation uses two cross-coupled NOR gates (G1 and G2)

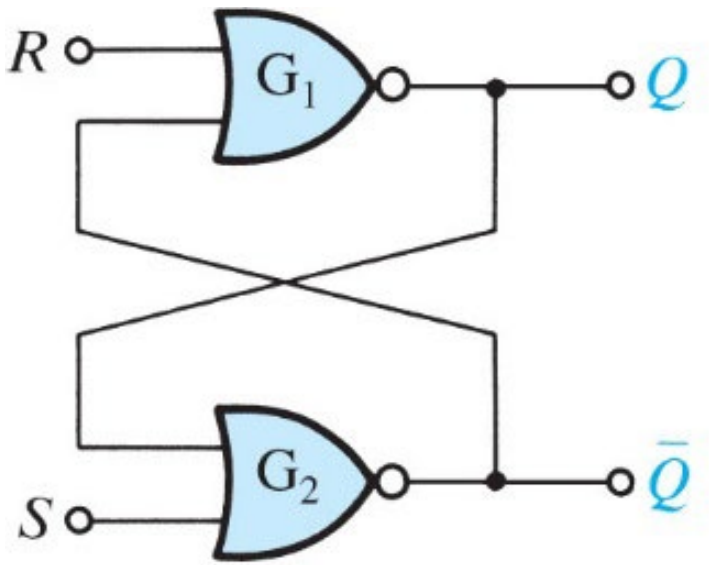

Q and $\overline{Q}$ are opposite, i.e., if Q is logic 1 (0), $\overline{Q}$ is logic 0 (1)

The input signals R and S determine the state of Q

18.1.2 How does the SR Flip Flop Work?

- Consider the NOR truth table

A	B	Y
0	1	0
1	0	0
1	1	0
0	0	1

- Now consider SR FF if S or R are flipped to given state (at n+1)

R	S	Q_{n+1}
0	1	1
1	0	0
0	0	no change
1	1	N/A
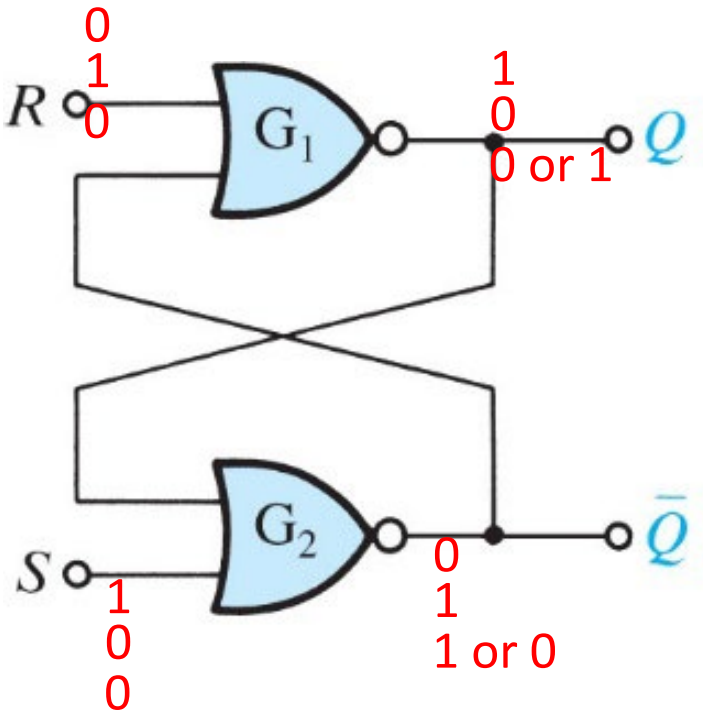
Often case that $R = \overline{S}$