Unit #3
Chapter #18.2: SR and D Flip Flops
Lecture 14

from **Microelectronic Circuits** Text
by Sedra and Smith
Oxford Publishing

18.2.2(3) **The SR Flip Flop**

- We already saw one implementation of the SR FF that uses two cross-coupled NOR gates

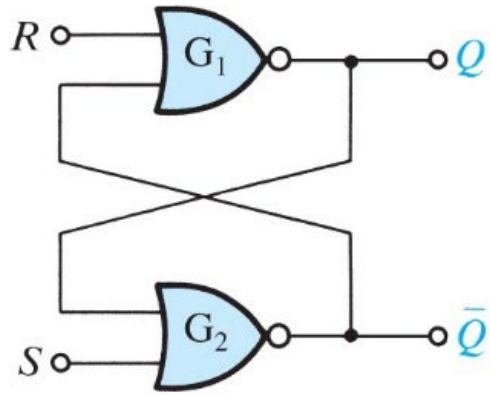

R	S	Q_{n+1}
0	1	1
1	0	0
0	0	no change
1	1	N/A

- Another implementation is the CMOS SR Flip-Flop

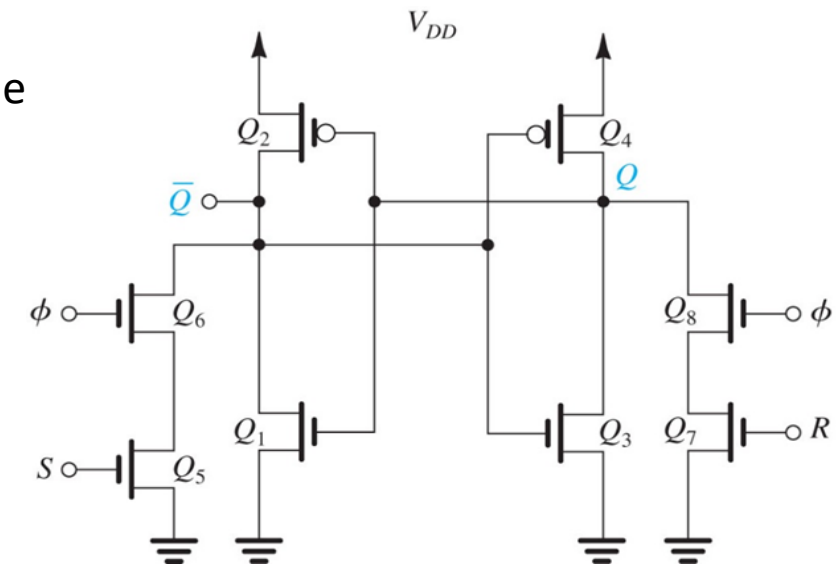

18.2.3 **Clocked CMOS SR Flip-Flop**

- Here's how it works …
- 1st let's assume Q = 0 for $t < t_n$

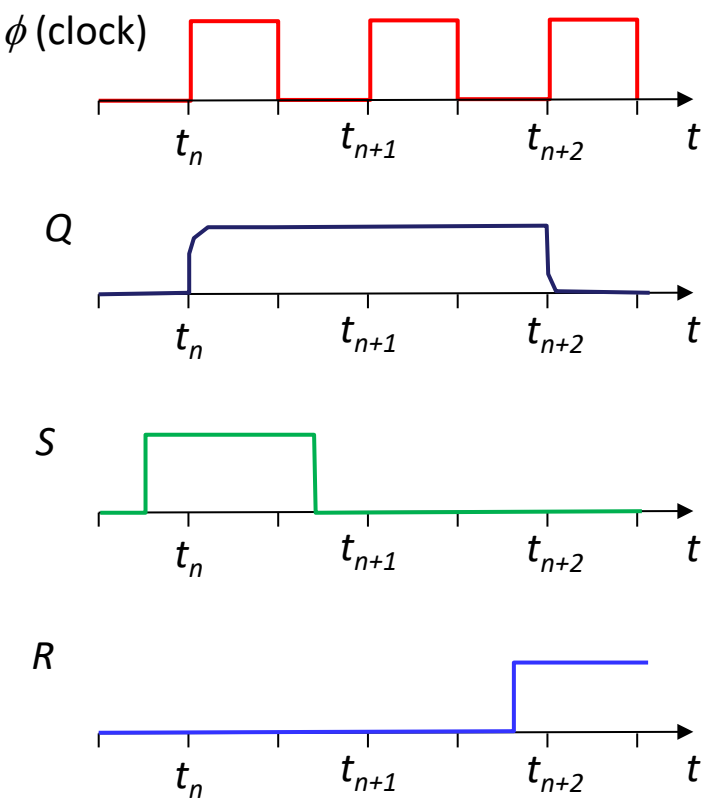

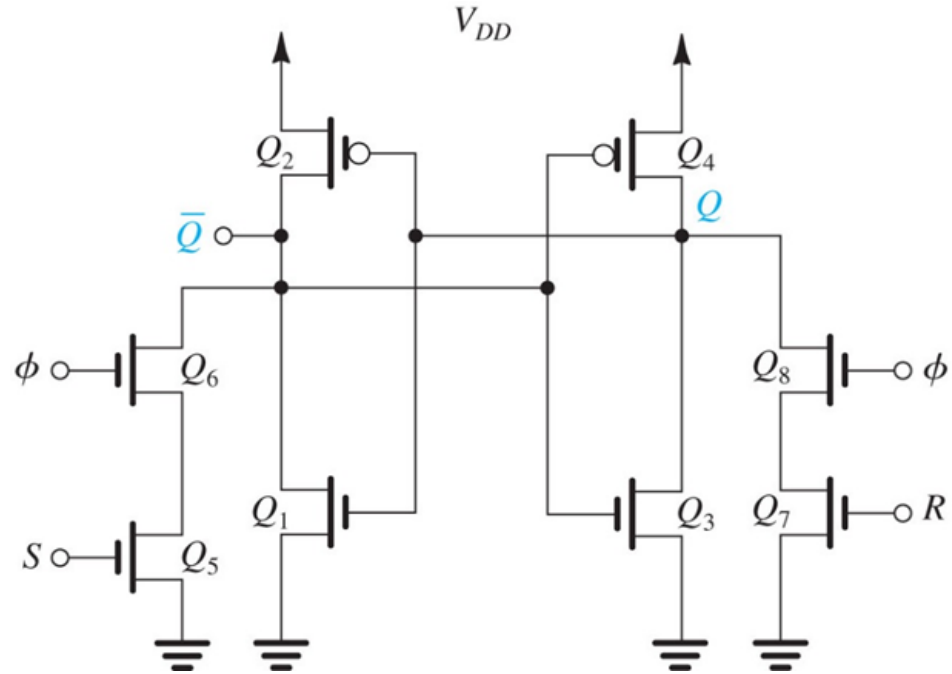

- Q switches to 1 at $t = t_n$ (S = 1, R = 0)
- Q stays 1 at $t = t_{n+1}$ (S = 0, R = 0)
- Q switches to 0 at $t = t_{n+2}$ (S = 0, R = 1)

18.2.3 **Conditions for sizing**

1. In order to set Q to 1 (V_{DD}) from 0 (0 V), Q5 and Q6 must sink enough current to pull $\overline{Q}$ down to a voltage below $V_{DD}/2$ …
   … *this ensures the Q3, Q4 inverter flips*

2. In order to reset Q to 0 (0 V) from 1 (V_{DD}), Q7 and Q8 must sink enough current to pull Q down to a voltage below $V_{DD}/2$ …
   … *this ensures the Q1, Q2 inverter flips*

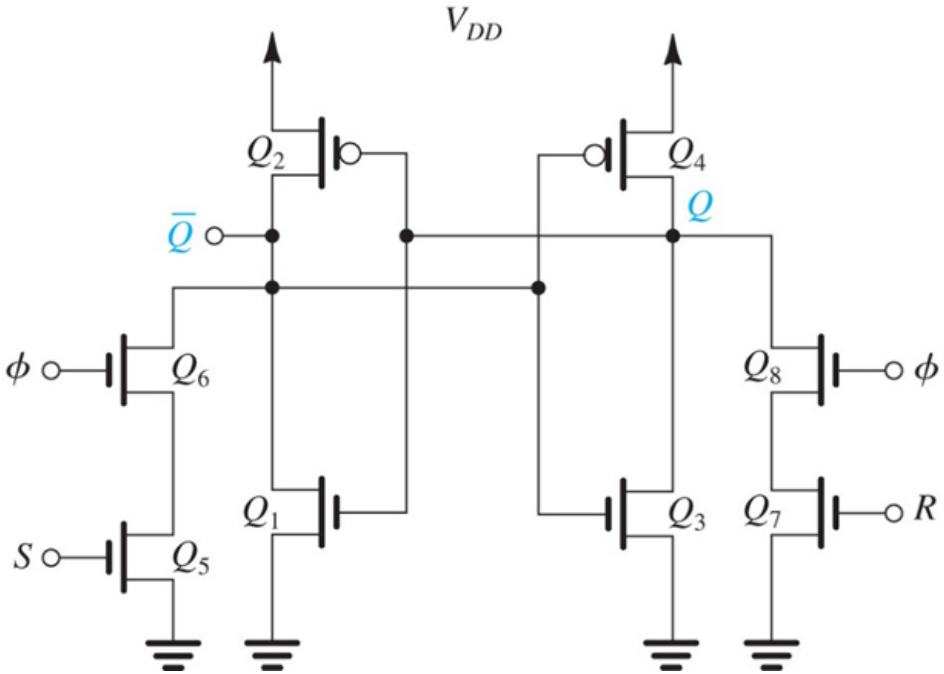

These conditions establish the sizing rules for the transistors in the flip flop

18.2.3 **Conditions for timing**

1. S (R) signals must remain high long enough to ensure positive feedback (regeneration) has time to set (reset) the flip flop

Example of a "hold" error in setting

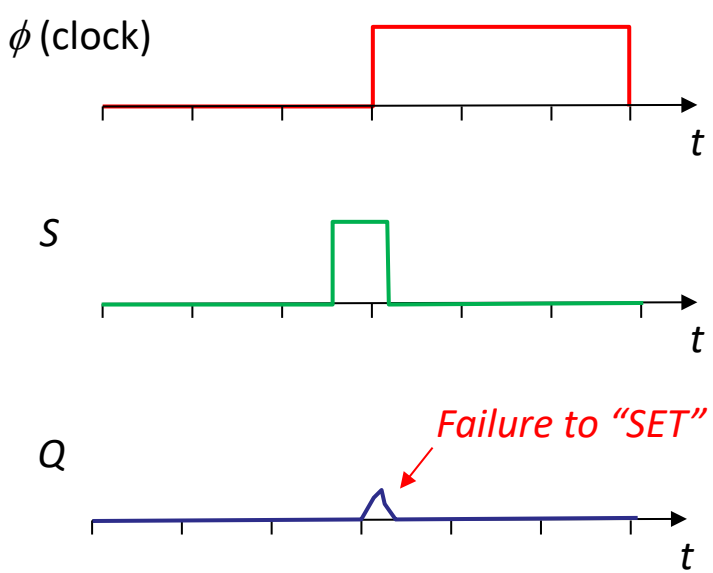

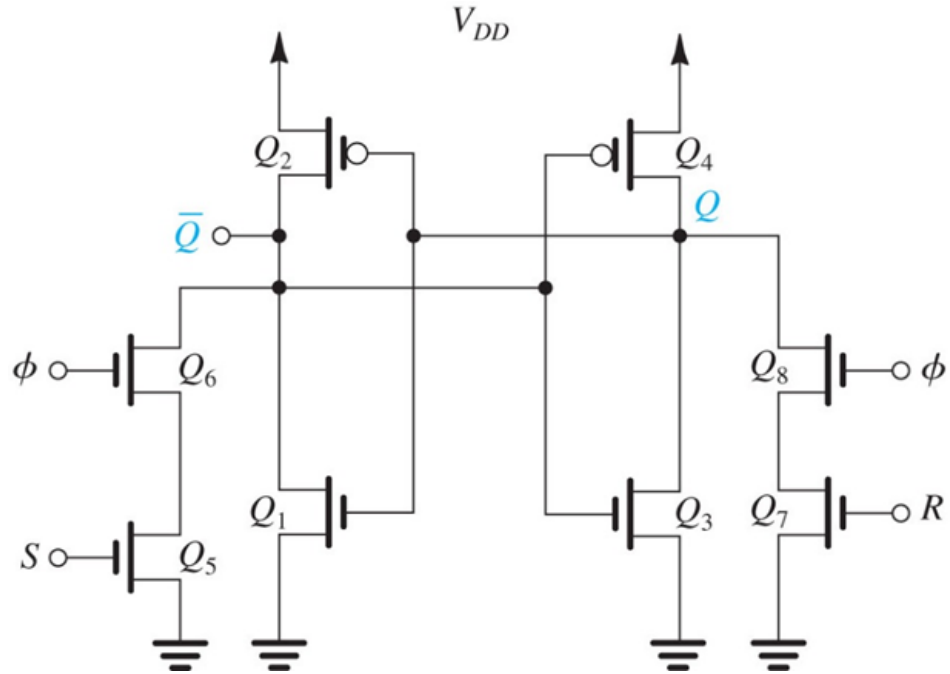

These conditions establish the timing rules for the flip flop

Will be analyzed in next example clip for lecture 14

18.2.5 **D Flip-Flop**

- 2 inputs: the data input (*D*) and the clock input (ϕ)
- When ϕ is low, the FF holds its state
- When ϕ switches high Q = D

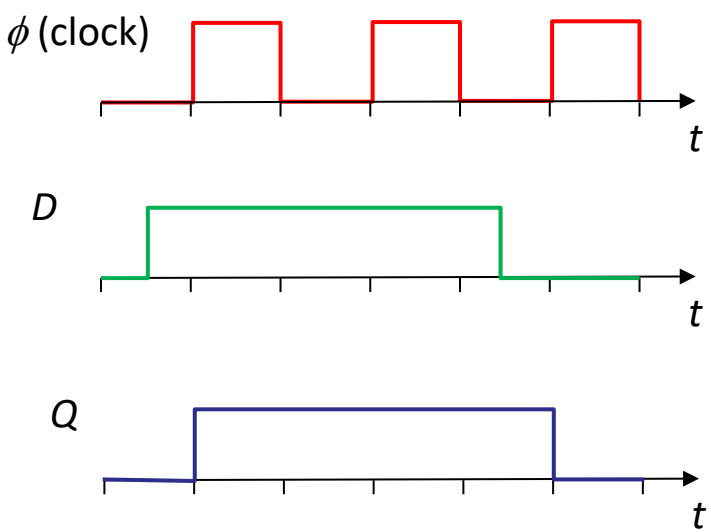

Block Representation

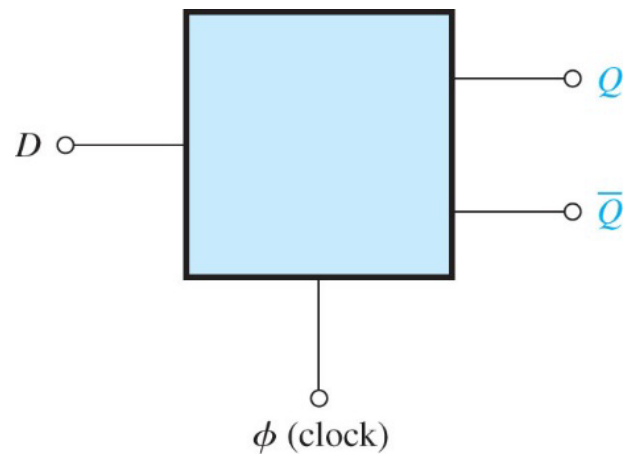

18.2.5 **D Flip-Flop**

- ϕ and $\overline{\phi}$ are non-overlapping clocks .. Ensures not high at same time which can cause upset in data.

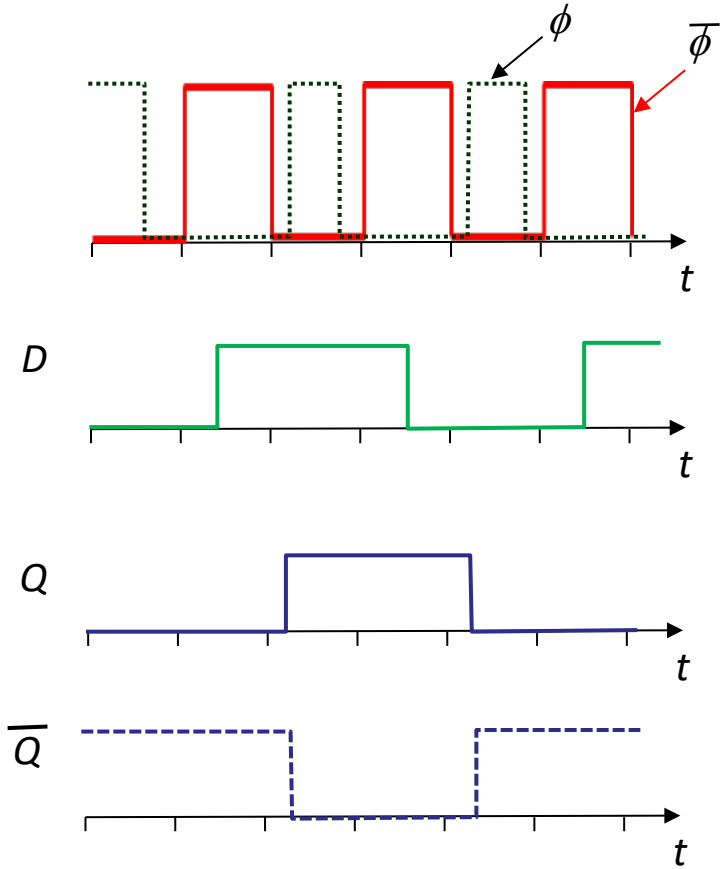

Gate-level Representation

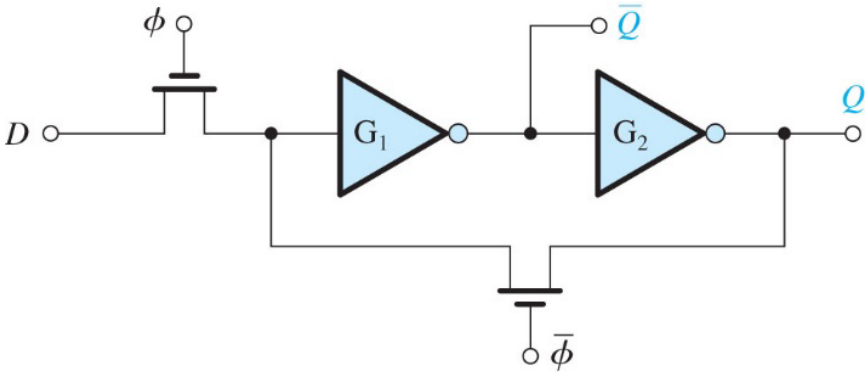

- Note, like the CMOS SR FF, the D FF also is using at latch as the base element.

18.2.5 **D Flip-Flop – Non-Overlapping Clock Generation**

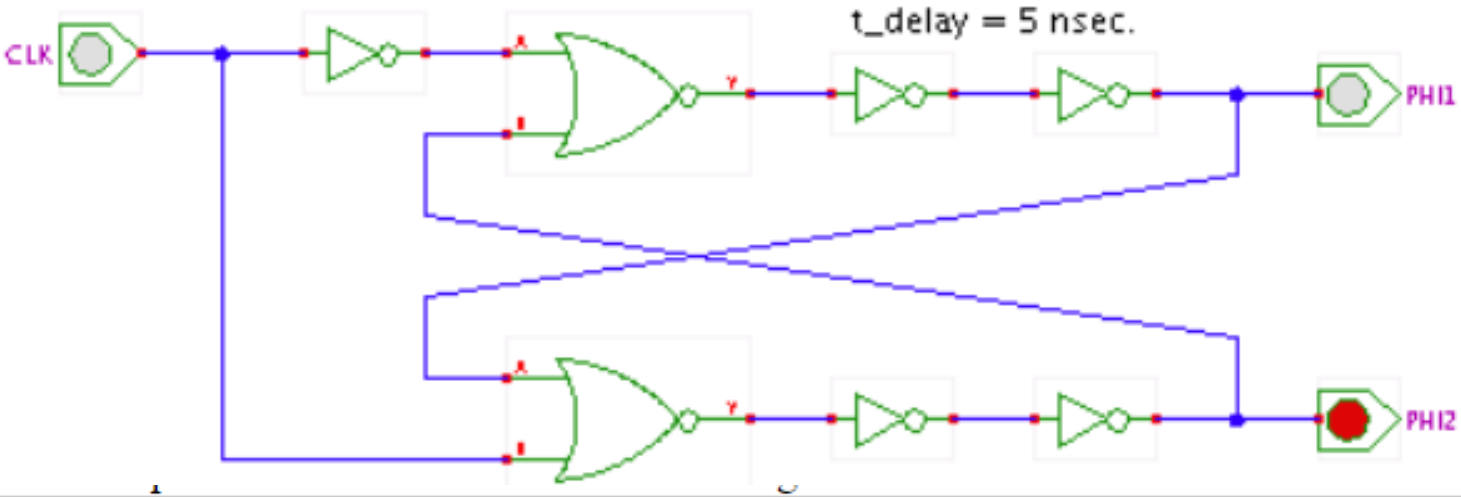

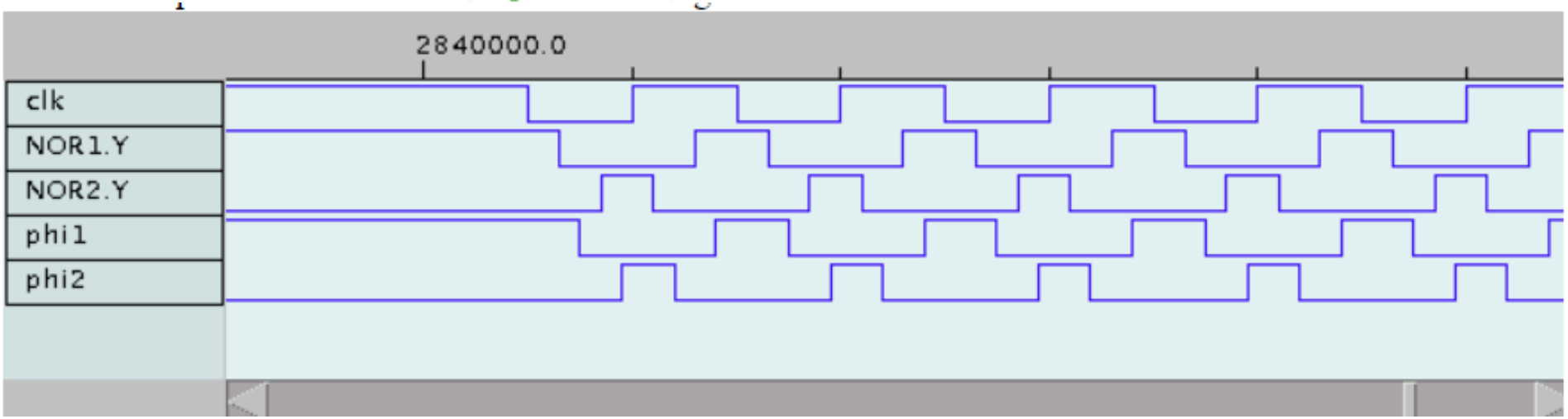

N.H.E.Weste and K.Eshragian, Principles of CMOS design, 1993, section 5.5.10.

18.2.5 **Master-Slave Configuration**

- Even with non-overlapping clocks, data errors can still occur when the Q is following the data input
- In order to provide greater protection for the data, we add an extra "slave" flip flop which simply follows the "master" in subsequent clock cycles

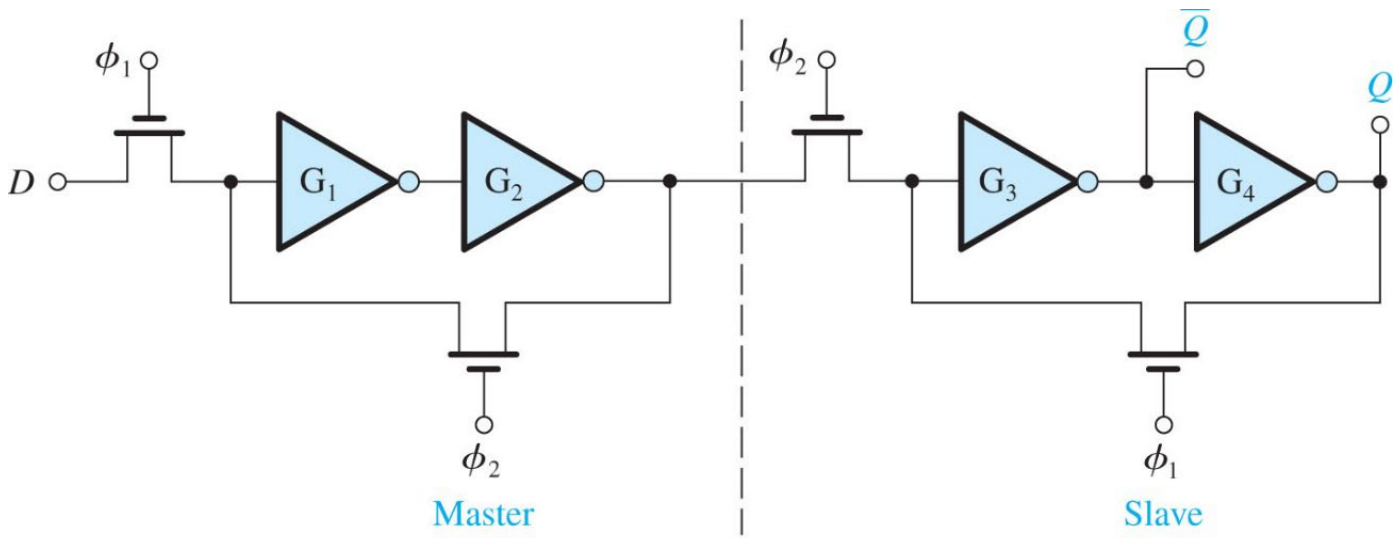

$\phi_2 = \overline{\phi_1}$ (but non-overlapping)

18.2.5 **Master-Slave Configuration**

- Here's how it works
- When $\phi_1 = 0$ and $\phi_2 = 1$, Q = Q_1 and both signals a decoupled from D .. Q_1 is stored and passed to output Q
- When $\phi_1 = 1$ and $\phi_2 = 0$, Q is stored and decoupled from Q_1 … Q_1 is sampling D

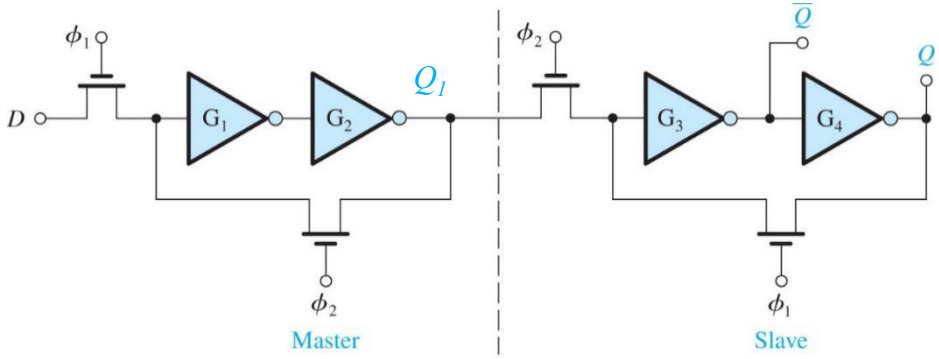

With Master-Slave, there is never any direct path from data input to output, Q

Negative Edge Triggered Master-Slave DFF

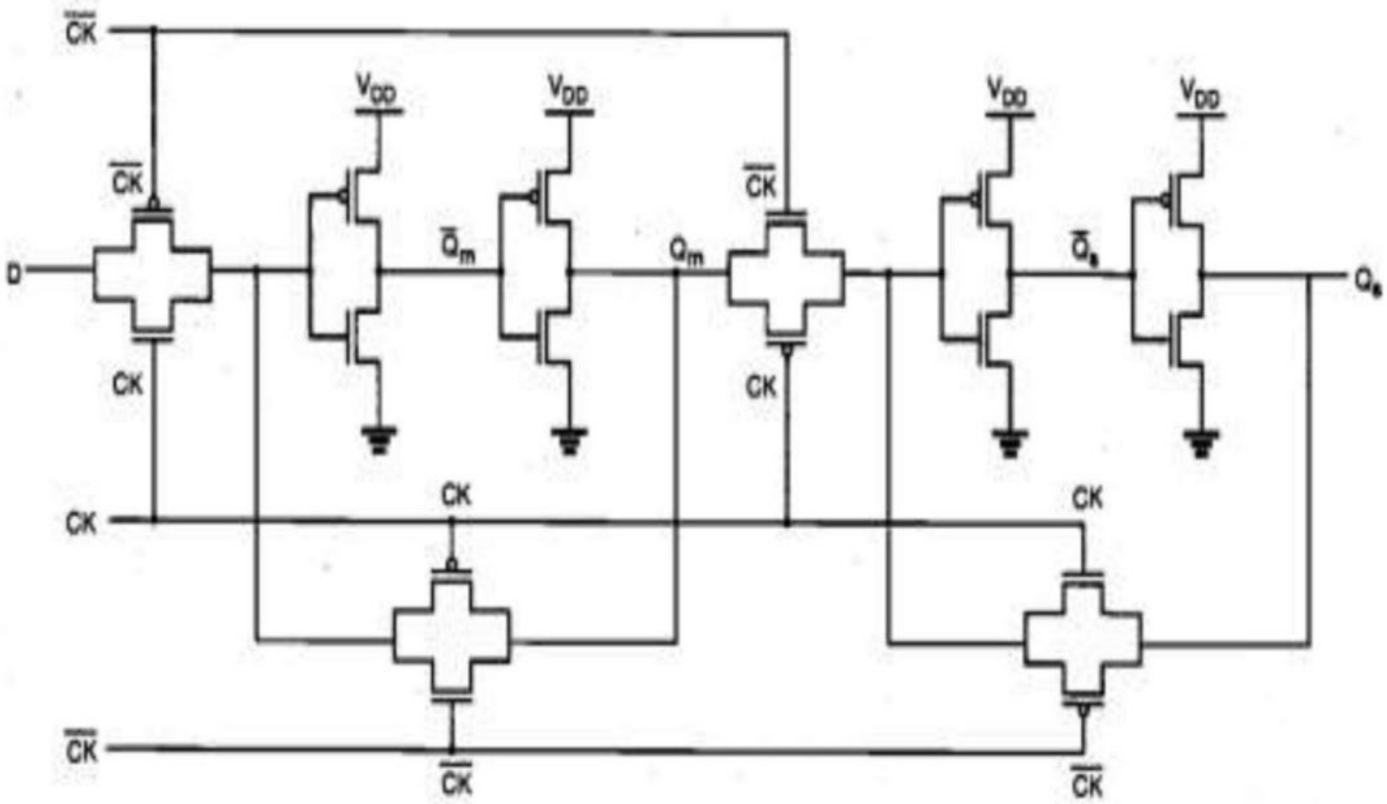

CMOS negative edge-triggered master – slave DFF