Unit #3
Chapter #18.3: Memory Chip Organization
Lecture 15

from **Microelectronic Circuits** Text
by Sedra and Smith
Oxford Publishing

18.3.1 **The Semiconductor Memories**

- Computer memory can be divided into two types
  1. Main Memory
  2. Mass Storage

- Main memory is usually the most rapidly accessible memory and is usually of the random-access type

- Random-access memory (RAM) is one in which the time to store (write) and retrieve (read) is independent of its physical location on the memory matrix …

  … so it takes the same amount of time to write/read to any cell in the matrix

Memory Hierarchy

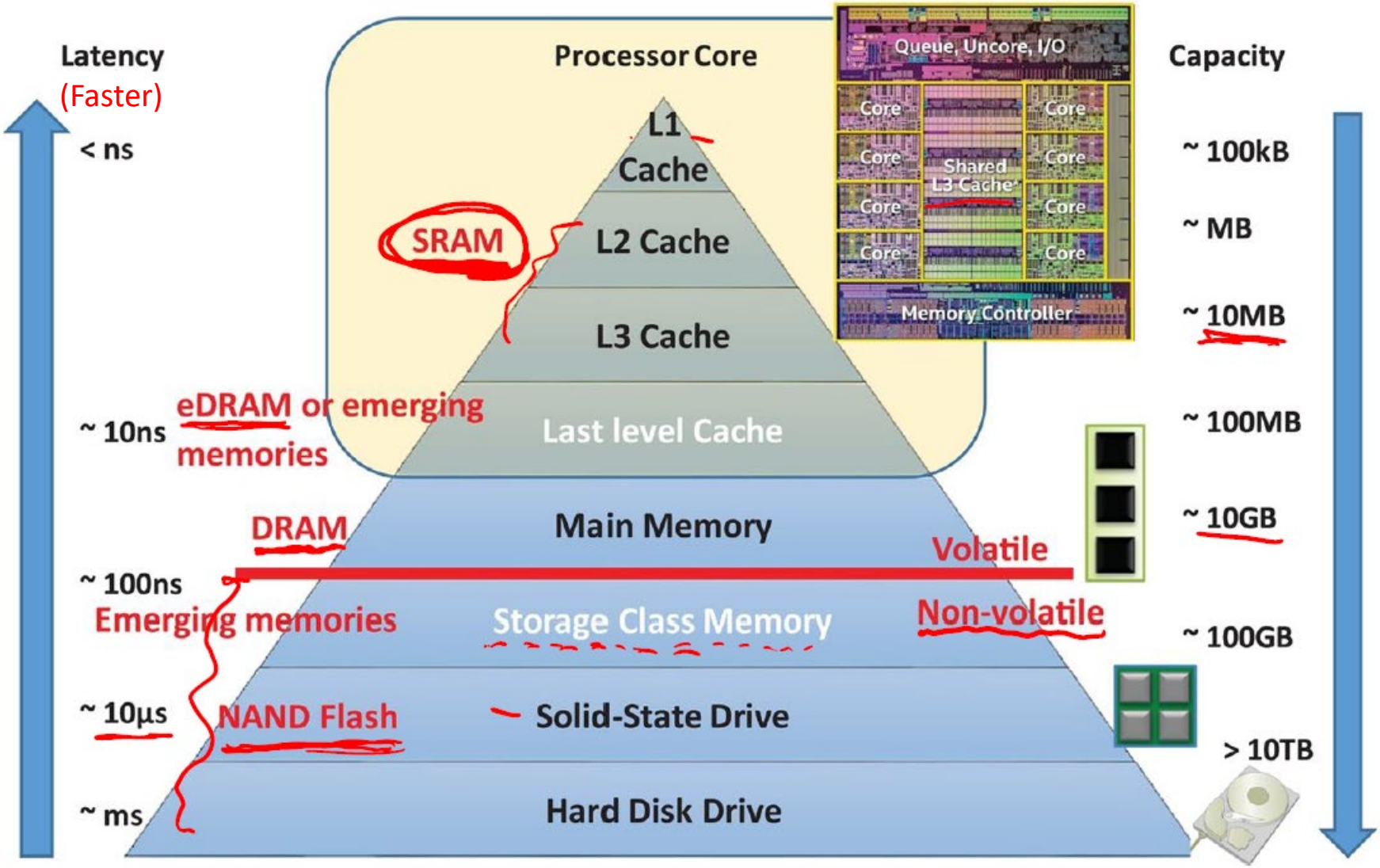

S. Yu, *Semiconductor Memory Devices and Circuits*, CRC Press, 2022.

18.3.1 **RAM Organization**

- The bulk of the RAM consists of cells in which one bit (either 0 or 1) is stored
- The RAM matrix has 2^M rows and 2^N columns so the storage capacity is 2^{M+N} cells
- Each cell is connected to one of the 2^M row (word) lines and one of the 2^N column (bit) lines

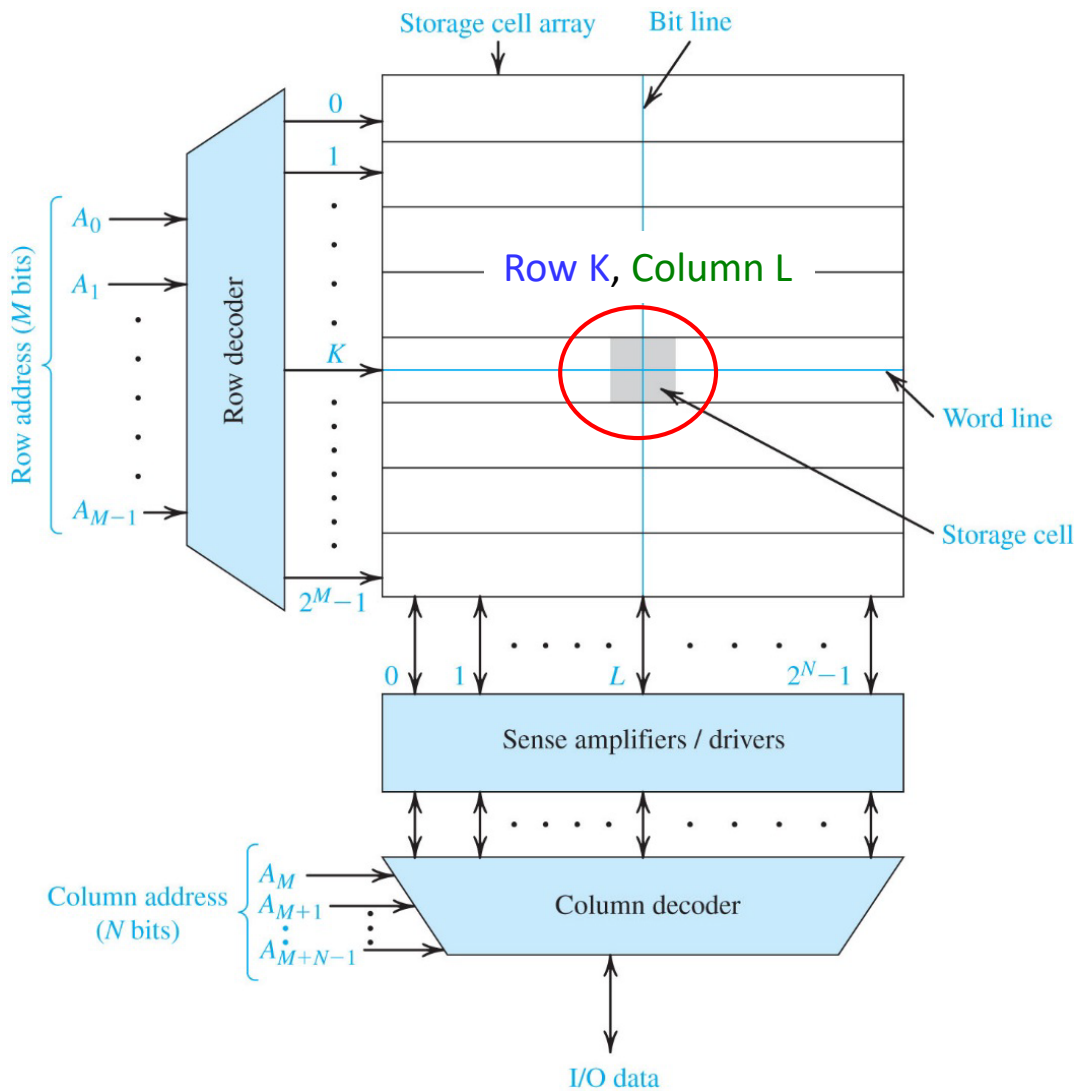

18.3.1 **RAM Organization**

- A row is selected by passing an M bit word (2^M possible values) through a row decoder

  0000 … 1 … 000

K^{th} word line set to 1, the rest are 0

- A column is selected by passing an N bit word (2^N possible values) through a column decoder

  0000 … 1 … 000

L^{th} bit line set to 1, the rest are 0

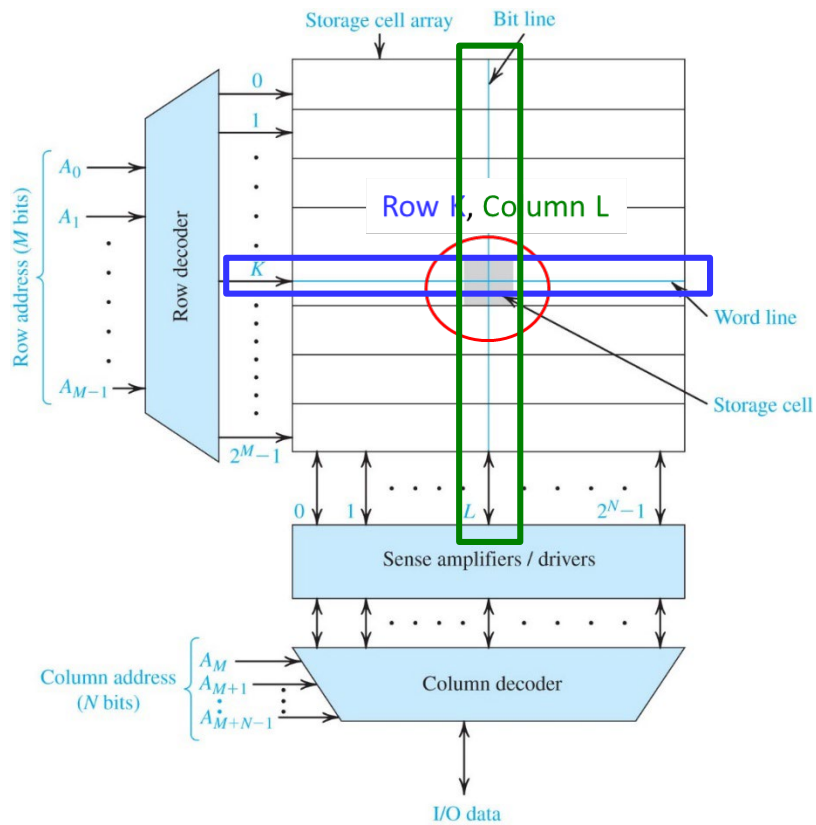

When the Kth row and L^{th} column address is selected the (K,L) cell is ready to be written to or read from

18.3.1 **Read Operation**

- Once the (K,L) cell is selected, information in cell (0 or 1) is passed to sense amplifier

- The sense amplifier quickly determines the bit state (0 or 1) and sends the data out to system

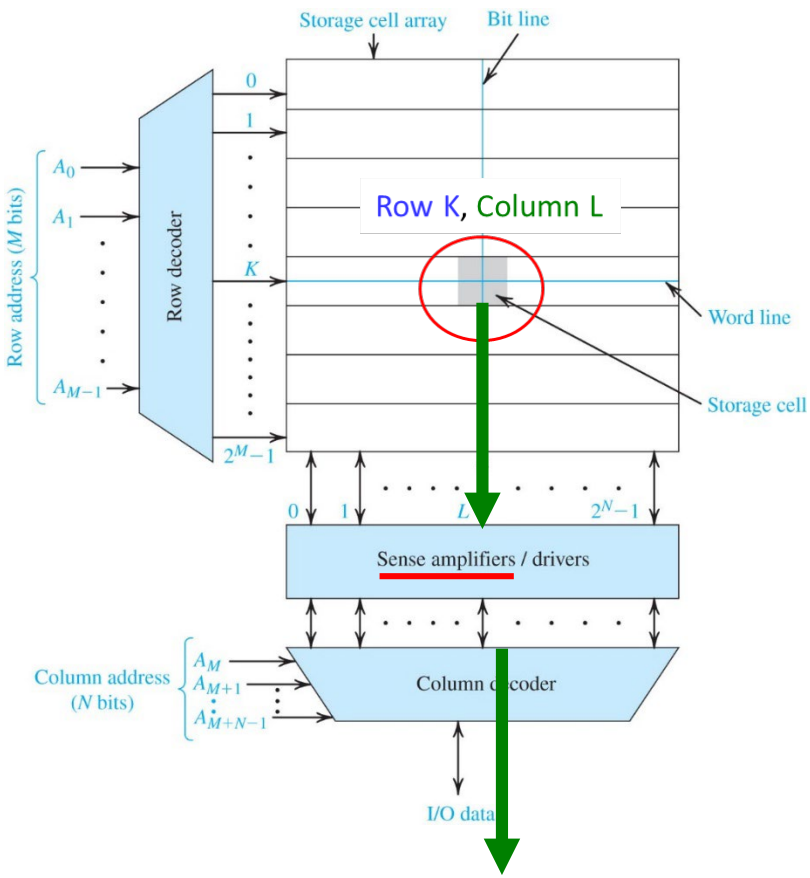

18.3.1 **Write Operation**

- Once the (K,L) cell is selected, information in system data (0 or 1) is passed to a driver circuit

- The driver quickly writes the data to the (K,L) cell in the matrix where it is stored

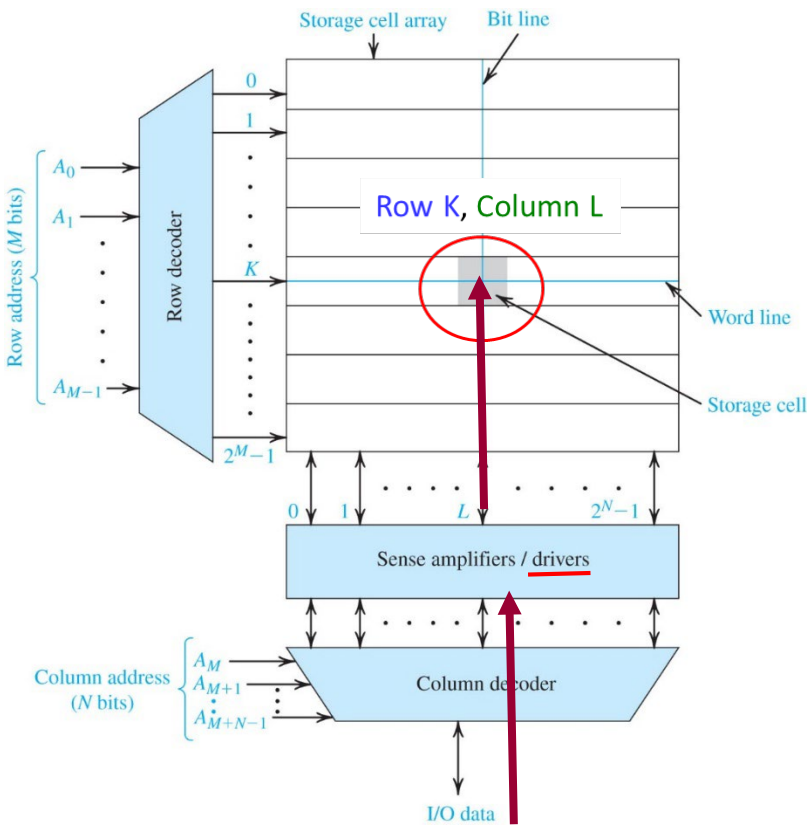

18.3.1 **Random-Access Memory Cells**

- There are basically two types of MOS RAM: Static RAM (SRAM) and Dynamic RAM (DRAM) … <u>we will only examine SRAM in this class</u>

- The SRAM cell is composed of a latch and two access (NMOS switch) transistors (Q5 and Q6) controlled by word line (W)

- Data on the bit line (B) and its inverse ($\overline{B}$) can to written to or read from the latch (Q and $\overline{Q}$)

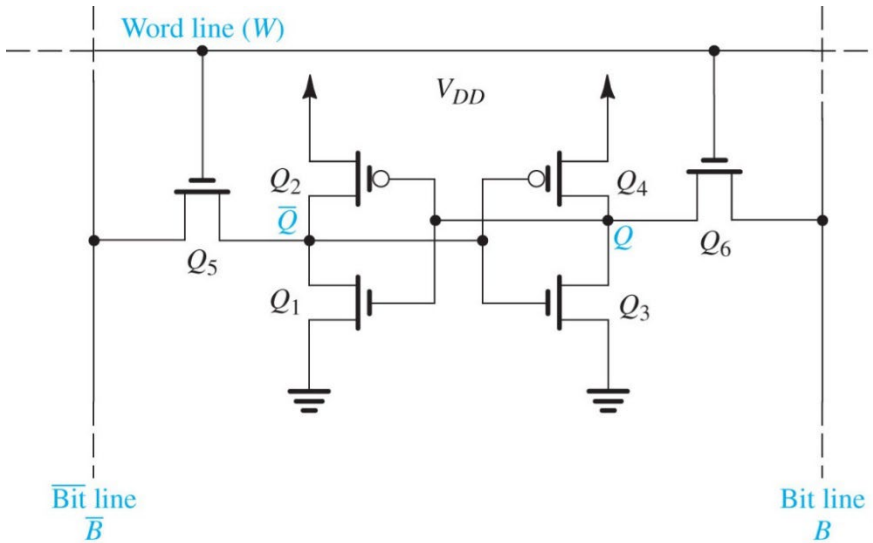

18.3.1 **SRAM Cell like an SR FF**

- The architecture of a SRAM cell is essentially the same as an clocked SR Flip Flop

SRAM

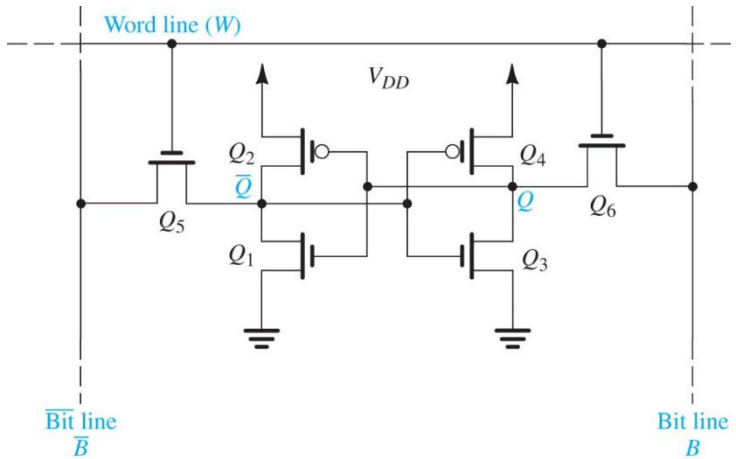

SR Flip Flop

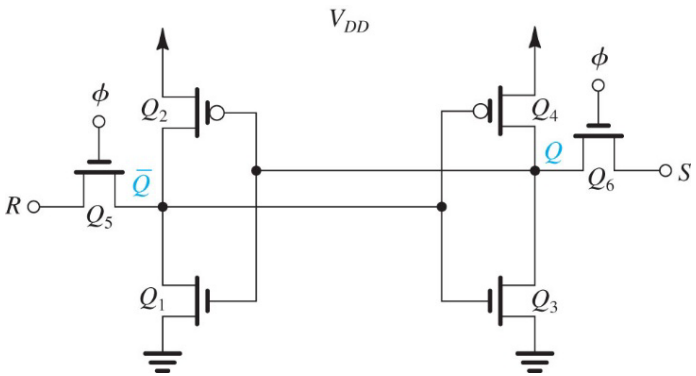

- Word line for SRAM and ϕ (clock) for SR FF both control access transistors
- $\overline{B}$ for SRAM is similar to R for SR FF conn and B is similar to S

16-Mbit (1 M × 16) Static RAM

Features

- Very high speed: 55 ns
- Wide voltage range: 1.65 V to 2.25 V
- Ultra low standby power
  - Typical standby current: 1.5 µA
  - Maximum standby current: 12 µA
- Ultra low active power
  - Typical active current: 2.2 mA at f = 1 MHz
- Easy memory expansion with $\overline{CE}_1$, CE_2, and $\overline{OE}$ features
- Automatic power down when deselected
- CMOS for optimum speed and power
- Offered in Pb-free 48-ball very fine ball grid array (VFBGA) packages

Functional Description

The CY62167EV18 is a high performance CMOS static RAM organized as 1M words by 16 bits. This device features advanced circuit design to provide ultra low active current. This is ideal for providing More Battery Life™ (MoBL®) in portable applications such as cellular telephones. The device also has an automatic power down feature that reduces power consumption by 99 percent when addresses are not toggling. Place the device into standby mode when deselected ($\overline{CE}_1$ HIGH or CE_2 LOW or both BHE and BLE are HIGH). The input and output pins (I/O_0 through I/O_{15}) are placed in a high impedance state when: the device is deselected ($\overline{CE}_1$HIGH or CE_2 LOW); outputs are disabled (OE HIGH); both Byte High Enable and Byte Low Enable are disabled ($\overline{BHE}$, $\overline{BLE}$ HIGH); and a write operation is in progress ($\overline{CE}_1$ LOW, CE_2 HIGH and $\overline{WE}$ LOW).

To write to the device, take Chip Enables ($\overline{CE}_1$ LOW and CE_2 HIGH) and Write Enable ($\overline{WE}$) input LOW. If Byte Low Enable ($\overline{BLE}$) is LOW, then data from I/O pins (I/O_0 through I/O_7) is written into the location specified on the address pins (A_0 through A_{19}). If Byte High Enable ($\overline{BHE}$) is LOW, then data from I/O pins (I/O_8 through I/O_{15}) is written into the location specified on the address pins (A_0 through A_{19}).

To read from the device, take Chip Enables ($\overline{CE}_1$ LOW and CE_2 HIGH) and Output Enable ($\overline{OE}$) LOW while forcing the Write Enable ($\overline{WE}$) HIGH. If Byte Low Enable ($\overline{BLE}$) is LOW, then data from the memory location specified by the address pins appears on I/O_0 to I/O_7. If Byte High Enable ($\overline{BHE}$) is LOW, then data from memory appears on I/O_8 to I/O_{15}. See the Truth Table on page 11 for a complete description of read and write modes.

For a complete list of related documentation, click here.

Logic Block Diagram

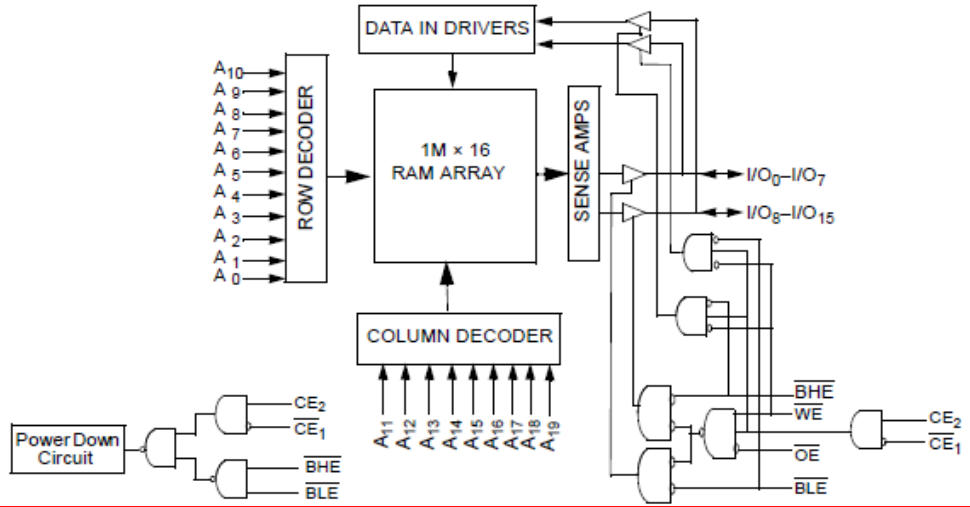

Switching Waveforms

Figure 4. Read Cycle No. 1 (Address Transition Controlled).[22, 23]

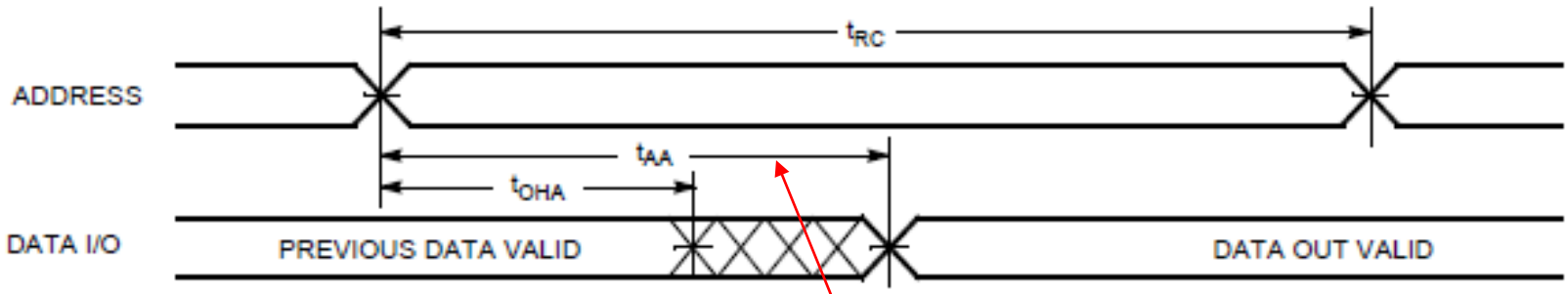

$\mathbf{t}_{AA}$ => Address Change to Data Valid

$\mathbf{t}_{AA}$ = 55 ns