Unit #3
Chapter #18.3: Static Memory (SRAM) Cell
Lecture 16

from **Microelectronic Circuits** Text
by Sedra and Smith
Oxford Publishing

18.3.1 **Static Memory (SRAM) Cells**

- 6 transistors (6T cell)
- 4 transistors (Q1 – Q4) form the latch
- 2 transistors (Q5, Q6) are access (NMOS switch) transistors that are opened and closed by word line
- Data on bit line (B) and $\overline{\text{bit}}$ line ($\overline{B}$) are either written to or read from latch data (Q and $\overline{Q}$)

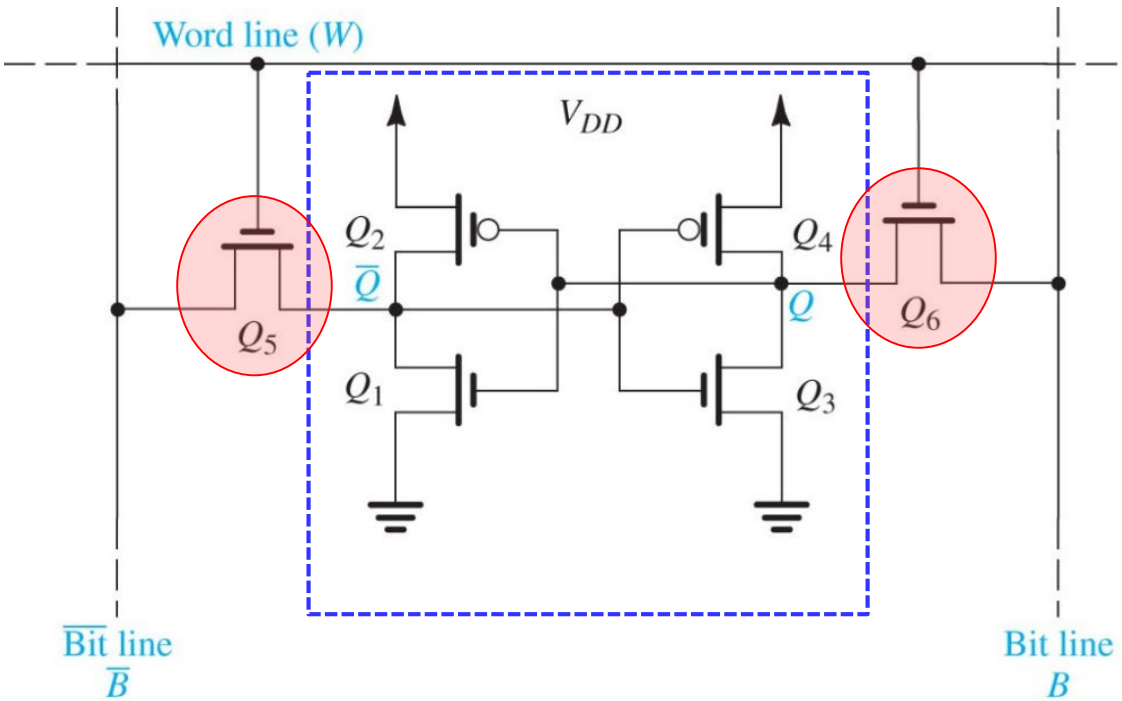

18.3.1 **The Read Operation**

- Assume cell is storing a 1 ($Q = V_{DD}$, $\overline{Q} = 0V$)
- Before read (W going high) B and $\overline{B}$ are typically charged to V_{DD} through the pre-charge transistors (Q_{pc})

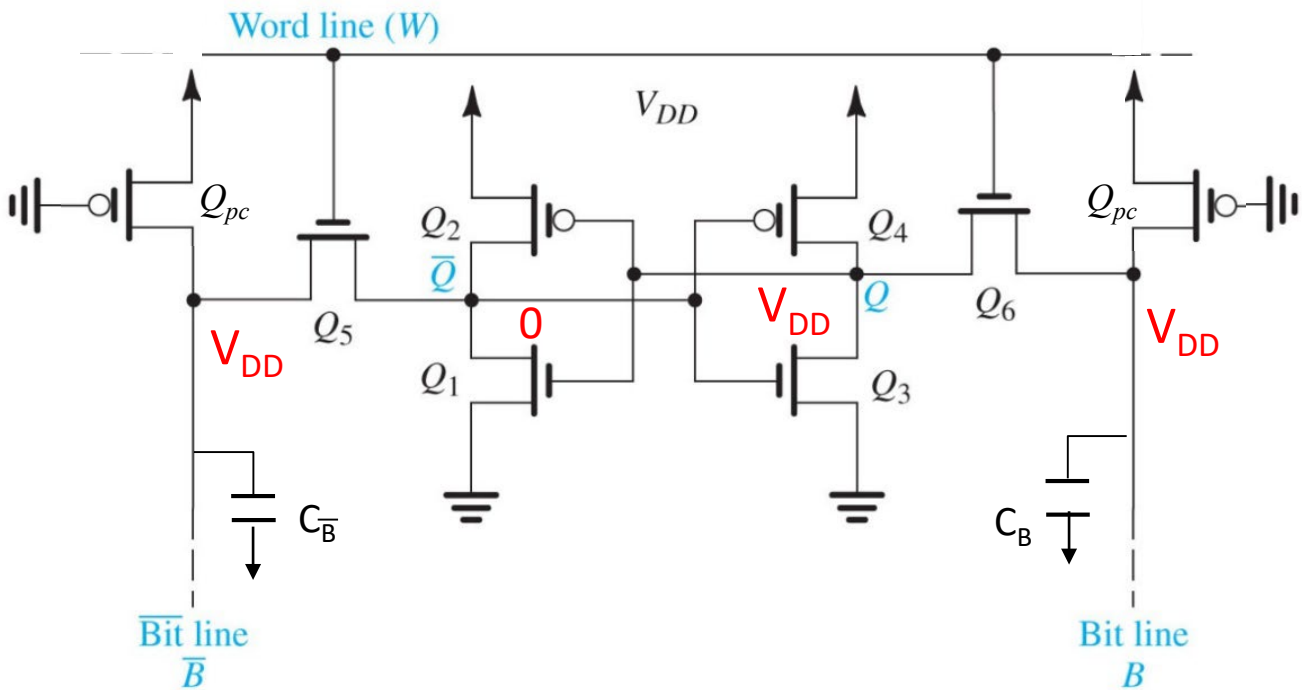

18.3.1 **The Read Operation**

- When W goes high and the access (switch) transistors close
  - Gate voltage on pre-charge transistor goes high floating the bit lines
  - NO drain to source differential across Q6
  - $V_{\overline{B}}$ drops creating a differential input , ΔV, to sense amp

$$V_S = \begin{cases} 1 & \Delta V \geq V_o \\ 0 & \Delta V \leq -V_o \end{cases}$$

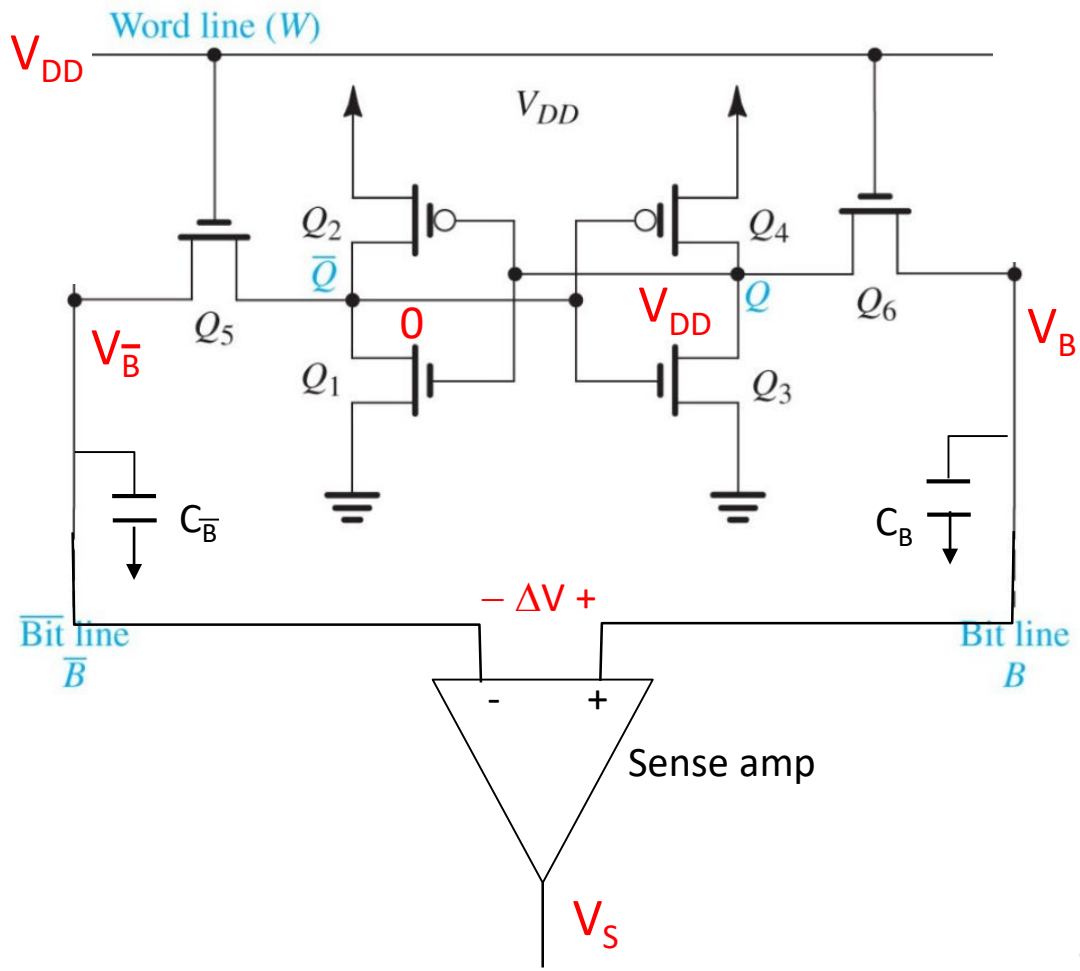

18.3.1 **The Read Operation**

Action is initiated by the dynamic response of Q5 and Q1

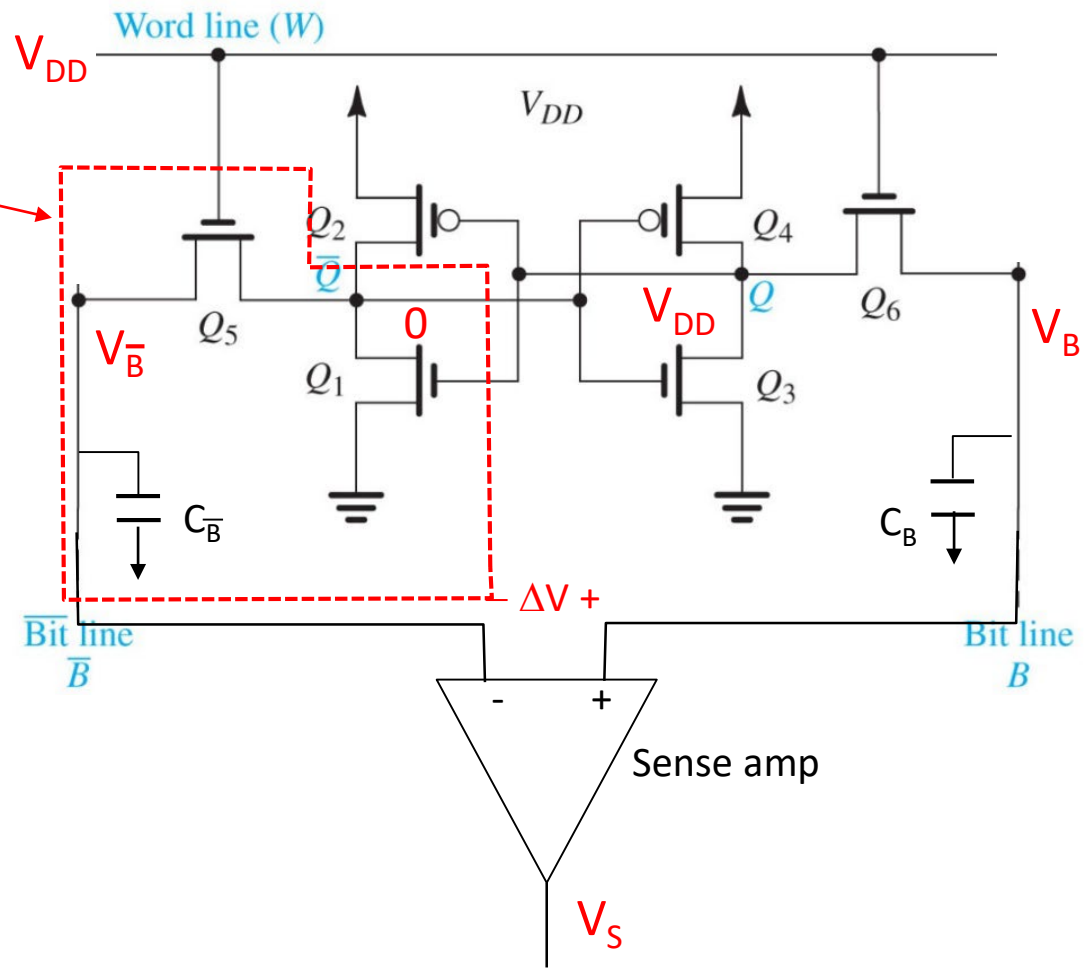

16.3.1 **The Read Operation**

- When W = V_{DD}, current can flow in Q5 (I_5) and Q1 (I_1)
- Need to choose W/L's so that $v_{\overline{Q}} < V_{t0}$
- What is the ratio

$$\frac{(W/L)_5}{(W/L)_1}$$

that will ensure this?

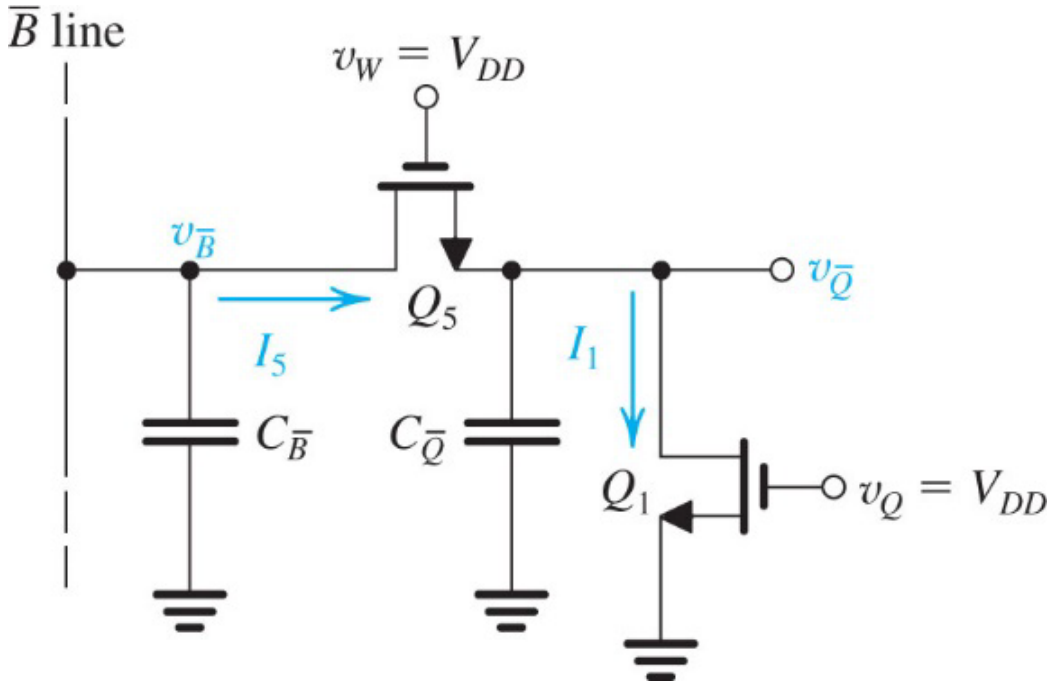

18.3.1 **The Read Operation**

- $v_{\overline{Q}}$ is maximized when $I_5 = I_1$, no more current onto $C_{\overline{Q}}$

- Sense amp trip threshold, V_o, is less than V_t, so Q5 always in saturation as $v_{\overline{B}}$ drops and Q1 in triode .. so

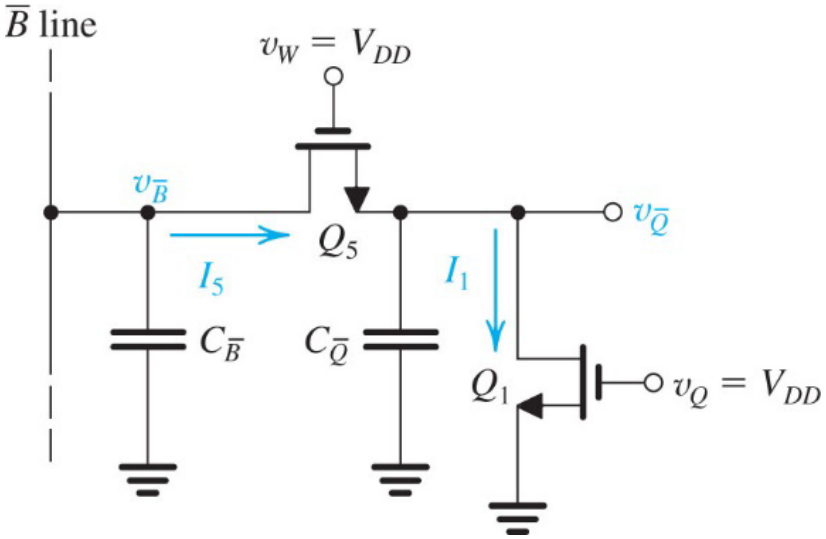

$$\frac{(W/L)_5}{2}\left(V_{DD} - V_t - V_{\overline{Q}}\right)^2 = (W/L)_1\left[\left(V_{DD} - V_{t0}\right)V_{\overline{Q}} - \frac{1}{2}V_{\overline{Q}}^{\,2}\right]$$

$$\frac{V_{\overline{Q}}}{V_{DD} - V_{t0}} = 1 - \frac{1}{\sqrt{1 + \frac{(W/L)_5}{(W/L)_1}}}$$

Note: we are neglecting the body effect here .. which is ok for this analysis

18.3.1 **The Read Operation**

- Since we are designing to have $v_{\bar{Q}} \leq V_{t0}$ then the correct sizing for the read operation is one that sets

$$\frac{(W/L)_a}{(W/L)_n} = \frac{(W/L)_5}{(W/L)_1} = \frac{(W/L)_6}{(W/L)_3} \leq \frac{1}{\left(1 - \frac{V_{t0}}{(V_{DD} - V_{t0})}\right)^2} - 1$$

Note: Since the situation for Q6 and Q3 is the same, we establish this general sizing condition for the access (a) and NMOS (n) latch transistors

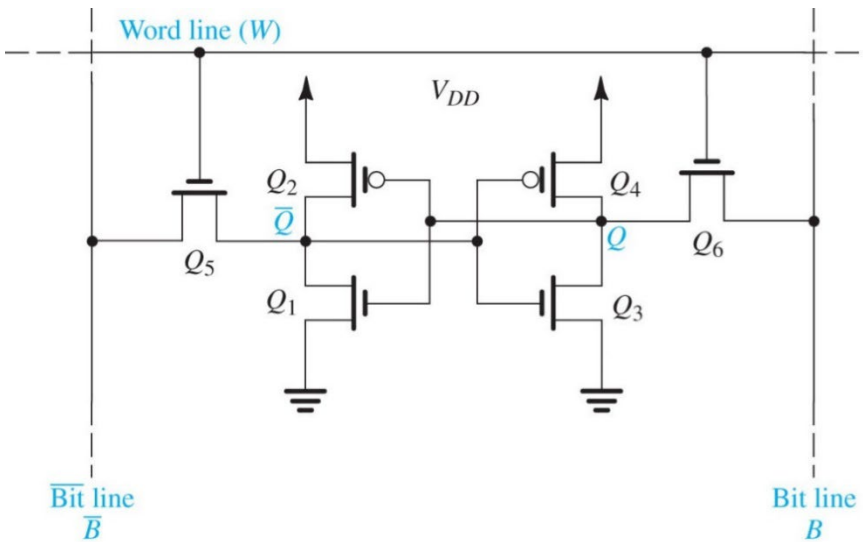

18.3.1 **Read Speed**

Timing diagrams during read

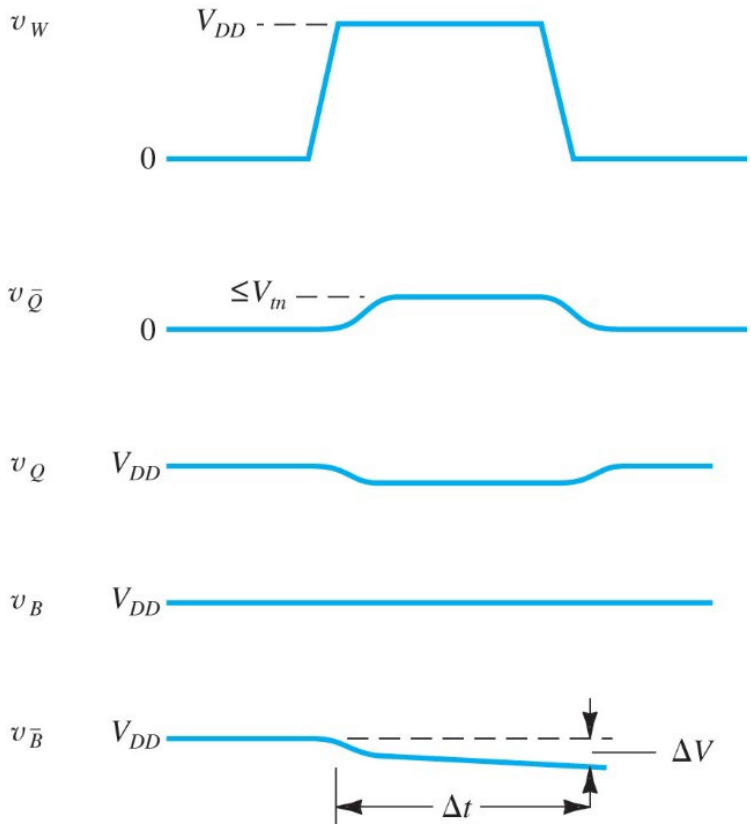

- How long does it take for v_B to drop V_o?

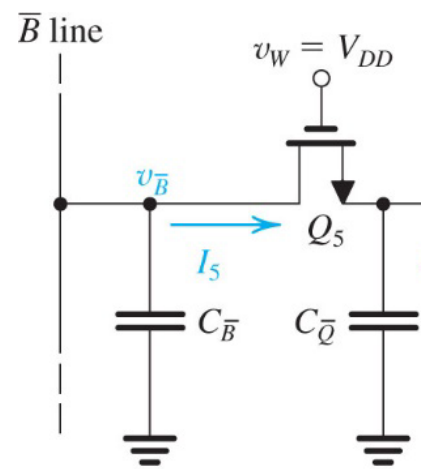

$$I_5 \Delta t = C_{\bar{B}} \Delta V$$

$$\boxed{\Delta t_{read} = \frac{C_{\bar{B}} V_o}{I_5}}$$

18.3.1 **The Write Operation**

- Assume cell is storing a 1 ($Q = V_{DD}$, $\overline{Q} = 0V$)
- We want the change the memory state so we want to write a 0 ($Q = 0$ V, $\overline{Q} = V_{DD}$)
- So before W goes high, the SRAM drivers will set $v_B = 0$ and $v_{\overline{B}} = V_{DD}$

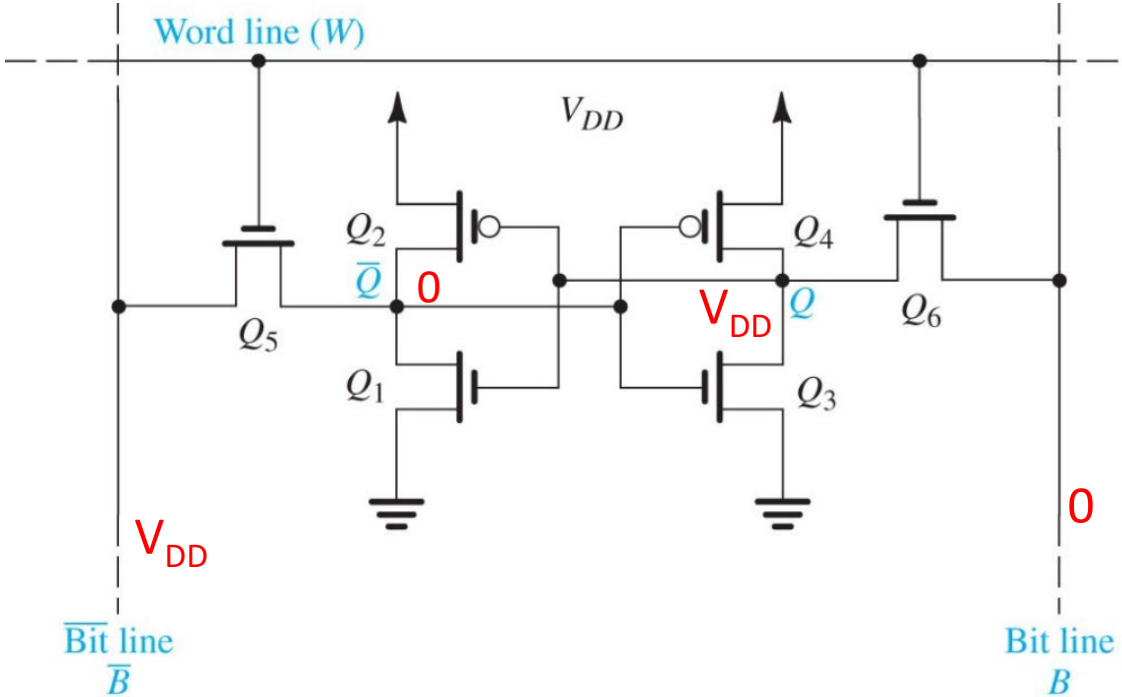

18.3.1 **The Write Operation**

- To absolutely ensure switching of latch we need

$$v_Q < V_{t0}$$

$$or$$

$$v_{\overline{Q}} > V_{DD} - V_{t0}$$

- .. and we only need to consider these parts

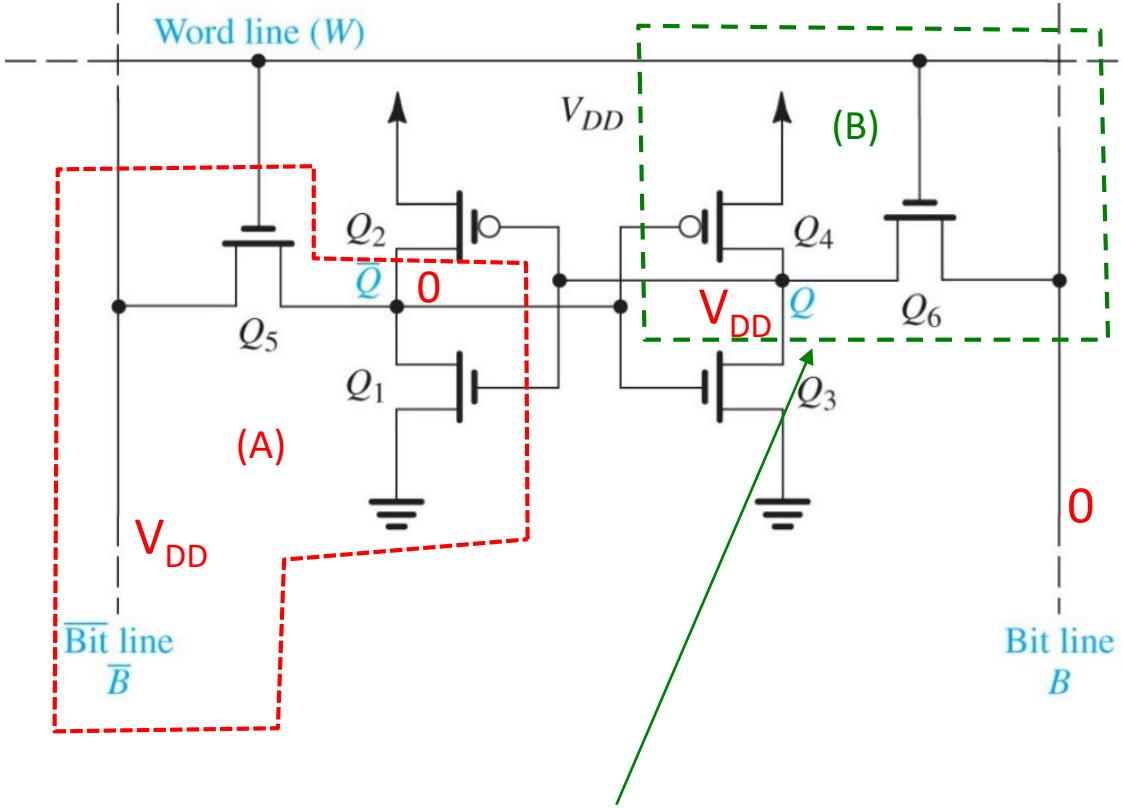

Since we have already come up with a sizing relation between Q5 and Q1 for the read operation, we focus on the sizing between access and PMOS latch transistors in part B

18.3.1 **The Write Operation**

- Need to choose W/L's so that $v_Q < V_{t0}$ when $I_4 = I_6$
- If this is the case, Q4 is in saturation and Q6 in triode when $I_4 = I_6$

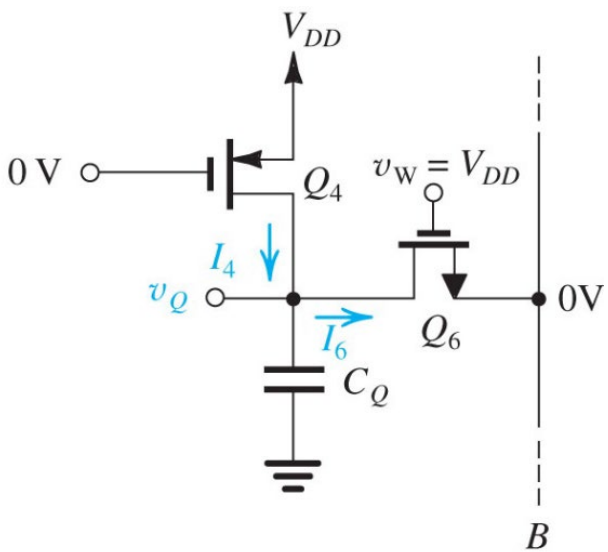

$$\frac{1}{2}k_p'\frac{(W/L)_4}{2}(V_{DD}-V_{t0})^2 = k_n'(W/L)_6\left[(V_{DD}-V_{t0})V_Q - \frac{1}{2}V_Q^{\,2}\right]$$

$$\frac{V_Q}{V_{DD}-V_{t0}} = 1-\sqrt{1-\frac{k_p'}{k_n'}\frac{(W/L)_4}{(W/L)_6}}$$

Note: we don't even need to worry about the body effect here ..

18.3.1 **The Write Operation**

- Since we are designing to have $v_Q \le V_{t0}$ then the correct sizing for the write operation is one that sets

$$\frac{(W/L)_p}{(W/L)_a} = \frac{(W/L)_2}{(W/L)_5} = \frac{(W/L)_4}{(W/L)_6} \le \left(\frac{k_n'}{k_p'}\right)\left[1-\left(1-\frac{V_{t0}}{(V_{DD}-V_{t0})}\right)^2\right]$$

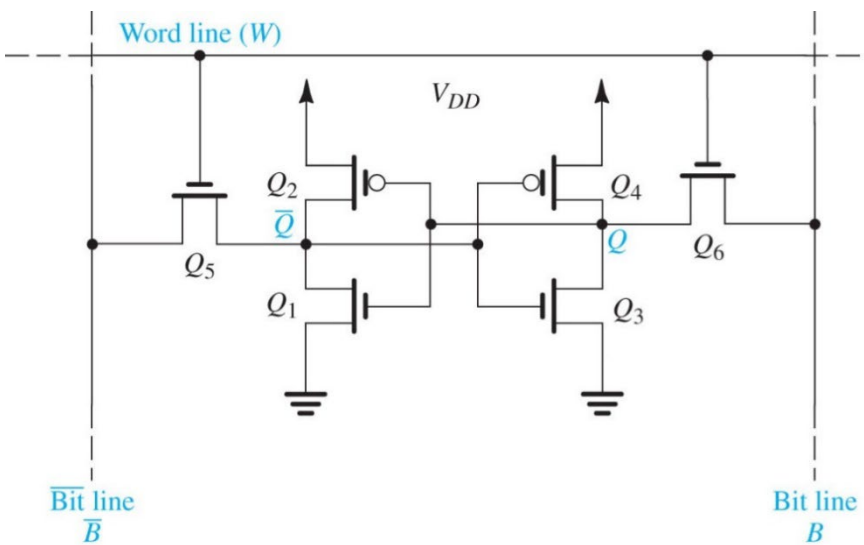

Note: Since the situation for Q2 and Q5 is the same, we establish this general sizing condition for the access (a) and PMOS (p) latch transistors

18.3.1 **Rule for Sizing Transistors in SRAM**

$$L = L_{\min}$$

$$W_p = W_2 = W_4$$

$$W_n = W_1 = W_3$$

$$W_a = W_5 = W_6$$

$$\frac{W_p}{W_n} = \frac{k_n'}{k_p'}$$

Matching transistors in latch

$$\boxed{\frac{W_a}{W_n} \le \frac{1}{\left(1 - \frac{V_{t0}}{(V_{DD} - V_{t0})}\right)^2} - 1}$$
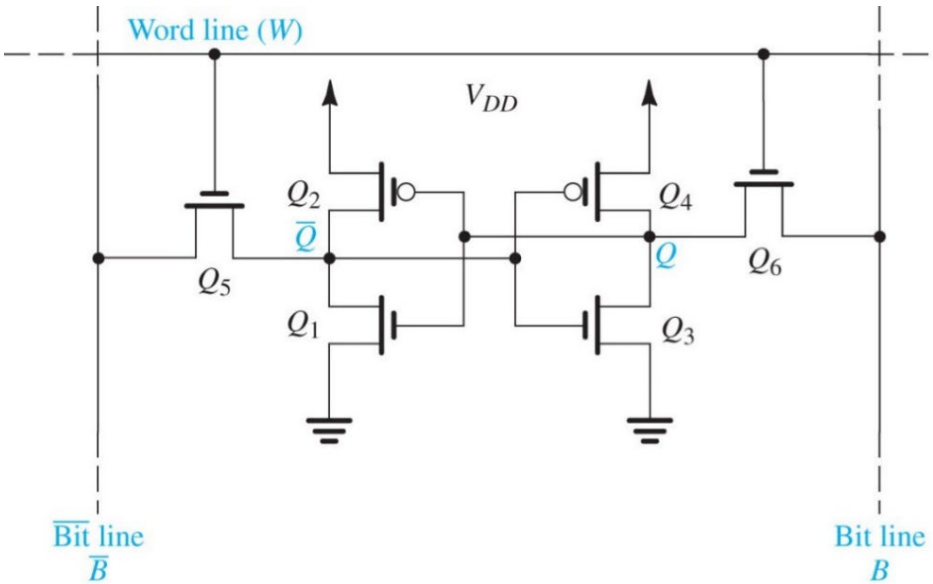
$$\boxed{\frac{W_p}{W_a} \le \left(\frac{k_n'}{k_p'}\right)\left[1 - \left(1 - \frac{V_{t0}}{(V_{DD} - V_{t0})}\right)^2\right]}$$