Unit #4
Chapter #7 and #8: Integrated Circuit (IC) Amplifiers

from **Microelectronic Circuits** Text
by Sedra and Smith
Oxford Publishing

Introduction

- **IN THIS UNIT YOU WILL LEARN ABOUT**
  - The basic principles of MOSFET amplifiers.
  - The small signal model of the MOSFET.
  - Three basic amplifier configurations and the characterization of the amplifier as a functional block.
  - Amplifier IC biasing – current sources and mirrors.
  - The basic gain cell – common source amplifier.
  - The buffer, common gate and source follower amplifiers.

Unit #4
Chapter #7.1: Basic Amplifier Principles
Lecture 17

from **Microelectronic Circuits** Text
by Sedra and Smith
Oxford Publishing

7.1.2. **Obtaining a Voltage Amplifier**

- **A voltage amplifier generates an output voltage, v_o, which is linearly proportional to an input, v_i**

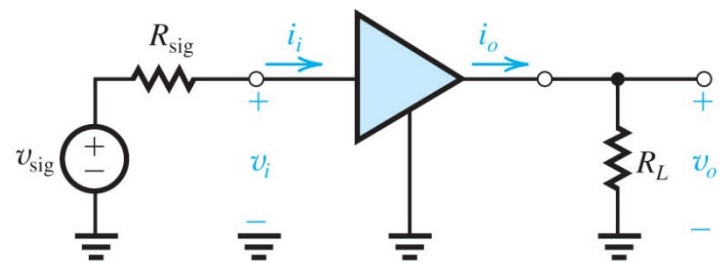

$$v_o = A_v v_i$$

Voltage gain

- **A simple voltage amplifier can be realized by a circuit that looks like an NMOS inverter**

- **For this amplifier the input voltage is applied to the gate and the output is measured at the drain**

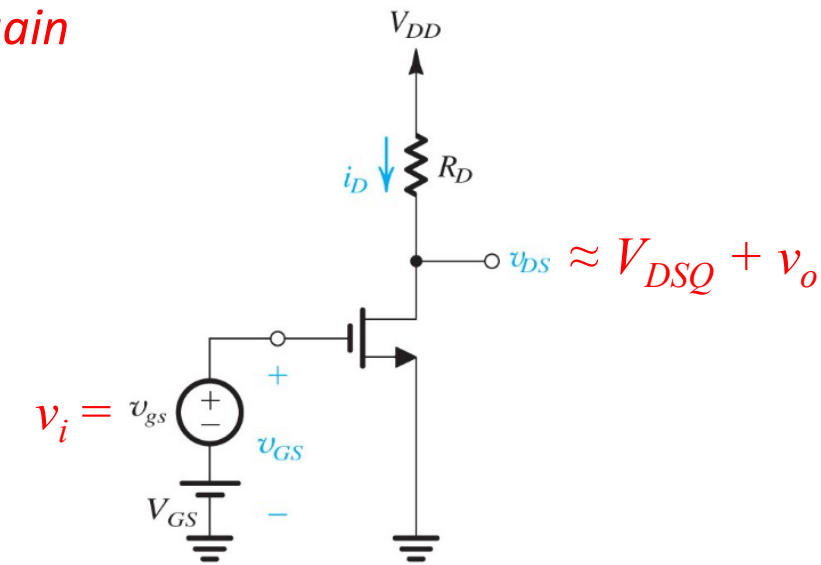

(a)

7.1.3. **Operating Region for Amplifier**

- **For most voltage amplifiers we want $|A_v| = |v_o/v_i|$ to be BIG …**
- **… so given the VTC of this NMOS circuit, unlike the NMOS inverter, we want to operate the transistor in the saturation region where dv_{DS}/dv_{GS} is greatest**

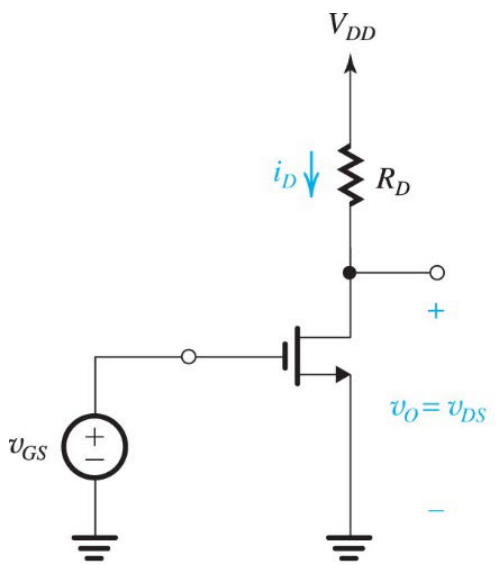

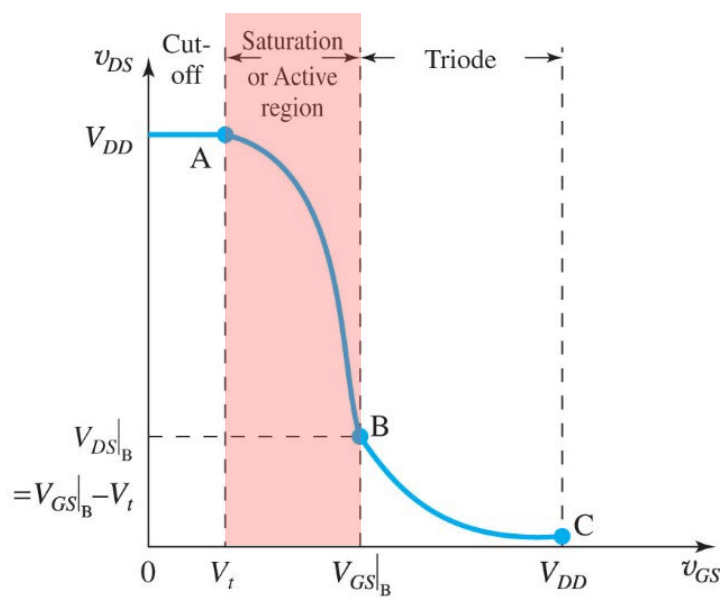

7.1.4. **DC Biasing the Amplifier**

- **The gate voltage is composed of a constant DC voltage, V_{GS}, and input voltage $v_i(t) = v_{gs}(t)$, which can vary with time (ac)**
- **It's the DC voltage, V_{GS}, which sets the transistor in saturation, establishing a DC operating (Q) current**

$$I_{DQ} = \frac{1}{2} k_n \left(V_{GS} - V_t\right)^2$$

- **The Q point drain-source voltage is therefore expressed as**

$$V_{DSQ} = V_{DD} - \frac{1}{2} k_n R_D \left(V_{GS} - V_t\right)^2$$

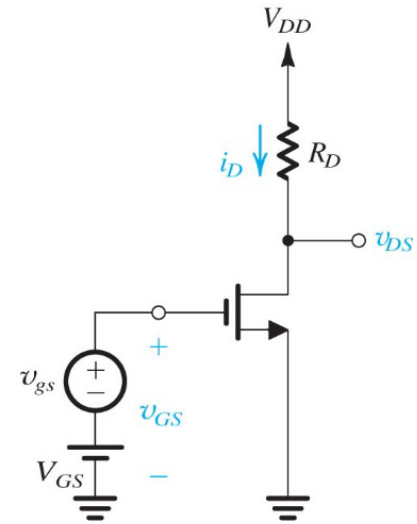

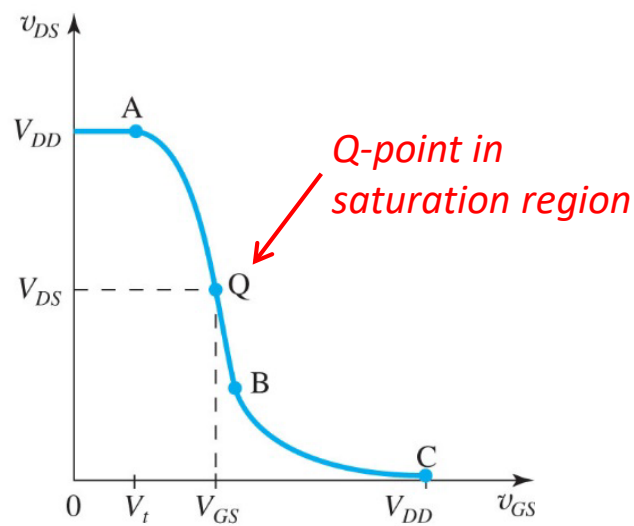

7.1.4. **Small Signal Approximation**

- **If the input voltage $v_i(t) = v_{gs}(t)$ is "small" relative to the DC overdrive voltage, $V_{GS} - V_t = V_{OV}$, then we can make the small signal approximation**

$$
\begin{aligned}
v_{DS} &= V_{DD} - \frac{1}{2} k_n R_D \left(V_{GS} + v_{gs}(t) - V_t\right)^2 \\
&= V_{DD} - \frac{1}{2} k_n R_D \left[V_{OV}{}^2 + 2V_{OV} v_{gs}(t) + v_{gs}(t)^2\right] \\
&\approx V_{DSQ} - \underbrace{k_n R_D V_{OV} v_{gs}(t)}
\end{aligned}
$$

Small signal (ac) drain-source voltage, $v_{ds}(t)$, response to ac input

7.1.4. **Small Signal Voltage Gain**

- **If the small signal approximation is valid then the small signal (ac) output voltage, $v_o(t) = v_{ds}(t)$, will respond *linearly* to the small signal (ac) input voltage, $v_i(t) = v_{gs}(t)$**

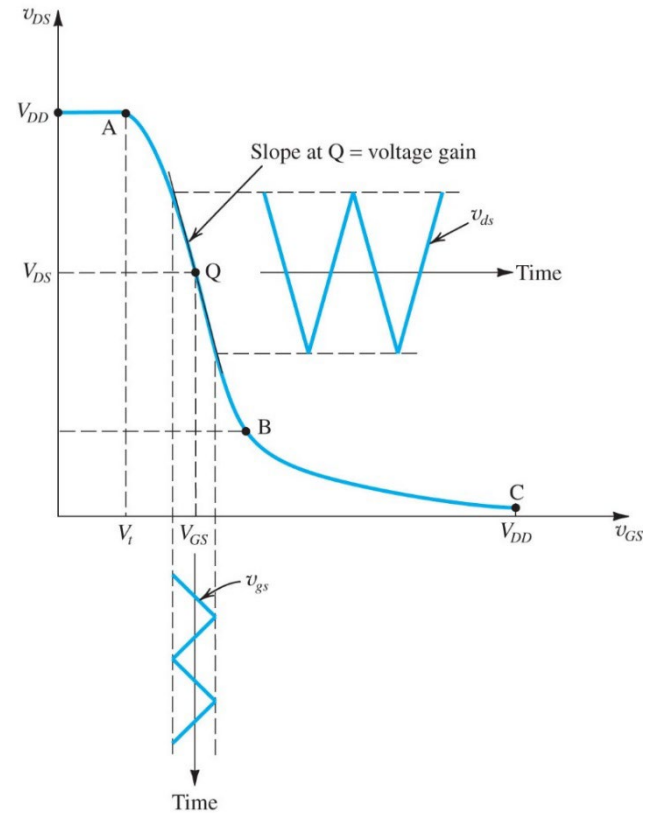

- **This linear relationship *IS* the voltage gain expressible as**

$$v_{ds}(t) = -k_n R_D V_{OV} v_{gs}(t)$$

so

$$A_v = \frac{v_o(t)}{v_i(t)} = \frac{v_{ds}(t)}{v_{gs}(t)} = -k_n V_{OV} R_D$$

Note: for this simple amplifier the voltage gain is negative … it's inverting