Unit #4
Chapter #7.2: Small Signal Model
Lecture 18

from **Microelectronic Circuits** Text
by Sedra and Smith
Oxford Publishing

7.2.1. **Transconductance**

- **Voltage amplification in this simple amplifier arises from the conversion of a "small" input voltage (v_{gs}), into a "small" drain current (i_d)**

- **The small signal approximation allows us to separate total drain current i_D into a DC current (I_{DQ}) and a small signal current (i_d)**

$$i_D \approx I_{DQ} + i_d$$

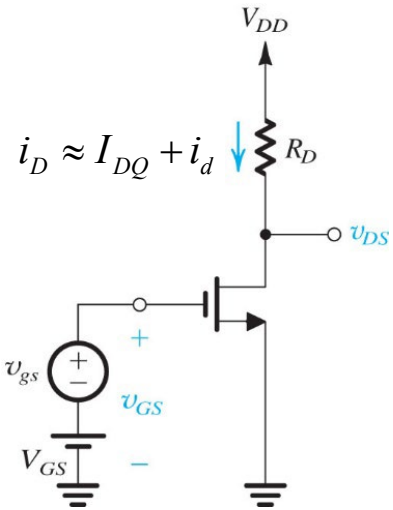

7.2.1. **Transconductance**

- **We saw that I_{DQ} was the DC current response to the DC gate-source voltage, V_{GS}**

$$I_{DQ} = \frac{1}{2} k_n \left(V_{GS} - V_t\right)^2$$

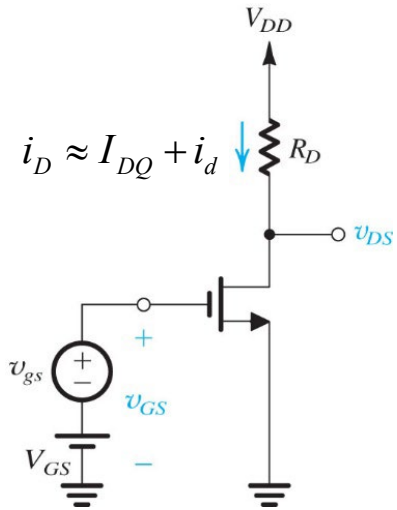

- **The small signal current (i_d) responds to the small signal gate-source voltage, v_{gs}**

$$i_d = g_m v_{gs}$$

g_m is the small signal transconductance of the MOSFET

7.2.1. **Deriving g_m**

How do we get g_m? ***With the small signal approximation***

$$i_D = \frac{1}{2}k_n\left(V_{GS}+v_{gs}-V_t\right)^2$$

$$= \frac{1}{2}k_n\left(V_{GS}-V_t\right)^2 + k_n\left(V_{GS}-V_t\right)v_{gs} + \cancel{\frac{1}{2}k_n v_{gs}^{\ 2}} \quad (1)$$

The small signal approximation is valid if $v_{gs} << 2\left(V_{GS}-V_t\right) = 2V_{OV}$

and (1) is approximated as $i_D \approx I_{DQ} + i_d = \frac{1}{2}k_n\left(V_{GS}-V_t\right)^2 + k_n\left(V_{GS}-V_t\right)v_{gs}$

$$i_D \approx I_{DQ} + g_m v_{gs}$$

where

$$\boxed{g_m = k_n\left(V_{GS}-V_t\right) = k_n'(W/L)V_{OV} = \sqrt{2k_n'(W/L)I_{DQ}}}$$

7.2.1. **Other ways of understanding g_m**

- **g_m can be understood graphically as the slope of the i_D vs V_{GS} tangent line at I_{DQ}**

- **So we can also derive g_m by taking the derivative of i_D vs V_{GS} at $i_D = I_{DQ}$**

$$g_m \equiv \left.\frac{\partial i_D}{\partial v_{GS}}\right|_{v_{GS}=V_{GS}}$$

$$= \frac{d\left[\frac{1}{2}k_n(V_{OV})^2\right]}{dV_{GS}}$$

$$= k_n'\left(\frac{W}{L}\right)V_{OV}$$

Which is the same expression!

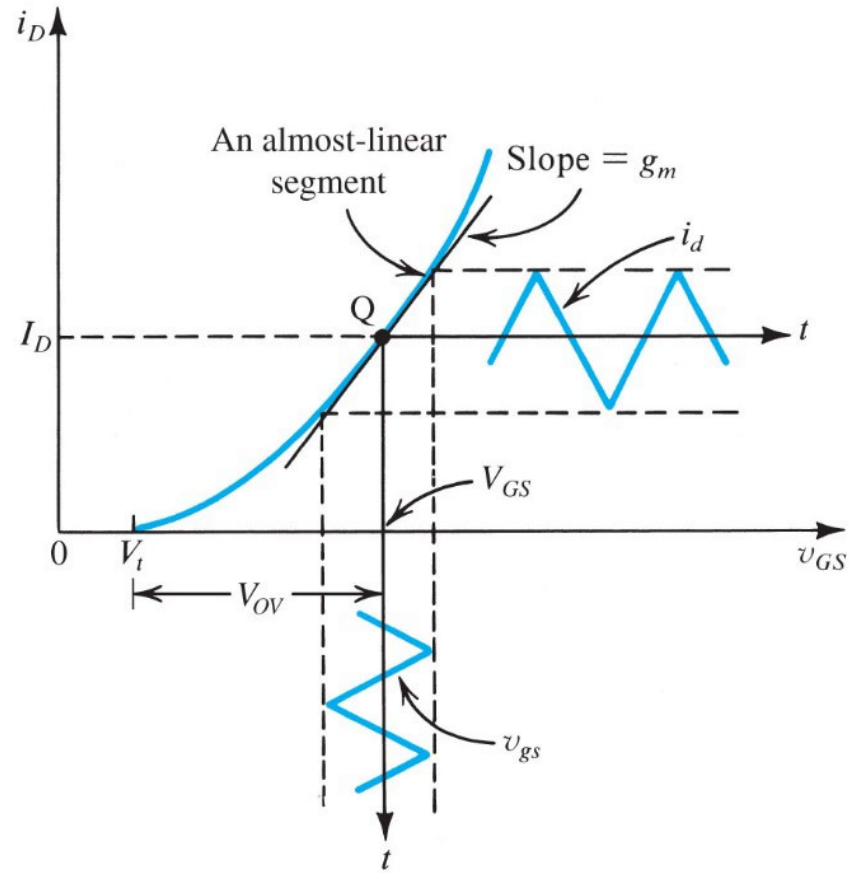

7.2.1. **Impact of Channel Length Modulation**

- **Recall from Lecture 2, that when channel length modulation is included (which you need to do in analog) the drain current is**

$$i_D \approx \left(I_{DSQ} + g_m v_{gs}\right)\left(1 + \frac{v_{DS}}{V_A}\right) = \left(I_{DSQ} + g_m v_{gs}\right)\left(1 + \lambda v_{DS}\right)$$

- **In order to correctly model the drain current, we also have to include the effect of a small signal drain-source voltage**

$$i_D \approx \left(I_{DSQ} + g_m v_{gs}\right)\left(1 + \frac{V_{DSQ}}{V_A} + \frac{v_{ds}}{V_A}\right)$$

$$\approx \underbrace{I_{DSQ} + I_{DSQ}\frac{V_{DSQ}}{V_A}}_{\text{DC (Q) Current}} + \underbrace{I_{DSQ}\frac{v_{ds}}{V_A} + g_m v_{gs} + g_m v_{gs}\frac{V_{DSQ}}{V_A} + g_m v_{gs}\frac{v_{ds}}{V_A}}_{\text{Small signal (ac) current}}$$

7.2.1. **Impact of Channel Length Modulation**

- **Luckily, when doing analysis, we can typically drop several parts of this expression**

For DC (Q) Current $I_D \approx I_{DSQ} \;\; since \;\; \frac{V_{DSQ}}{V_A} << 1$

$$i_d = I_{DSQ}\frac{v_{ds}}{V_A} + g_m v_{gs} + \cancel{g_m v_{gs}\frac{V_{DSQ}}{V_A}} + \cancel{g_m v_{gs}\frac{v_{ds}}{V_A}}$$

For small signal (ac) current

$$i_d \approx I_{DSQ}\frac{v_{ds}}{V_A} + g_m v_{gs} \;\; since \;\; \frac{v_{ds}}{V_A} << 1 \;\; and \;\; I_{DSQ} >> g_m v_{gs}$$

- **Recall that the small signal output resistance is** $r_o \approx \frac{V_A}{I_{DSQ}}$

  So, the small signal drain current including channel length modulation is

$$i_d \approx \frac{v_{ds}}{r_o} + g_m v_{gs}$$

7.2.1. **Hybrid-π Small Signal Model**

- **Now we are ready to create a small signal model for the MOSFET**
- **If we only consider the circuit small signal (ac) response, we can model the MOSFET as a linear circuit …**

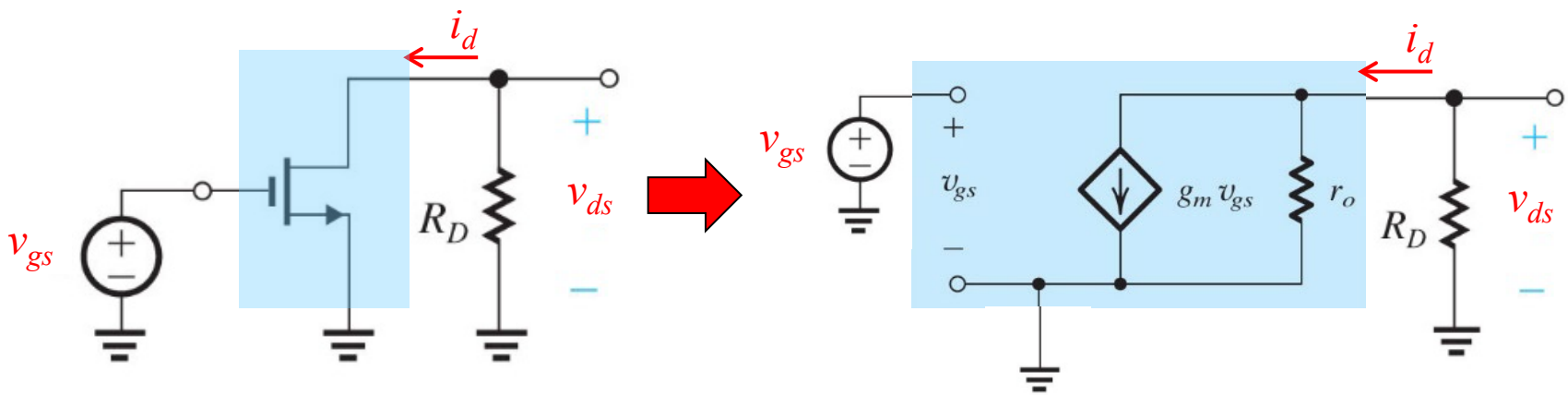

$$i_d \approx \frac{v_{ds}}{r_o} + g_m v_{gs}$$

7.2.1. **The "T" Small Signal Model**

- **"Through a simple circuit transformation, it is possible to develop and alternative small signal model for the MOSFET**

These are equivalent circuits

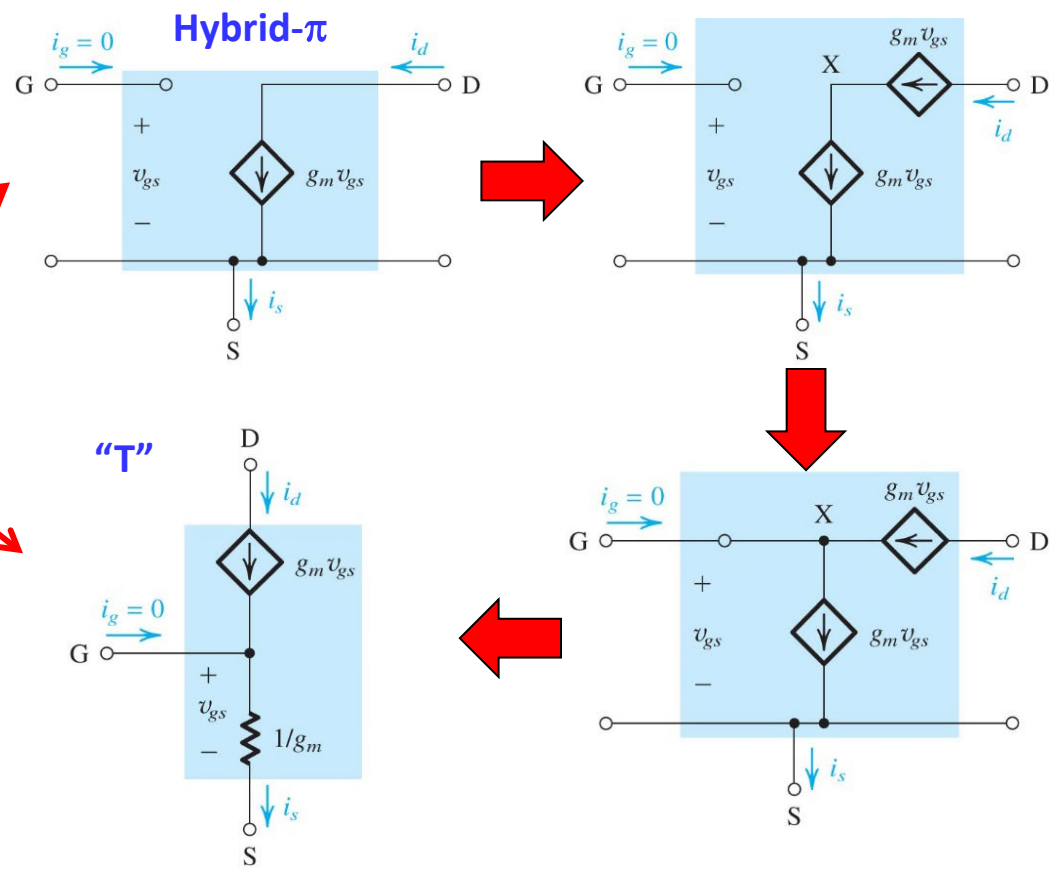

7.2.1. The "T" Model with r_o

- **If channel length modulation is included, the "T" model becomes**

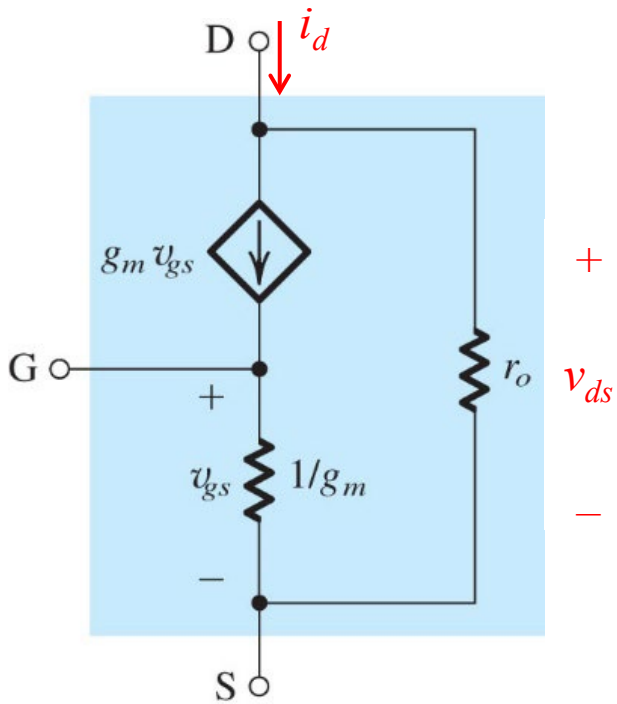

Note: for some amplifier the "T" model is more intuitive and easier to work with

7.2.1. **Modeling the Body Effect**

- **We have just seen that the small signal drain current, i_d, can be a function of both v_{gs} and v_{ds}**

- **… but i_d is also a function of any small signal voltage across the body-source junction, v_{bs}, which introduces a second small signal transconductance, g_{mb}**

Small signal model of nMOSFET with g_{mb} included

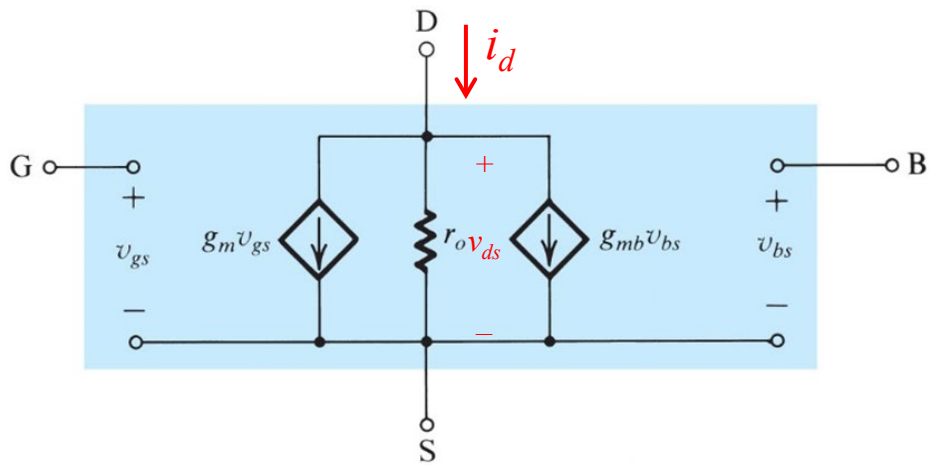

7.2.1. **Deriving g_{mb}**

$$V_t(v_{bs}) = V_{t0} + \gamma(\sqrt{2\varphi_f + V_{SB} - v_{bs}} - \sqrt{2\varphi_f})$$

$$i_D = \frac{1}{2} k_n (v_{GS} - V_t(v_{bs}))^2$$

$$\boxed{g_{mb}} = \left.\frac{\partial i_D}{\partial v_{BS}}\right|_{\substack{v_{GS}=const \\ v_{BS}=V_{BS}}} = \boxed{k_n V_{OV} \left(\frac{\gamma}{2\sqrt{2\varphi_f + V_{SB}}} \right) = \chi g_m}$$

where

$$\chi = \frac{\gamma}{2\sqrt{2\varphi_f + V_{SB}}}$$

7.2.3. **Summary Table (MOSFETs Amplifiers)**

Table 7.1 Systematic Procedure for the Analysis of Transistor Amplifier Circuits

1. Eliminate the signal source and determine the dc operating point of the transistor.
2. Calculate the values of the parameters of the small-signal model.
3. Eliminate the dc sources by replacing each dc voltage source by a short circuit and each dc current source by an open circuit.
4. Replace the transistor with one of its small-signal, equivalent-circuit models. Although any of the models can be used, one might be more convenient than the others for the particular circuit being analyzed. This point is made clearer in Section 7.3.
5. Analyze the resulting circuit to determine the required quantities (e.g., voltage gain, input resistance).

Table 7.2 Small-Signal Models of the MOSFET

Small-Signal Parameters

NMOS transistors

- **Transconductance:**

$$g_m = \mu_n C_{ox} \frac{W}{L} V_{OV} = \sqrt{2\mu_n C_{ox} \frac{W}{L} I_D} = \frac{2I_D}{V_{OV}}$$

- Output resistance:

$$r_o = V_A / I_D = 1/\lambda I_D$$

PMOS transistors

Same formulas as for NMOS *except* using $|V_{OV}|$, $|V_A|$, $|\lambda|$ and replacing μ_n with μ_p.

Small-Signal, Equivalent-Circuit Models

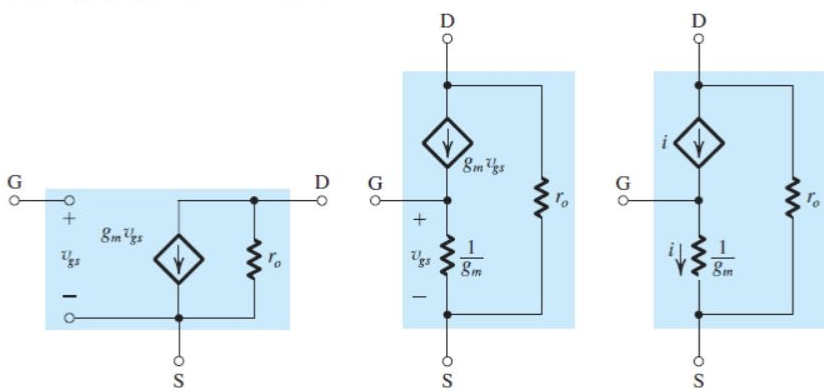

Hybrid-π model

T models