Exercise 7.11

Use the "T" model to show that a MOSFET whose drain is connected to is gate exhibits an incremental resistance of $\frac{1}{gm} \| r_o$

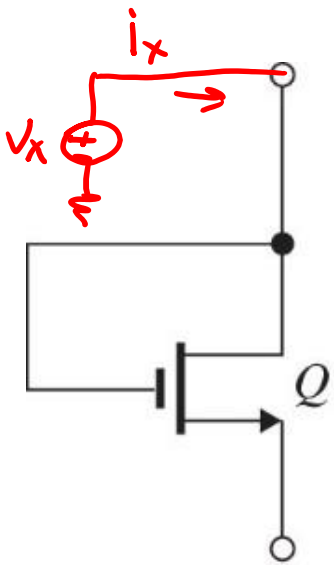

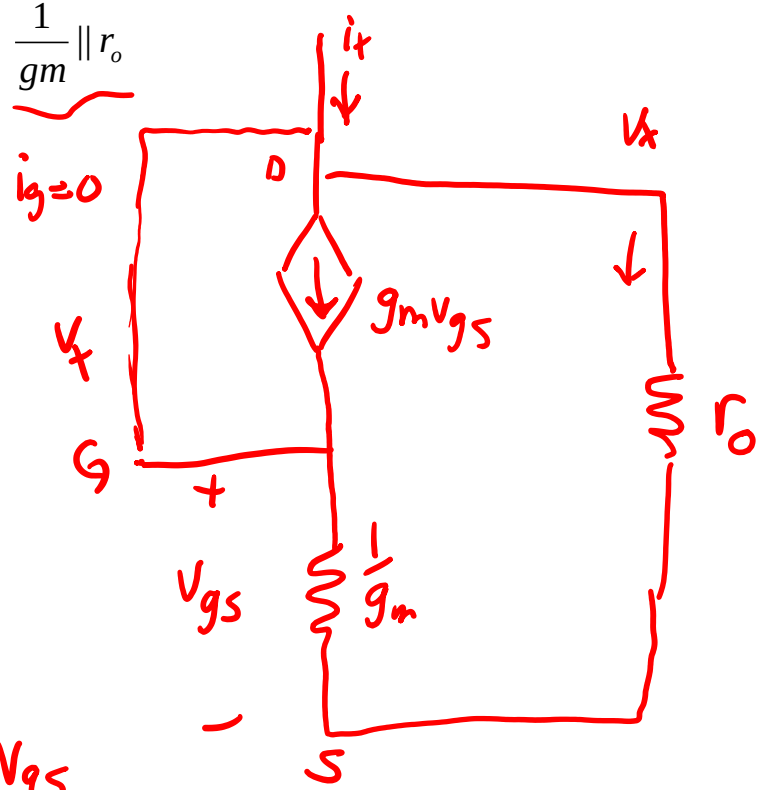

$$v_x = v_{gs}$$

$$i_x = g_m \underset{\overset{\shortparallel}{v_x}}{v_{gs}} + \frac{v_x}{r_o} = v_x\left(g_m + \frac{1}{r_o}\right)$$

$$\frac{v_x}{i_x} = \frac{1}{g_m + \frac{1}{r_o}} = \frac{1}{g_m} \| r_o$$

Exercise 7.4

For the amplifier below let V_{DD} = 5V, R_D = 10 kΩ, V_t = 1V, k_n = 400 uA/V^2, V_{GS} = 2V and λ = 0

a) Find I_D and V_{DS}

$V_{ov} = 2 - 1 = 1V$

$I_D = \frac{k_n}{2} V_{ov}^2 = \frac{400\mu A}{2} \frac{}{V^2} (1)^2 = 200\mu A$

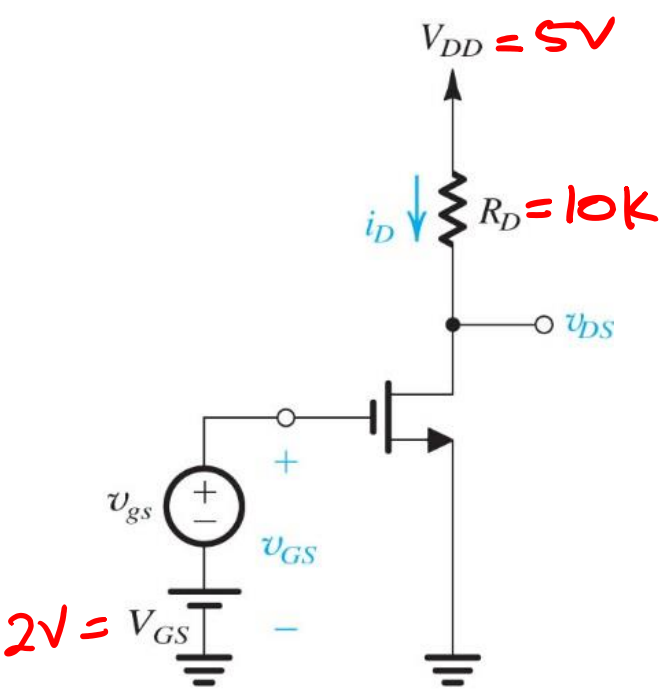

(a)

$V_{DS} = V_{DD} - I_D R_D$

$= 5V - 0.2mA \cdot 10k\Omega = 3V > V_{ov} = 1$

Sat

Exercise 7.4

For the amplifier below let V_{DD} = 5V, R_D = 10 kΩ, V_t = 1V, k_n = 400 uA/V^2, V_{GS} = 2V and λ = 0

b,c) Find g_m and the voltage gain (what if V_A = 50V?)

$V_{ov} = 1$

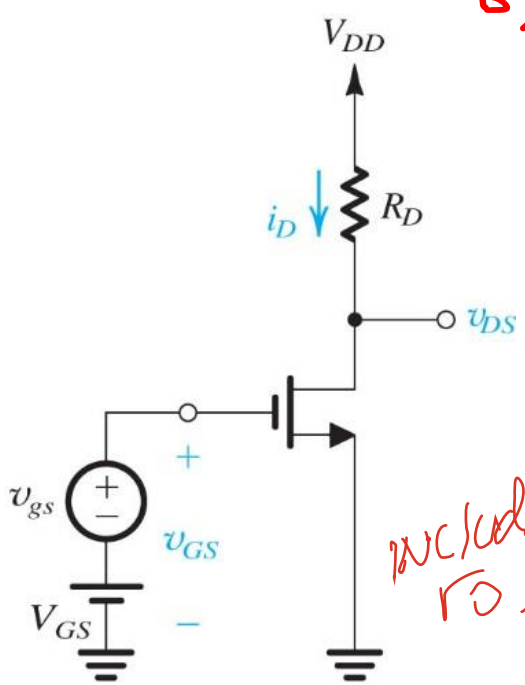

b) $g_m = k_n V_{ov} = 400 \mu A/V$

$g_m = \sqrt{2 k_n I_{DQ}} = \sqrt{2(400 \mu A/V)\, 200 \mu A} = 400 \mu A/V$

c) $A_v = -k_n V_{ov} R_D = -g_m R_D = -0.4 mA/V \cdot 10 k\Omega = -4 V/V$

include r_o?

$r_o = \frac{V_A}{I_{DQ}} = \frac{50V}{200 \mu A} = 250k$

$A_v = -g_m (r_o \| R_D)$

$= -3.86 V/V$

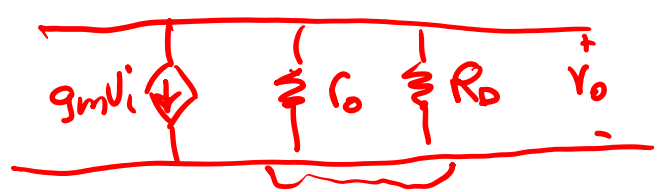

$R_o = r_o \| R_D$

Exercise 7.4

For the amplifier below let V_{DD} = 5V, R_D = 10 kΩ, V_t = 1V, k_n = 400 uA/V^2, V_{GS} = 2V and λ = 0

d) If v_{gs} = 0.2sin(ωt) voltage, what are the min and max values for v_{DS}? Use the S.S. approximation. Is this a reasonable assumption?

$A_v = -4\,V/V$

$V_o = 1\,V$

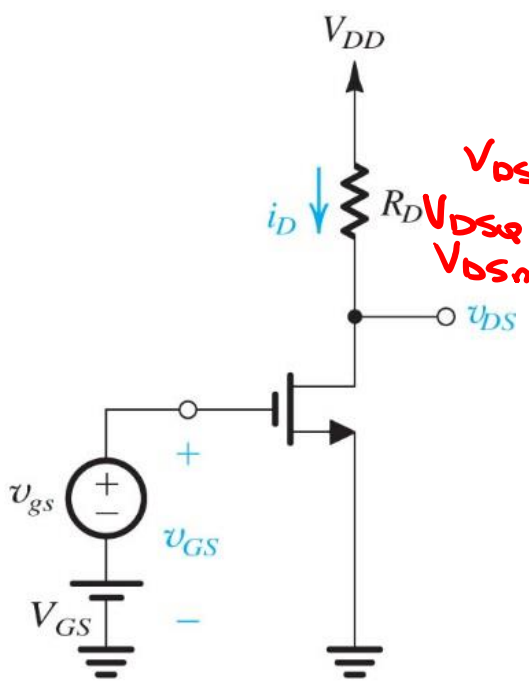

(a)

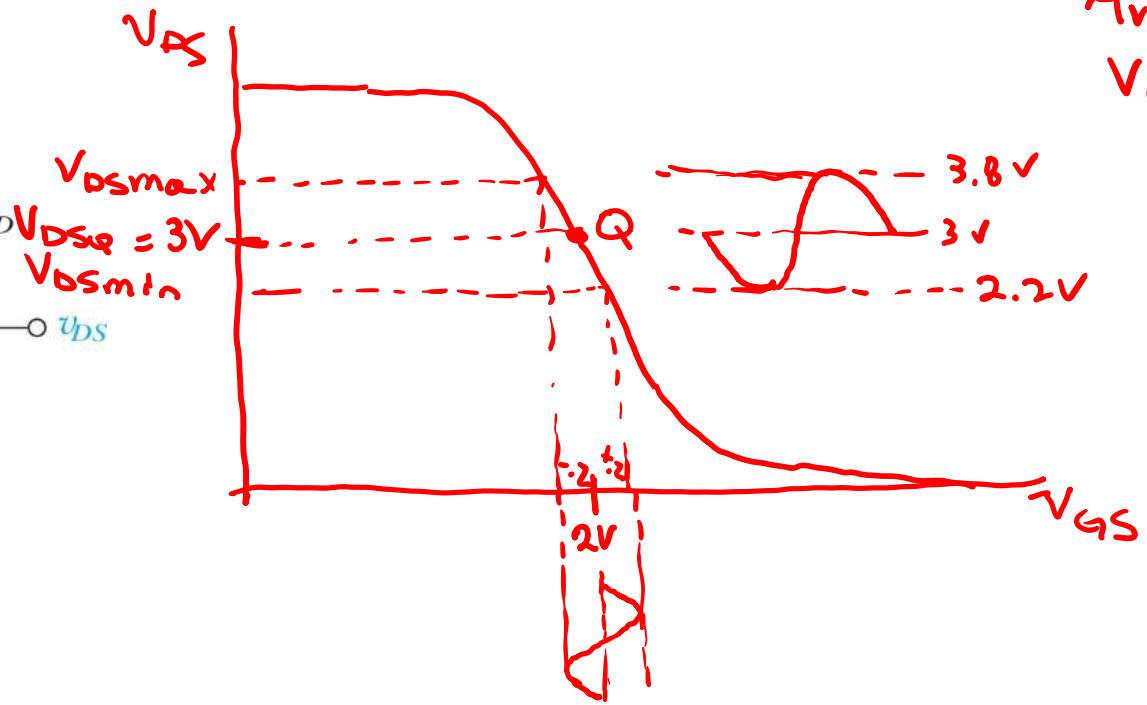

$V_{DSmax} = V_{DSQ} - A_v(0.2) = 3V + 0.8V = 3.8V$

$V_{DSmin} = V_{DSQ} + A_v(0.2) = 3V - 0.8V = 2.2V$

Sm. signal is valid

$0.2 = V_{gs} << 2V_{ov} = 2V$

Sat