Unit #4
Chapter #7.3: Basic Amplifier Configurations
Lecture 19

from **Microelectronic Circuits** Text
by Sedra and Smith
Oxford Publishing

7.3.2. **General Characteristics**

- **We saw previously that for a voltage amplifier there is a linear relationship between v_o and v_i**

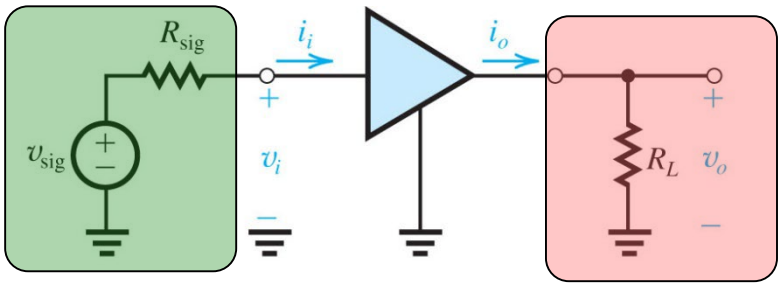

$$v_o = A_v v_i$$

Voltage gain

- **However there are intrinsic features of the amplifier that must be considered to characterize the amplifier response to a non ideal input signal and an external output load**

7.3.2. **Key Intrinsic Features**

- **Inside the amplifier there are always three key characteristics to consider**

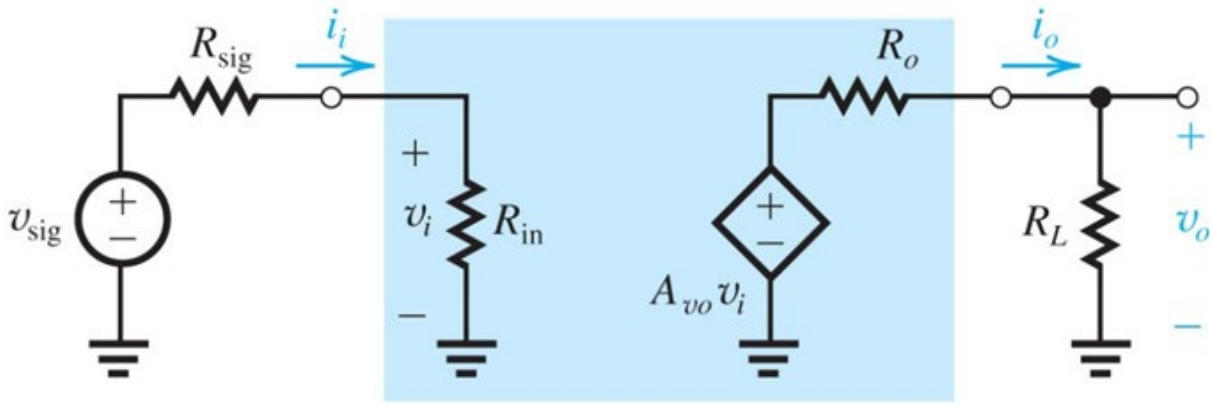

- **Input Resistance -** $R_{in} = \dfrac{v_i}{i_i}$
- **Open Circuit Voltage Gain -** $A_{vo} = \left.\dfrac{v_o}{v_i}\right|_{R_L=\infty}$ *This is the ideal gain … the largest possible*
- **Output Resistance -** R_o

7.3.2. **Output Resistance**

How do we get output resistance?

- **R_o is the Thevenin resistance looking back into the amplifier's output node**

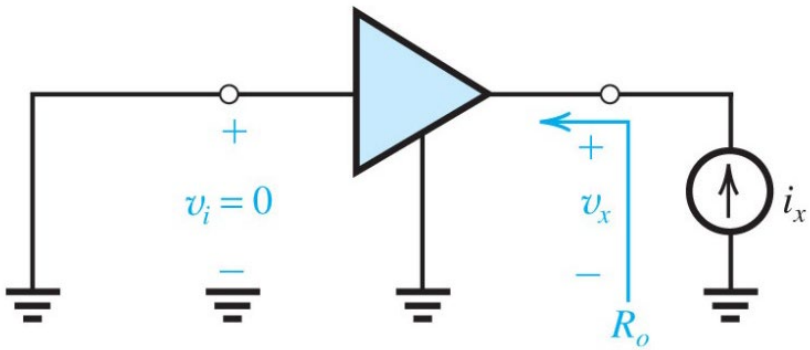

- **Recall to get output resistance we have to short all voltages (and open all current if they exist) …**
- **… and apply a test source to the output**

- **So we set** $v_i = 0V$

and get $R_o = \dfrac{v_x}{i_x}$

Test voltage

Test current

7.3.2. **Voltage Gain Proper**

- **R_o and a non-infinite load resistor, R_L, will cause the voltage gain, v_o/v_i, to be less the A_{vo}**

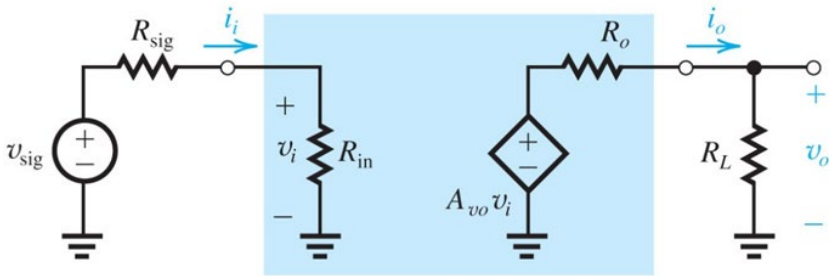

$$A_v = \frac{v_o}{v_i} = A_{vo}\frac{R_L}{R_L + R_o}$$

Note: when we describe voltage gain with the letter "A" we are referring it to the input voltage v_i

- **We want $A_v \approx A_{vo}$**
  - **R_L BIG (although we cannot always control this)**
  - **R_o small** ← *When designing an amplifier with a voltage output (like a voltage amp) we would like to have this if possible*

7.3.2. **Overall Voltage Gain - G_v**

- **The overall voltage gain, G_v, is referred back to the signal input voltage, v_{sig}**

$$G_v = \frac{v_o}{v_{sig}} = \frac{R_{in}}{R_{in} + R_{sig}} A_{vo} \frac{R_L}{R_L + R_o}$$

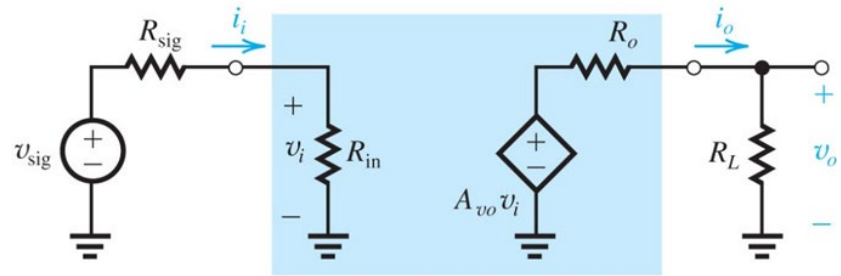

- **We also want $G_v \approx A_v$**
  - **R_{sig} small (although we cannot always control this)**
  - **R_{in} BIG** ← *When designing an amplifier with the largest overall voltage gain we want <u>both</u> R_{in} BIG and R_o small*

7.3.1. **Three Basic Configurations**

1. **The Common Source (CS)**

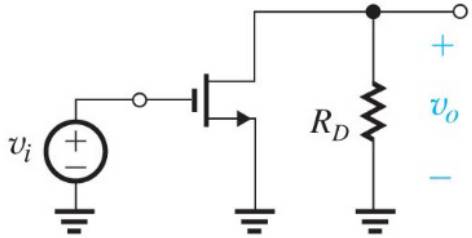

2. **The Common Gate (CG)**

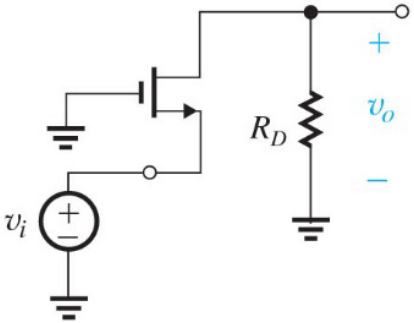

3. **The Common Drain (CD) or Source Follower**

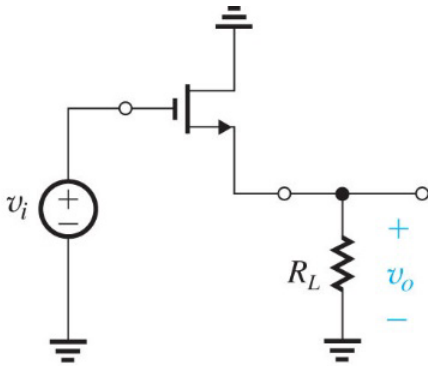

For these amplifiers what are:

- R_{in}
- A_{vo}
- R_o
- A_v
- G_v

7.3.3. **The Common Source**

(neglect r_o .. for now)

$$R_{in} = \infty$$

$$v_i = v_{sig}$$

$$v_{gs} = v_i$$

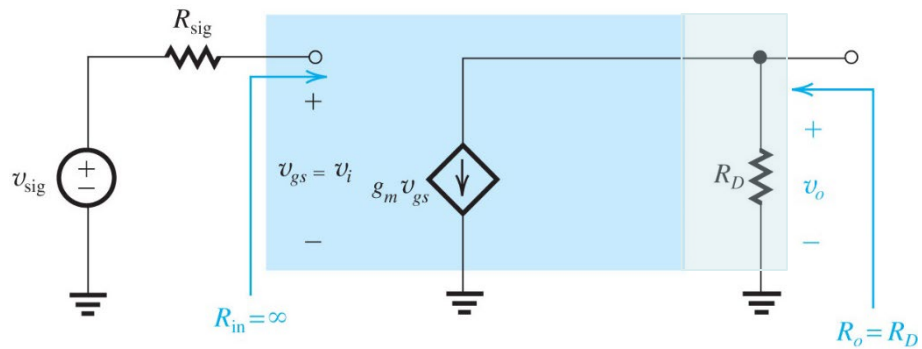

Hybrid-π model for transistor

$$A_{vo} = -g_m R_D$$

$$R_o = R_D$$

$$G_v = A_v = A_{vo} \frac{R_L}{R_D + R_L} = -g_m \left(R_D \parallel R_L \right)$$

7.3.4. **The Common Source with Source Resistor (R_S)** (neglect r_o)

T model for transistor

$$R_{in} = \infty$$

$$i = g_m v_{gs}$$

$$v_{gs} = v_i \frac{1/g_m}{1/g_m + R_S}$$

$$v_o = -iR_D$$

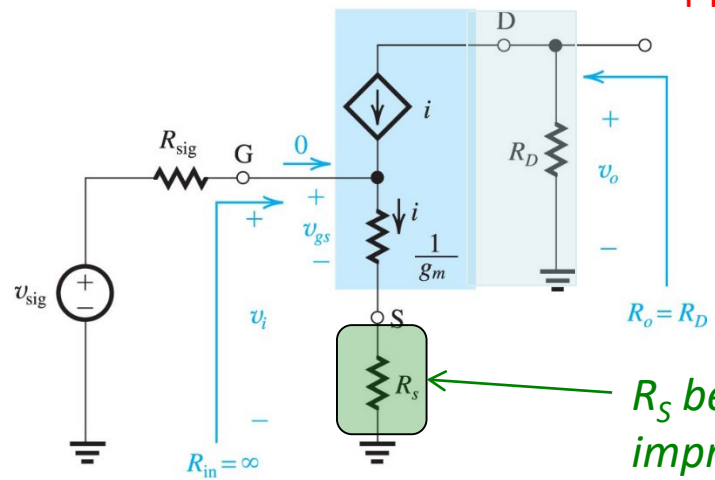

R_S beneficial for improved stability and bandwidth

$$A_{vo} = -\frac{g_m R_D}{1 + g_m R_S}$$

$$R_o = R_D$$

$$G_v = A_v = A_{vo} \frac{R_L}{R_D + R_L} = -g_m \frac{(R_D \parallel R_L)}{1 + g_m R_S}$$

7.3.5. **The Common Gate** (neglect r_o)

Small? Why?

$$R_{in} = 1/g_m$$

$$v_o = -iR_D$$

$$i = -\frac{v_i}{1/g_m}$$

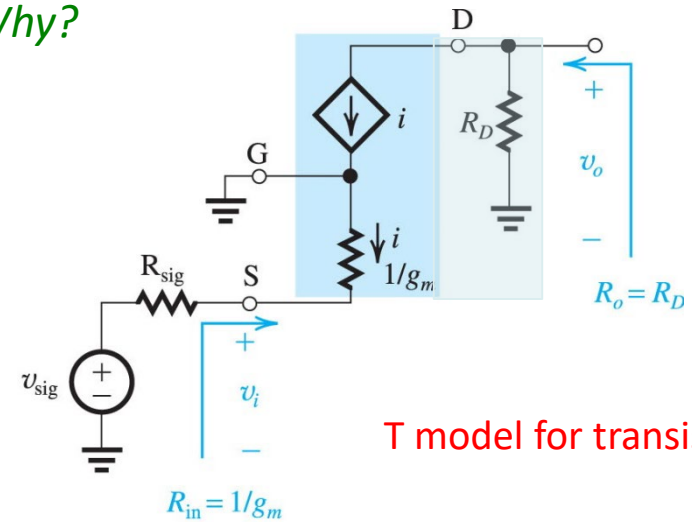

T model for transistor

$$A_{vo} = \frac{v_o}{v_i} = g_m R_D$$

$$R_o = R_D$$

7.3.5. **The Common Gate** (neglect r_o)

$$R_{in} = 1/g_m$$

$$A_{vo} = \frac{v_o}{v_i} = g_m R_D$$

$$R_o = R_D$$

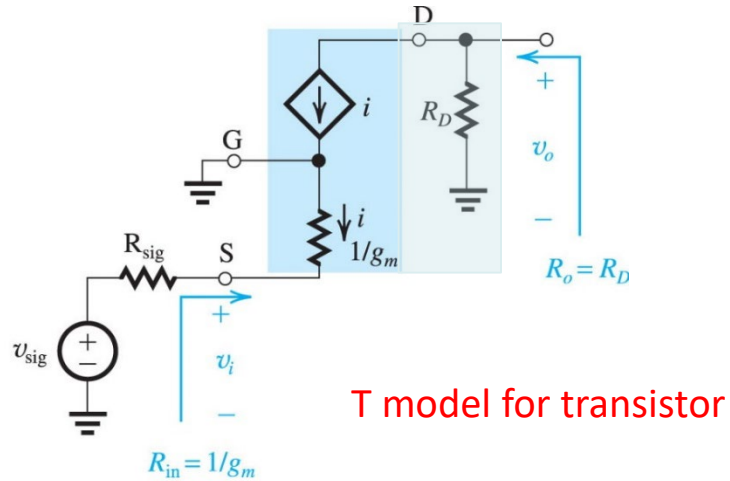

T model for transistor

$$A_v = A_{vo}\frac{R_L}{R_D + R_L} = g_m(R_D \parallel R_L)$$

$$G_v = \frac{R_{in}}{R_{in} + R_{sig}} A_v = \frac{1/g_m}{1/g_m + R_{sig}} g_m(R_D \parallel R_L)$$

7.3.6. **The Source Follow** (neglect r_o)

$$R_{in} = \infty$$

$$v_o = v_i \frac{R_L}{R_L + 1/g_m}$$

$$if\ R_L = \infty$$

$$A_{vo} = 1$$

$$R_o = 1/g_m$$

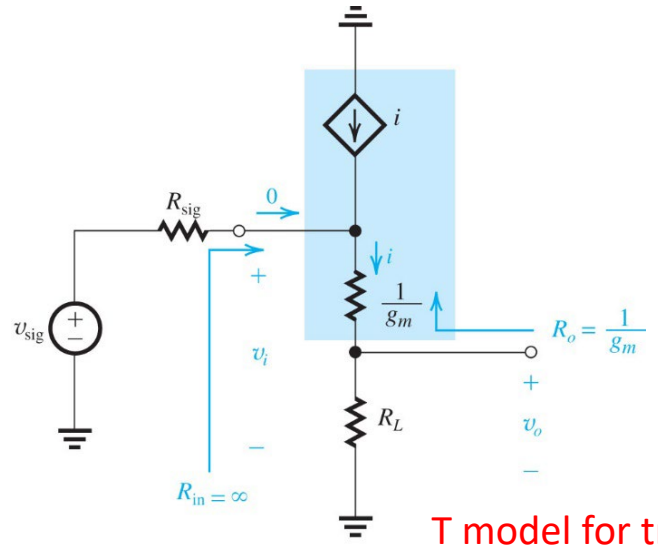

T model for transistor

$$G_v = A_v = A_{vo} \frac{R_L}{1/g_m + R_L} = \frac{R_L}{1/g_m + R_L} = \frac{g_m R_L}{1 + g_m R_L}$$

7.3.7. **Summary of Single Stage Amplifier Characteristics**

Table 7.4 Characteristics of MOSFET Amplifiers

Amplifier type	Characteristics[a]				
	R_{in}	A_{vo}	R_o	A_v	G_v
Common source (Fig. 7.35)	∞	$-g_m R_D$	R_D	$-g_m(R_D \parallel R_L)$	$-g_m(R_D \parallel R_L)$
Common source with R_s (Fig. 7.37)	∞	$-\frac{g_m R_D}{1+g_m R_s}$	R_D	$\frac{-g_m(R_D \parallel R_L)}{1+g_m R_s}$ $-\frac{R_D \parallel R_L}{1/g_m + R_s}$	$-\frac{g_m(R_D \parallel R_L)}{1+g_m R_s}$ $-\frac{R_D \parallel R_L}{1/g_m + R_s}$
Common gate (Fig. 7.39)	$\frac{1}{g_m}$	$g_m R_D$	R_D	$g_m(R_D \parallel R_L)$	$\frac{R_D \parallel R_L}{R_{sig} + 1/g_m}$
Source follower (Fig. 7.42)	∞	1	$\frac{1}{g_m}$	$\frac{R_L}{R_L + 1/g_m}$	$\frac{R_L}{R_L + 1/g_m}$

[a] For the interpretation of R_{in}, A_{vo}, and R_o, refer to Fig. 7.34(b).

Good for voltage amplifiers

Bad for voltage amplifiers

So-so for voltage amplifiers

But we will see that there are other types of amplifiers which "like" these BAD and so-so features