Unit #1
Chapter #5.2: Current-Voltage Characteristics
Lecture 2

from **Microelectronic Circuits** Text
by Sedra and Smith
Oxford Publishing

5.2.1. **Circuit Symbols**

N-channel

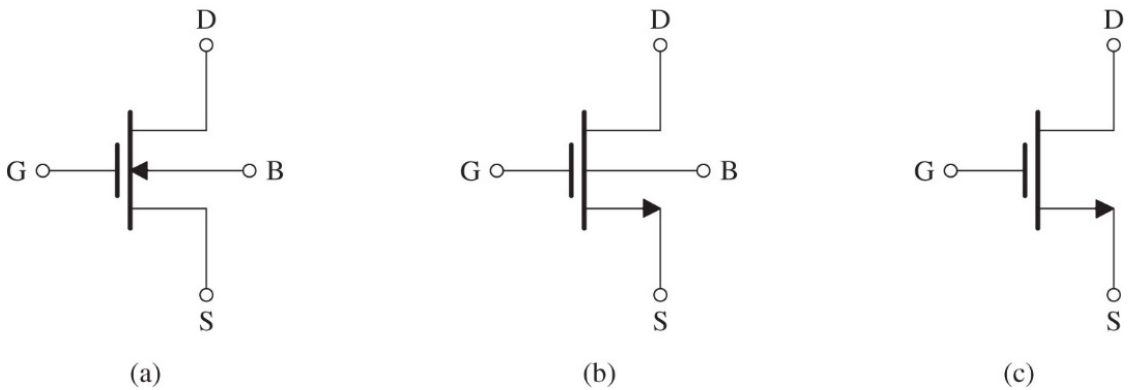

P-channel

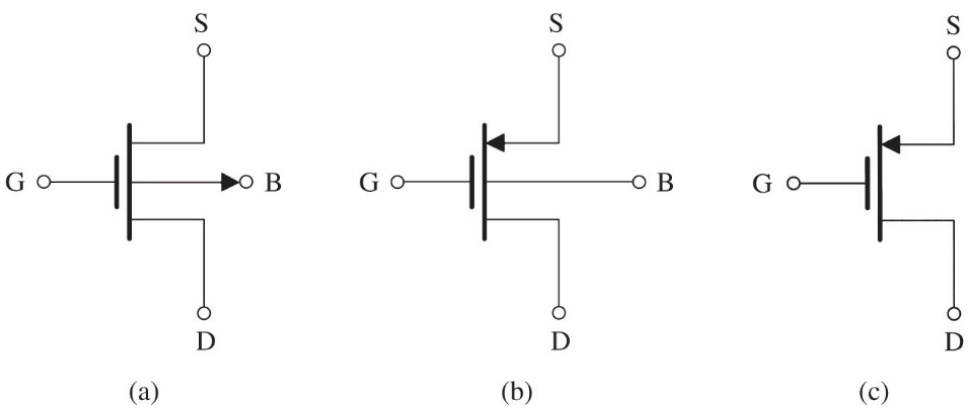

5.2.2. $i_D - v_{DS}$ Characteristics (enhancement model NMOS)

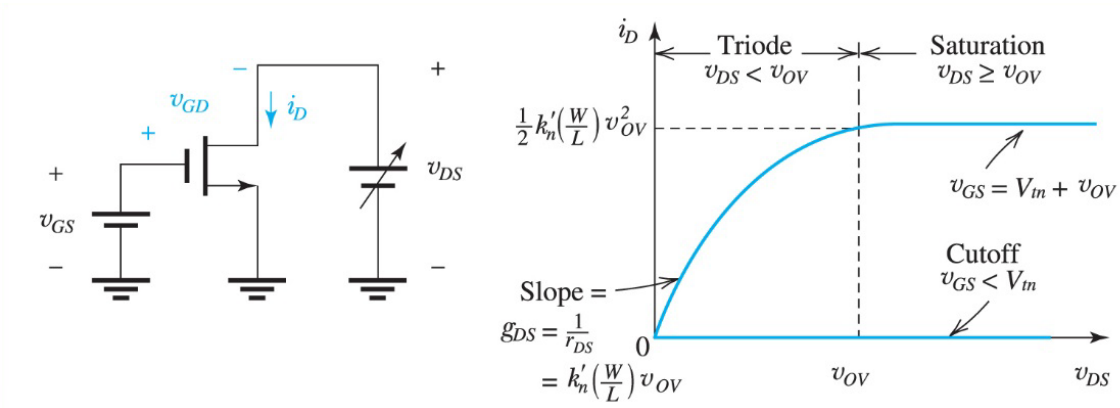

5.2.2. $i_D - v_{DS}$ Characteristics (enhancement model NMOS)

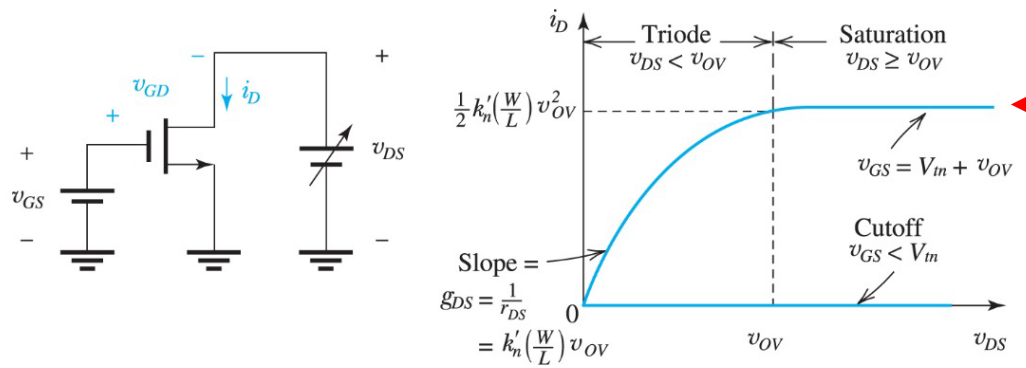

$i_{D,sat} = k_n'(W/L)V_{OV}^2/2$

- $v_{GS} < V_{tn}$: no channel; transistor in cutoff; $i_D = 0$
- $v_{GS} = V_{tn} + v_{OV}$: a channel is induced; transistor operates in the triode region or the saturation region depending on whether the channel is continuous or pinched off at the drain end;

Triode Region

Continuous channel, obtained by:

$$v_{GD} > V_{tn}$$

or equivalently:

$$v_{DS} < v_{OV}$$

Then,

$$i_D = k_n'\left(\frac{W}{L}\right)\left[(v_{GS} - V_{tn})v_{DS} - \frac{1}{2}v_{DS}^2\right]$$

or equivalently,

$$i_D = k_n'\left(\frac{W}{L}\right)\left(v_{OV} - \frac{1}{2}v_{DS}\right)v_{DS}$$

Saturation Region

Pinched-off channel, obtained by:

$$v_{GD} \leq V_{tn}$$

or equivalently:

$$v_{DS} \geq v_{OV}$$

Then

$$i_D = \frac{1}{2}k_n'\left(\frac{W}{L}\right)(v_{GS} - V_{tn})^2$$

or equivalently,

$$i_D = \frac{1}{2}k_n'\left(\frac{W}{L}\right)v_{OV}^2$$

5.2.4. **Channel Length Modeling (NMOS)**

- A more precise model for operation in saturation is

  $i_D = k_n'[W/(L-\Delta L)]V_{OV}^2/2$

- As v_{DS} increases above V_{OV}, the channel length is reduced which increases i_D with v_{DS} in saturation

- This effect is channel length modulation, modeled with the parameter λ

  $i_D = i_{D,sat}\,[1 + \lambda(v_{DS}-V_{OV})]$ (1)

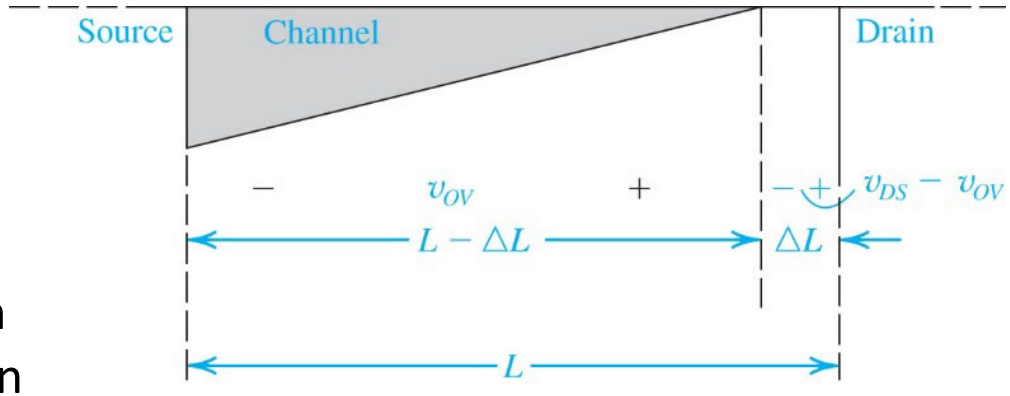

- λ is sometimes described equivalently as Early Voltage, V_A,

  $V_A = 1/\lambda$

  which is proportional to L

  $V_A = V_A'L$

5.2.4. **Channel Length Modeling (NMOS)**

- An approximation for (1) is

$$i_D = i_{D,sat}\,[1 + (v_{DS}-V_{OV})/V_A] \quad (1)$$

$$\approx i_{D,sat}\,(1 + v_{DS}/V_A) \quad (2)$$

- Although (1) is more accurate we will ALWAYS use (2) – note circuit simulators use either (1) or (2)

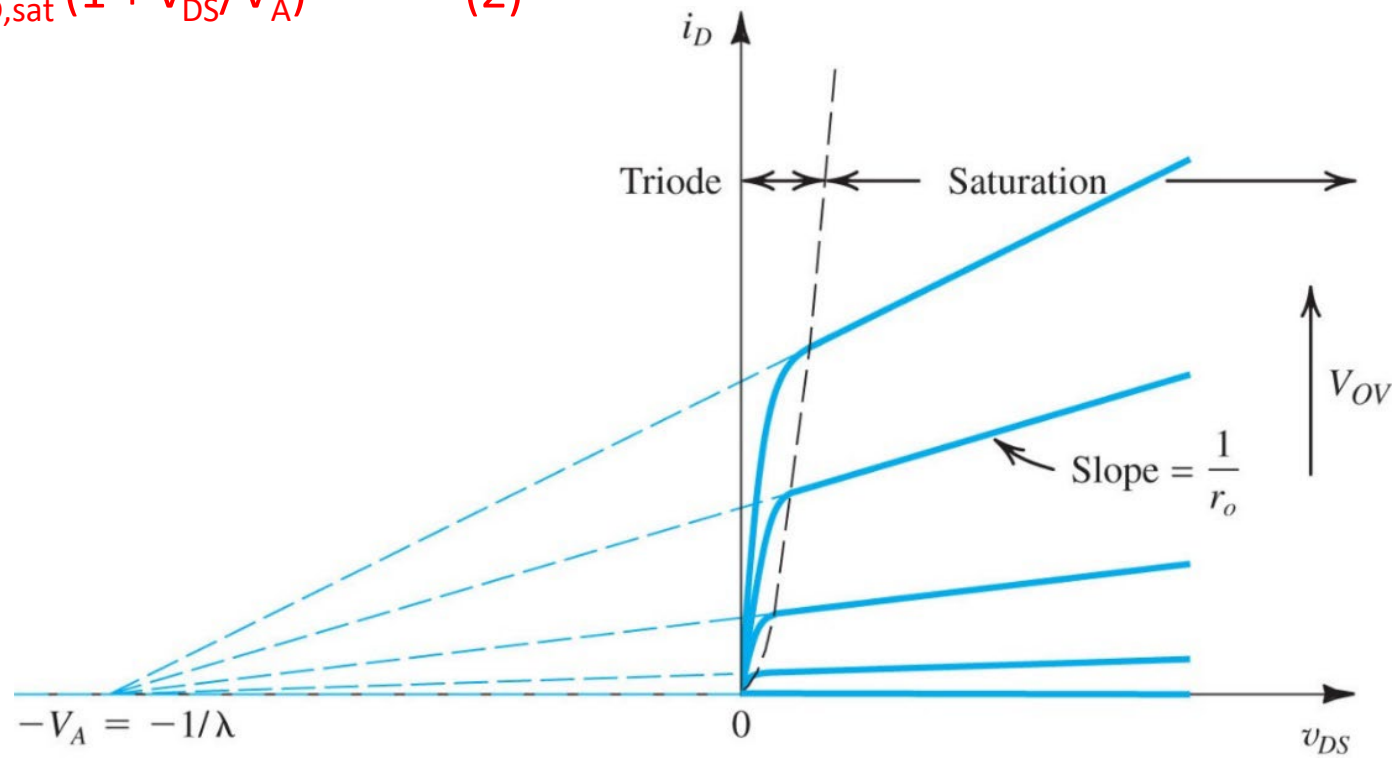

5.2.4. **Finite Output Resistance in Saturation**

- The inverse slope of the i_D vs v_{DS} curve in saturation is called the output resistance, r_o

$$r_o = [di_D/dv_{DS}]^{-1} = 1/\lambda i_{D,sat}$$

- So r_o decreases as $i_{D,sat}$ increases
- CAUTION
  DO NOT CONFUSE r_o WITH r_{ds} (recall r_{ds} is channel resistance in triode operation for small v_{DS})

Large-signal, equivalent-transistor model with r_o

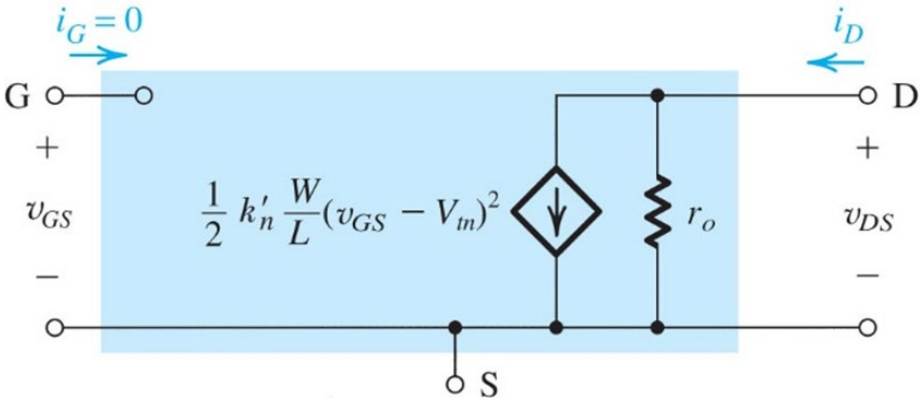

5.2.5. $i_D - v_{DS}$ Characteristics (enhancement model PMOS)

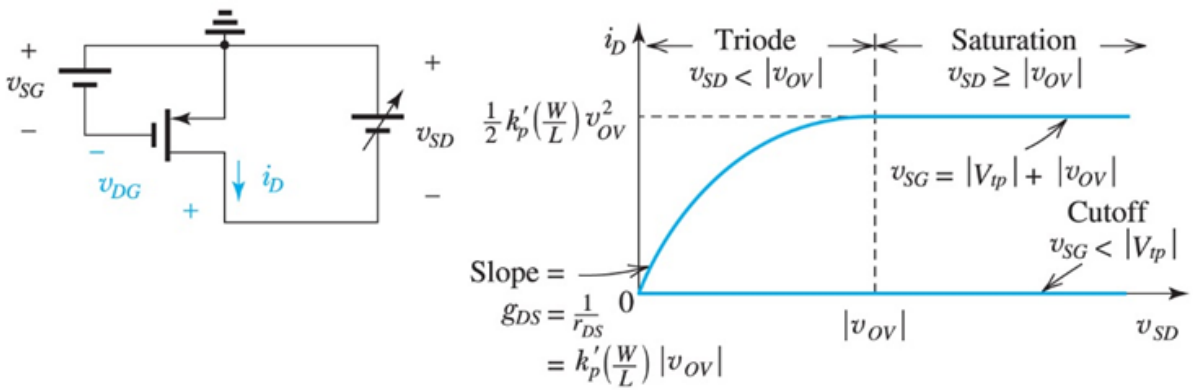

5.2.5. $i_D - v_{DS}$ Characteristics (enhancement model PMOS)

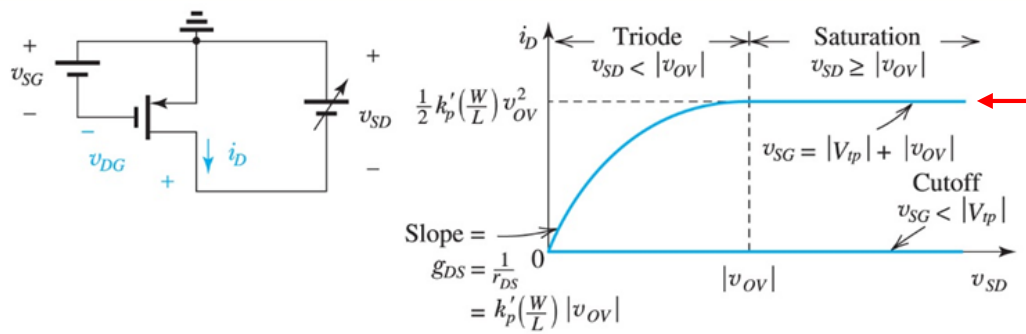

$i_{D,sat} = k_p'(W/L)(v_{SG} - |V_{tp}|)^2/2$

- $v_{SG} < |V_{tp}|$: no channel; transistor in cutoff; $i_D = 0$
- $v_{SG} = |V_{tp}| + |v_{OV}|$: a channel is induced; transistor operates in the triode region or in the saturation region depending on whether the channel is continuous or pinched off at the drain end;

Triode Region

Continuous channel, obtained by:

$$v_{DG} > |V_{tp}|$$

or equivalently

$$v_{SD} < |v_{OV}|$$

Then

$$i_D = k_p'\left(\frac{W}{L}\right)\left[(v_{SG} - |V_{tp}|)v_{SD} - \frac{1}{2}v_{SD}^2\right]$$

or equivalently

$$i_D = k_p'\left(\frac{W}{L}\right)\left(|v_{OV}| - \frac{1}{2}v_{SD}\right)v_{SD}$$

Saturation Region

Pinched-off channel, obtained by:

$$v_{DG} \leq |V_{tp}|$$

or equivalently

$$v_{SD} \geq |v_{OV}|$$

Then

$$i_D = \frac{1}{2}k_p'\left(\frac{W}{L}\right)(v_{SG} - |V_{tp}|)^2$$

or equivalently

$$i_D = \frac{1}{2}k_p'\left(\frac{W}{L}\right)v_{OV}^2$$

- If channel length modulation is included

$\lambda < 0\ V^{-1}$

and

$i_D = i_{D,sat}(1 - \lambda v_{SD})$