Exercise 5.6

a. An NMOS transistor has u_nC_{OX} = 200 μA/V² and V_A' = 50V/μm. If L = 0.8 μm and W = 16 μm, find V_A and λ.

k_n'

$V_A = V_A' L = \frac{50V}{\mu m} \cdot 0.8\,\mu m = 40V$ $\quad \lambda = \frac{1}{V_A} = \frac{1}{40} = 0.025\,V^{-1}$

b. Find the value of i_D when V_{OV} = 0.5V and v_{DS} = 1V and r_o at this operating point

$i_D = i_{Dsat}\left(1 + \frac{V_{DS}}{V_A}\right) = \frac{k_n'}{2}\left(\frac{W}{L}\right)V_{OV}^2\left(1 + \frac{V_{DS}}{V_A}\right)$

$= \underbrace{\frac{200\,\mu A/V^2}{2}\left(\frac{16}{0.8}\right)(0.5V)^2}_{500\,\mu A}\left(1 + \frac{1}{40}\right) = 512.5\,\mu A$

~13 μA due CLM

$r_o = \frac{1}{\lambda i_{Dsat}} = \frac{V_A}{i_{Dsat}} = \frac{40V}{500\,\mu A} = 80\,k\Omega$

c. If v_{DS} is increased by 2V, what is the corresponding increase in i_D?

$\frac{\Delta i_D}{\Delta V_{DS}} = \frac{1}{r_o} \rightarrow \Delta i_D = \frac{\Delta V_{DS}}{r_o} = \frac{2V}{80\,k\Omega} = 25\,\mu A$

Exercise 5.7

A PMOS transistor has $k_p' = 60\ \mu A/V^2$ and $V_{tp} = -1V$ and $W/L = 10$.

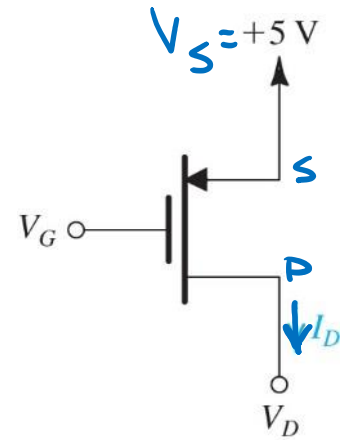

a. Find the range of V_G for which the transistor conducts.

$V_{SG} > |V_{tp}|$

$V_S - V_G > |V_{tp}|$

$V_S - |V_{tp}| > V_G$

$5 - 1 = 4 > V_G$

Exercise 5.7

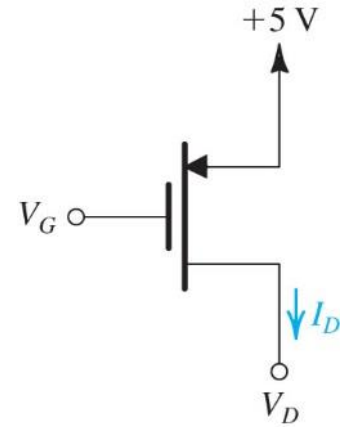

A PMOS transistor has $k_p' = 60\ \mu A/V^2$ and $V_{tp} = -1V$ and $W/L = 10$.

b. If $\lambda = 0\ V^{-1}$, find the $|V_{OV}|$ and V_G, and the range of v_D to operate the transistor in saturation with $i_D = 75\ \mu A$

$$i_{Dsat} = \frac{k_p'}{2}\left(\frac{W}{L}\right)|V_{OV}|^2$$

$$\rightarrow |V_{OV}| = \sqrt{\frac{2 i_D}{k_p'(W/L)}} = \sqrt{\frac{2 \cdot 75\ \mu A}{60 \cdot 10}}$$

$$|V_{OV}| = \sqrt{\frac{1}{4}} = 0.5$$

$$|V_{OV}| = V_{SG} - |V_{tp}|$$

$$|V_{OV}| = V_S - V_G - |V_{tp}| \qquad V_G = V_S - |V_{tp}| - |V_{OV}|$$

$$5 - 1 - .5 = 3.5\ V = V_G$$

Saturation

$$V_{SD} \geq |V_{OV}|$$

$$V_S - V_D \geq |V_{OV}|$$

$$V_S - |V_{OV}| \geq V_D$$

$$5 - 0.5 \geq V_D$$

$$4.5 \geq V_D$$

$$V_{Dmax} = 4.5$$

Exercise 5.7

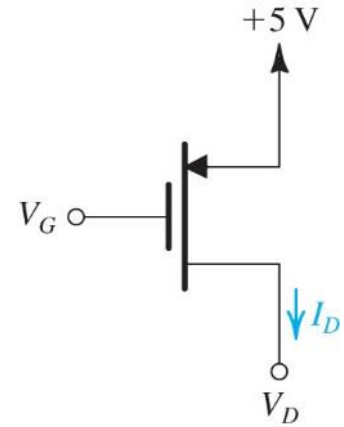

A PMOS transistor has $k_p' = 60\ \mu A/V^2$ and $V_{tp} = -1V$ and $W/L = 10$.

c. If $\lambda = 0.02\ V^{-1}$, find the value of r_o corresponding to the V_{OV} in (b) above.

$$r_o = \frac{1}{\lambda i_{Dsat}} = \frac{1}{0.02\ V^{-1}\ (75\mu A)}$$

$$= 667\ k\Omega$$

$$V_A = \frac{1}{\lambda} = -50V$$

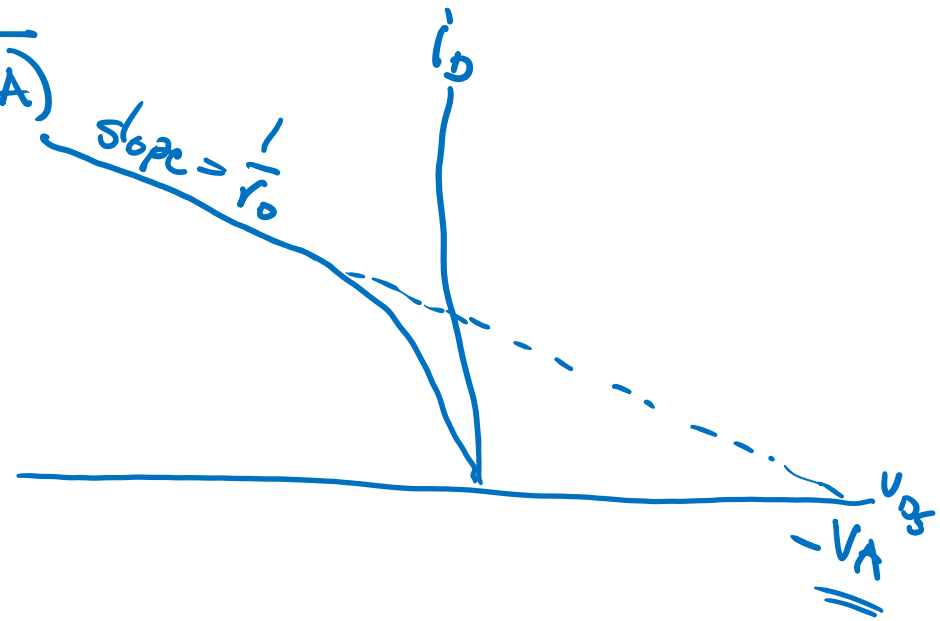

Problem 5.43a

Assume λ is negligibly small. If the transistor is in saturation and $|v_{GS}| = 1V$, find V_1. If $V_t = 0.5V$ and $I = 0.1$ mA, how large a resistor can be inserted in series with the drain while maintaining saturation.

Diode connected

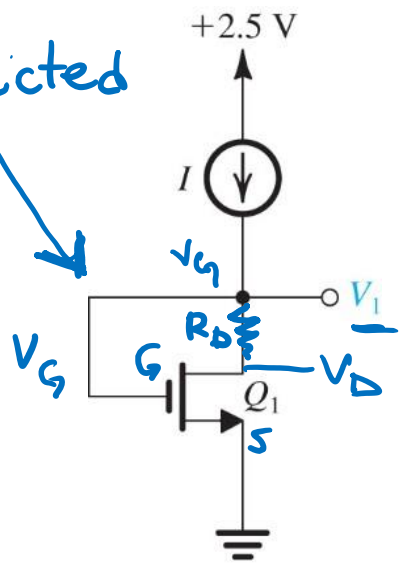

(a)

$V_1 = V_G$

$V_{GS} = 1$

$V_G = 1$

saturation

$V_{DS} \geq V_{OV}$

$V_{DS} \geq V_{GS} - V_t$

$V_D \geq V_G - V_t$

$V_D = \cancel{V_G} - IR_D \geq \cancel{V_G} - V_t$

$V_t \geq IR_D$

$\frac{0.5}{0.1mA} = 5K \geq R_D$

$R_{Dmax} = 5K\Omega$

Problem 5.43b

Assume λ is negligibly small. If the transistor is in saturation and $|v_{GS}| = 1V$, find V_2. If $V_t = 0.5V$ and $I = 0.1$ mA, how large a resistor can be inserted in series with the drain while maintaining saturation.

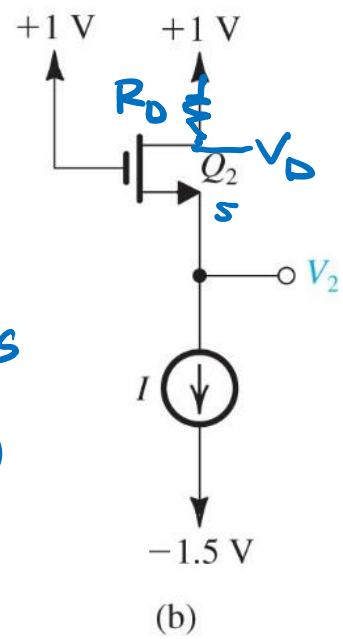

(b)

$V_G = 1 \quad V_2 = V_S$

$V_{GS} = 1 = \overset{=1}{V_G} - V_S$

$V_S = V_2 = 0$

$V_{DS} \geq V_{OV}$

$V_D - \cancel{V_S} > V_G - \cancel{V_S} - V_t$

$V_D \geq V_G - V_t$

$V_D = 1 - IR_D \geq V_G - V_t$

$1 - 0.5$

0.5

$\frac{1 - 0.5}{0.1mA} \geq \cancel{I} R_D$

$\frac{0.5}{.1mA} = 5K \geq R_D$

Problem 5.43c

Assume λ is negligibly small. If the transistor is in saturation and $|v_{GS}| = 1V$, find V_3. If $|V_t| = 0.5V$ and $I = 0.1$ mA, how large a resistor can be inserted in series with the drain while maintaining saturation.

$V_3 = V_{SG} = 1$

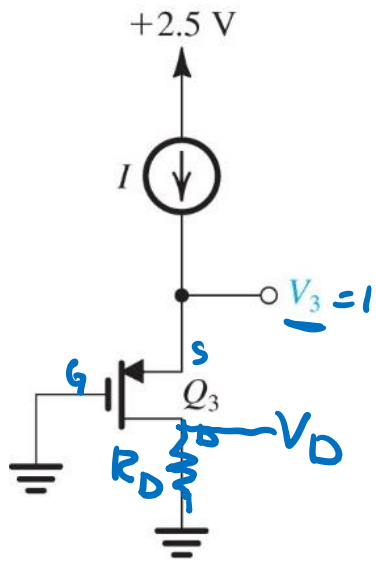

(c)

$V_{SD} \geq |V_{OV}|$

$V_{DS} \leq V_{OV}$

$V_{DS} \leq V_{GS} - V_{tp}$

$V_D - \cancel{V_S} \leq V_G - \cancel{V_S} - V_{tp}$

$V_D \leq \cancel{V_G} - V_{tp}$

$-(-.5)$

$V_D \leq 0.5$

$V_D = IR_D \leq 0.5$

$R_D \leq \frac{0.5}{0.1mA} = \underline{5k\Omega}$

Problem 5.43d

Assume λ is negligibly small. If the transistor is in saturation and $|v_{GS}| = 1V$, find V_4. If $|V_t| = 0.5V$ and $I = 0.1$ mA, how large a resistor can be inserted in series with the drain while maintaining saturation.

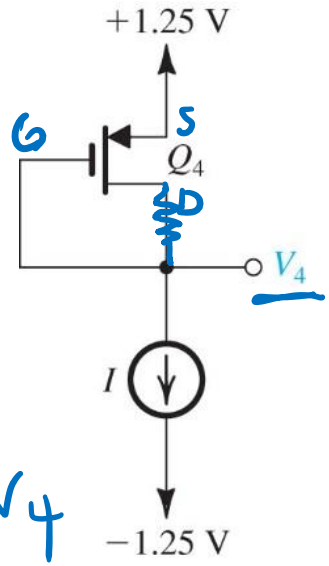

(d)

$V_{SG} = 1V = V_S - V_G$

$V_G = V_S - 1$

$= 1.25 - 1$

$V_G = 0.25V = V_4$

$V_{SD} \geq |V_{ov}|$

$V_{DS} \leq V_{ov}$

$V_{DS} \leq V_{GS} - V_{tp}$

$V_D - \cancel{V_S} \leq V_G - \cancel{V_S} - V_{tp}$

$V_D \leq V_G - V_{tp}$

$\leq 0.25 - (-0.5)$

$V_D \leq 0.75V$

$V_D = V_4 + IR_D \leq 0.75V$ -

$\cancel{I} R_D \leq \frac{0.5V}{0.1m} = 5k\Omega$