Unit #4
Chapter #8.1 & 8.2:
Integrated Circuit Biasing
Lecture 20

from **Microelectronic Circuits** Text
by Sedra and Smith
Oxford Publishing

8.1. **Analog CMOS IC Design**

- **Originally, most analog integrated circuits were designed with bipolar junction transistors (BJTs)**
- **You have probably seen in our textbook that several chapters and sections are devoted to BJT designs, which are still used today**
- **However, most analog integrated circuits are designed in CMOS technologies, which is why we specifically study CMOS ICs in this class**
- **The use of MOSFETS in the design of analog circuits is primarily motivated by the need to be compatible with digital circuits, which are almost always made in CMOS technologies, not bipolar**

8.1. Major Features of CMOS IC Design

- ***Integrated circuits***, **which are fabricated entirely on single chips, or die, impose several constraints on circuit design**

- **Some constraints**
  - **Capacitors –take a lot of chip area , so have to use direct coupling and clever capacitance amplification techniques**
  - **Resistors – even medium size resistors take a lot of chip area too … so we typically do not use them**

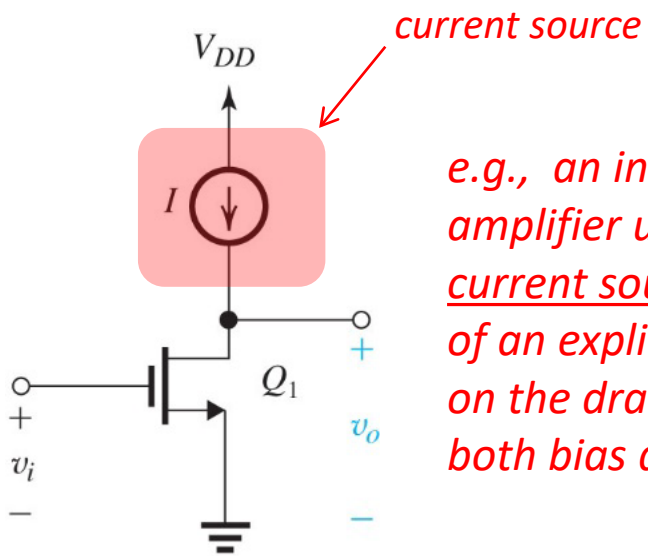

e.g., an integrated CS amplifier uses a current source instead of an explicit resistance on the drain to provide both bias and loading

In this lecture, we describe how current sources are realized in CMOS ICs

8.2.1. **Basic MOSFET Current Source**

- **The heart of the circuit is the "diode connected" transistor, Q1, operating in saturation**

$$I_{D1} = \frac{k_n'}{2}\left(\frac{W}{L}\right)_1 (V_{GS} - V_{tn})^2$$

- **An "off-chip" resistor allows us to set the reference current**

$$I_{REF} = I_{D1} = \frac{V_{DD} - V_{GS}}{R}$$

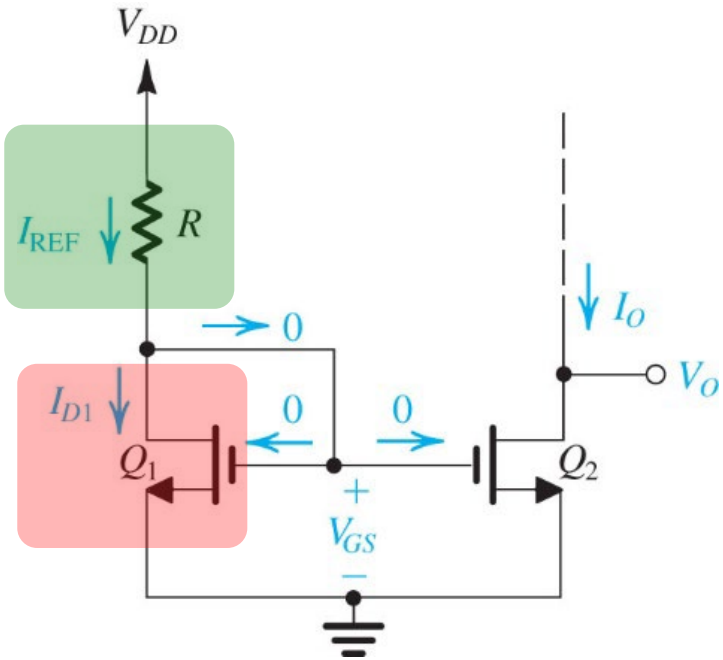

The combined effect of resistor and saturated transistor, Q_1, allows us to fix V_{GS}

8.2.1. **Basic MOSFET Current Source**

- **As long as transistor Q2 is in saturation, i.e.,**

$$V_O \geq V_{GS} - V_{tn}$$

the output current I_O will be

$$I_O = \frac{k_n'}{2}\left(\frac{W}{L}\right)_2 (V_{GS} - V_{tn})^2$$

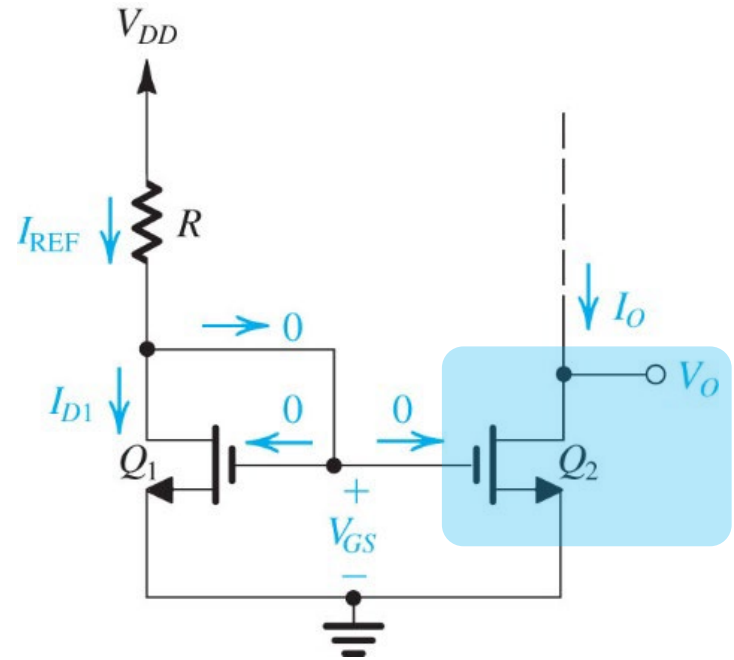

- **Now we can say**

$$\frac{k_n'}{2}(V_{GS} - V_{tn})^2 = \frac{I_O}{\left(\frac{W}{L}\right)_2} = \frac{I_{REF}}{\left(\frac{W}{L}\right)_1} \Rightarrow I_O = I_{REF}\frac{\left(\frac{W}{L}\right)_2}{\left(\frac{W}{L}\right)_1}$$

I_o is proportional (is a mirror of) I_{REF}

8.2.1. **Effect of V_O on I_O**

- **In the previous derivation, we neglected the effect of channel width modulation … <u>which can have a big effect</u>**

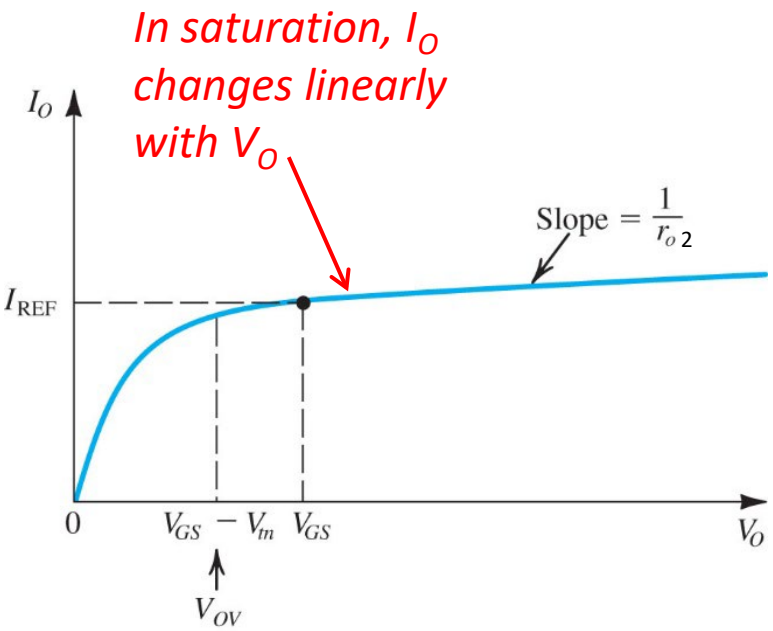

$$I_O = mx + b$$

where

$$m = \frac{1}{r_{o2}} = \frac{I_O\big|_{V_O = V_{GS}}}{V_A} = \frac{\left(\frac{W}{L}\right)_2}{\left(\frac{W}{L}\right)_1}\frac{I_{REF}}{V_A}$$

$$x = V_O - V_{GS} \qquad b = \frac{\left(\frac{W}{L}\right)_2}{\left(\frac{W}{L}\right)_1} I_{REF}$$

$$\boxed{I_O = \frac{\left(\frac{W}{L}\right)_2}{\left(\frac{W}{L}\right)_1} I_{REF}\left(1 + \frac{V_O - V_{GS}}{V_A}\right)}$$

8.2.2. **MOS Current-Steering Circuits**

- **Once a reference current has been generated, it can be replicated to provide DC bias throughout IC**

  This is called current steering

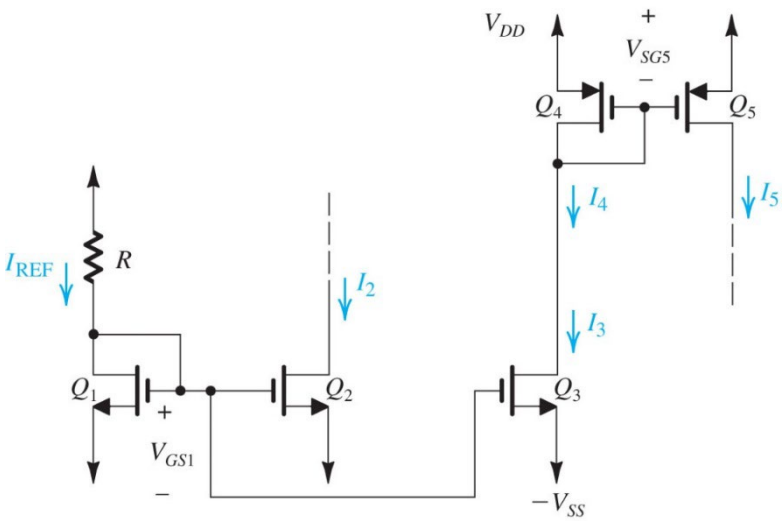

- **As long as all transistors are in saturation (THIS IS REQUIRED), the currents I_2 – I_5 will just be scaled replicas of I_{REF}**

$$I_2 \approx I_{REF}\frac{\left(\frac{W}{L}\right)_2}{\left(\frac{W}{L}\right)_1} \qquad I_3 \approx I_4 \approx I_{REF}\frac{\left(\frac{W}{L}\right)_3}{\left(\frac{W}{L}\right)_1} \qquad I_5 \approx I_4\frac{\left(\frac{W}{L}\right)_5}{\left(\frac{W}{L}\right)_4} \approx I_{REF}\frac{\left(\frac{W}{L}\right)_3}{\left(\frac{W}{L}\right)_1}\frac{\left(\frac{W}{L}\right)_5}{\left(\frac{W}{L}\right)_4}$$

8.2.2. **Current "Sourcing" and "Sinking"**

- **Transistor Q2 is "sinking" current from circuit 1**
- **Transistor Q5 is "sourcing" current to circuit 2**
- **To maintain saturation the minimum voltage drop across all mirror transistors (Q2, Q3, Q5) must be**

$$V_{CS\min} = V_{OV}$$

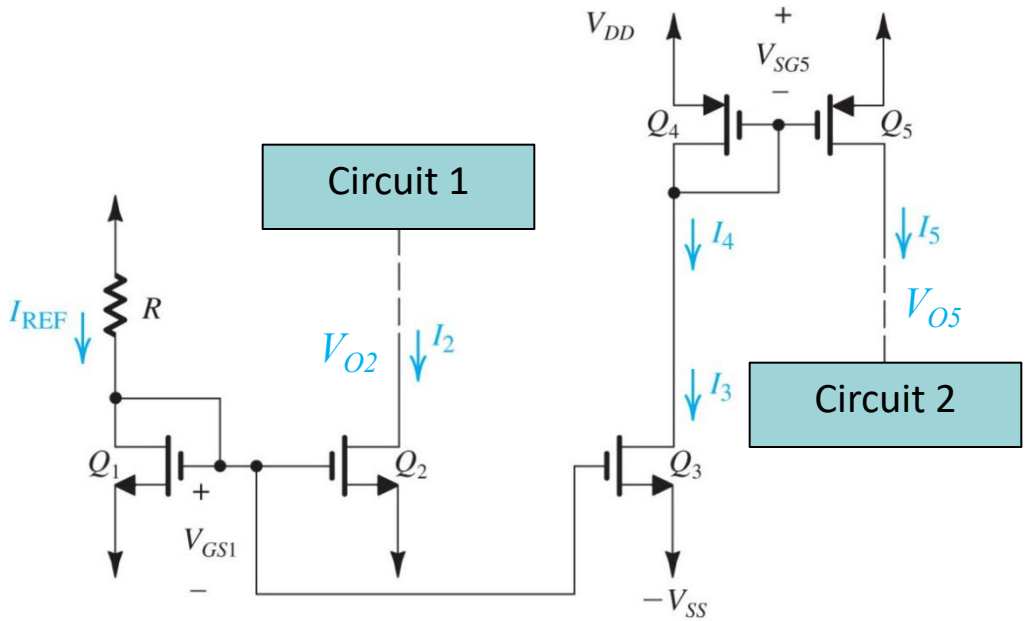

$Vov_2 = V_{GS2}-V_t$

$$V_{O2} \geq -V_{SS} + V_{CS\min}$$

and

$|Vov_5| = V_{SG5}- |V_t|$

$$V_{O5} \leq V_{DD} - V_{CS\min}$$

8.2.4. **Small Signal Operation**

- **Current mirrors are sometimes used as current amplifiers in small signal operation**

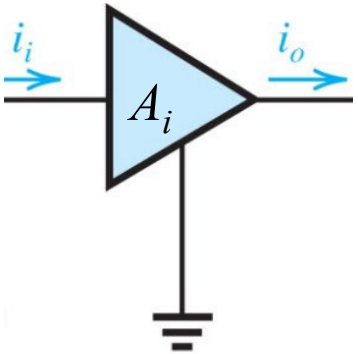

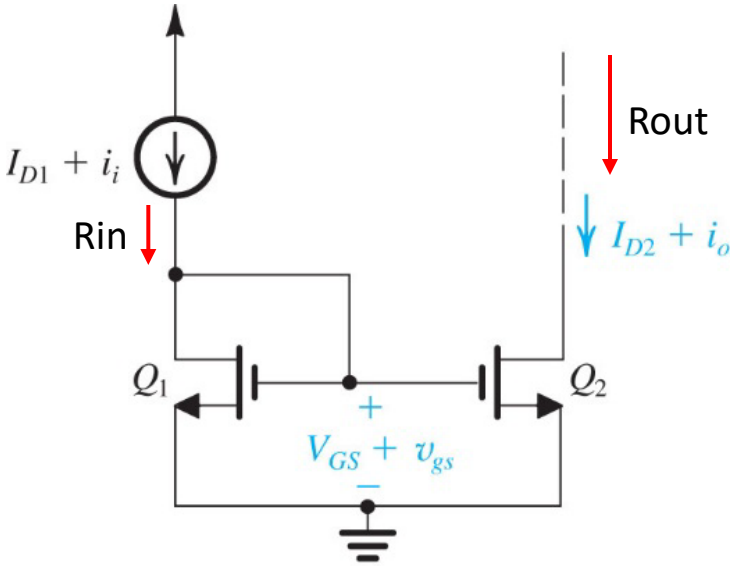

$$A_{i0} \equiv \left.\frac{i_o}{i_i}\right|_{ac\ output\ shorted}$$

8.2.4. **Current Amplifier Parameters**

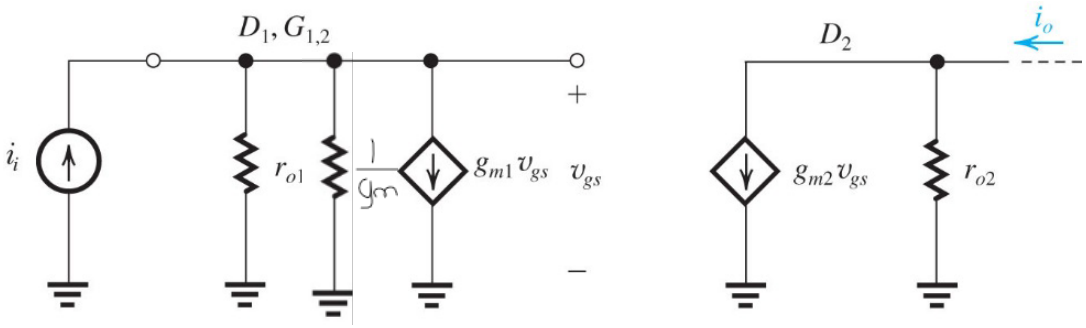

- $R_{in} = r_{o1} \| \frac{1}{g_{m1}} \approx \frac{1}{g_{m1}}$

- $R_o = r_{o_2}$

Correction Factor

- $A_{i0} = \left.\frac{i_o}{i_i}\right|_{v_{d2}=0} = \frac{g_{m2}v_{gs}}{i_i} \approx \frac{g_{m2}(i_i/g_{m1})}{i_i} = \frac{g_{m2}}{g_{m1}} = \frac{(W/L)_2}{(W/L)_1} \left[\frac{1}{1+\frac{1}{g_{m1}r_{o1}}}\right]$