Unit #4
Chapter #8.3: The Basic Gain Cell
Lecture 21

from **Microelectronic Circuits** Text
by Sedra and Smith
Oxford Publishing

8.3.1 CS Amplifiers with Ideal Current Source Loads

- **As mentioned in Lecture 20, integrated circuit amplifiers, like common source, use current sources instead of drain resistors**

Discrete CS amp with drain resistor

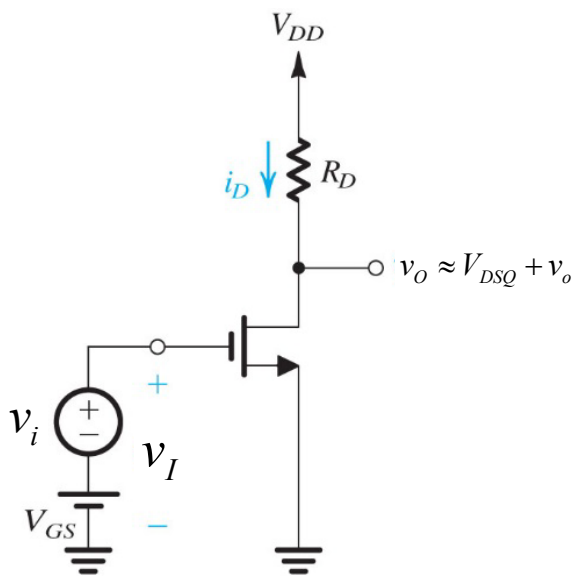

Integrated CS amp with current source

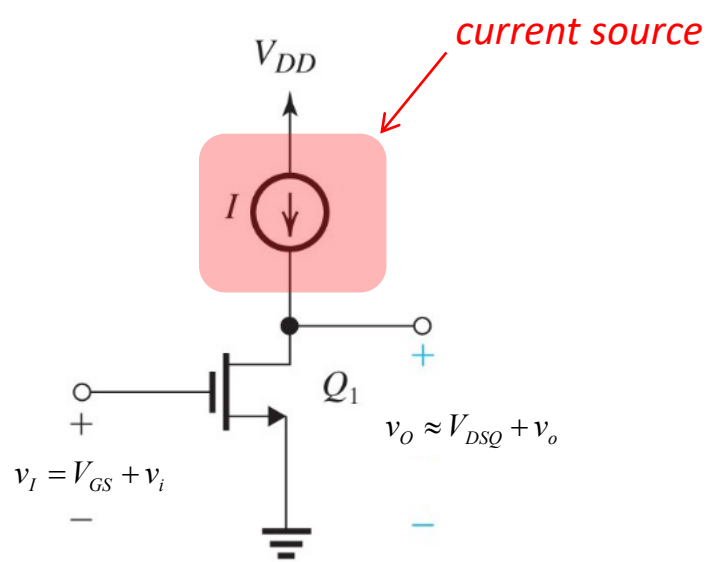

8.3.1 CS Amplifiers with Ideal Current Source Loads

- **As mentioned in Lecture 20, integrated circuit amplifiers, like common source, use current sources instead of drain resistors**

Integrated CS amp with current source

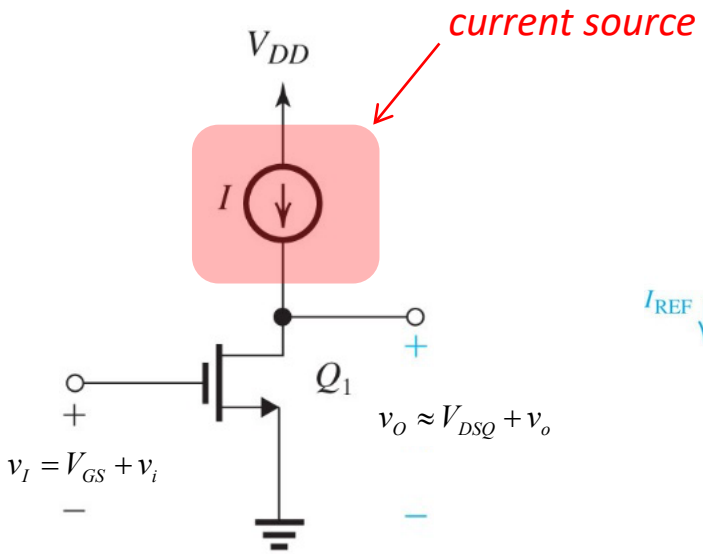

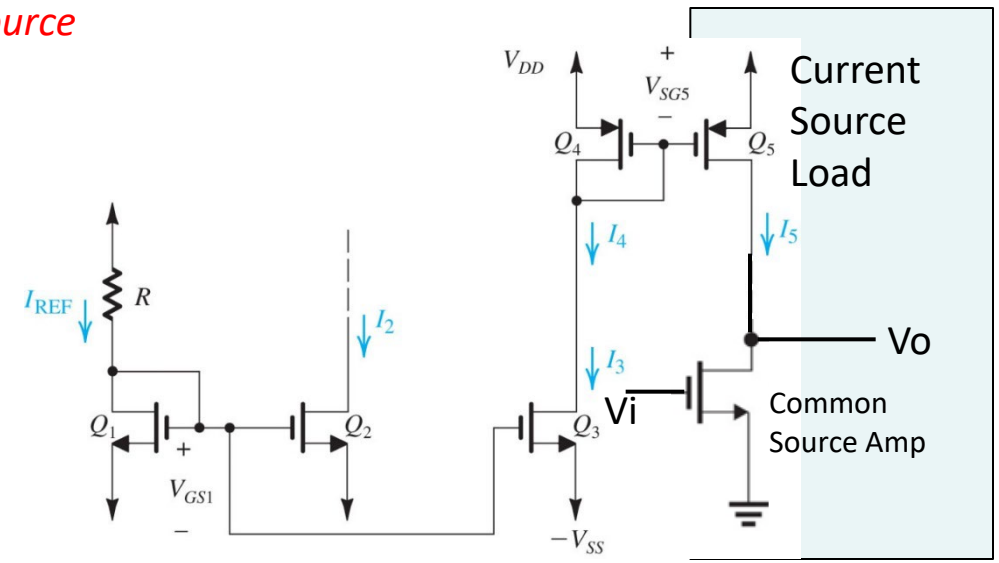

8.3.1 CS DC (operating point)

- **Special consideration**
  - **For this configuration, the DC gate-source voltage, V_{GS}, MUST be selected to match the current *I*.**

$$I = \frac{1}{2}k_n'\frac{W}{L}(V_{GS}-V_t)^2\left(1+\frac{V_{DSQ}-V_{OV}}{V_A'L}\right)$$

$$\approx \frac{1}{2}k_n'\frac{W}{L}(V_{GS}-V_t)^2$$

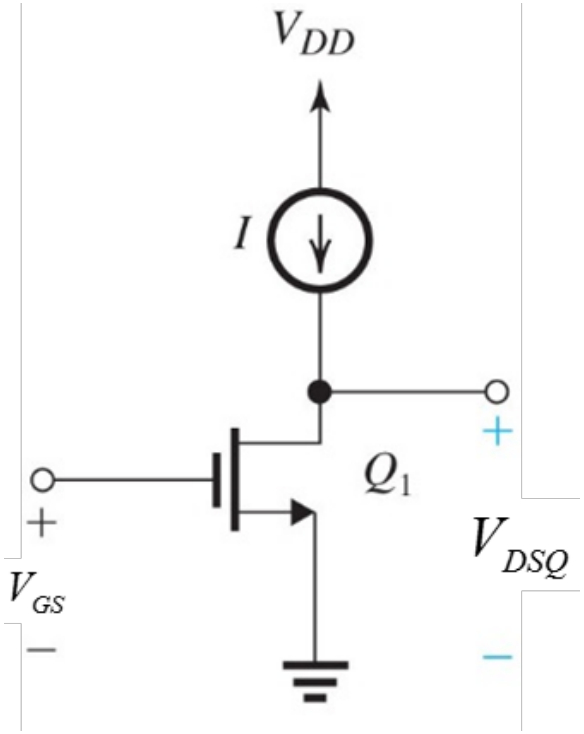

Use this to omit channel length modulation, which we typically do in DC

8.3.1 CS Small Signal Equivalent Circuit

- **If the current source is ideal, it output (Norton) resistance, R_O, is infinite**

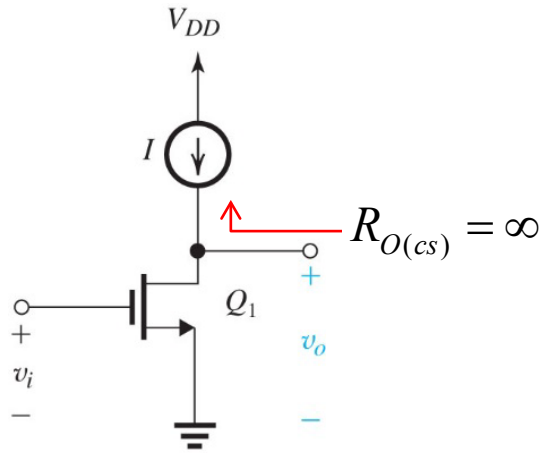

- **The SS equivalent circuit can therefore be drawn as**

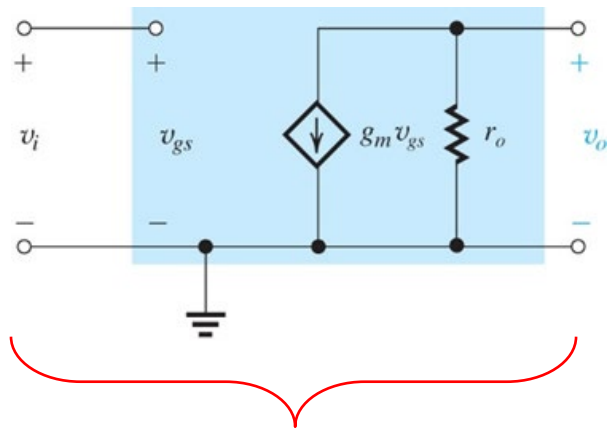

$$g_m = \sqrt{2k_n' \frac{W}{L} I}$$

$$r_o = \frac{1}{\lambda I} = \frac{V_A}{I}$$

This is the Basic Gain Cell

8.3.2 **Key Intrinsic Features**

- **Recall the three key characteristics to consider for amplifier**

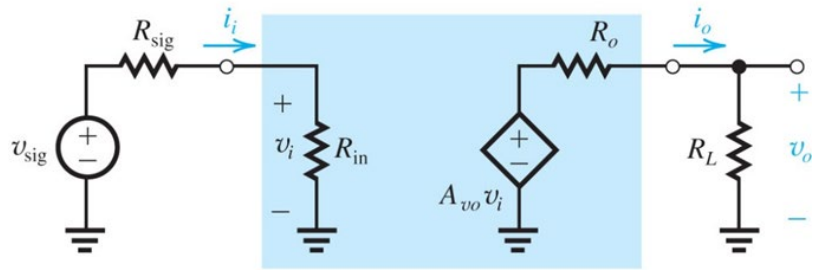

- **So for the Basic Gain Cell**

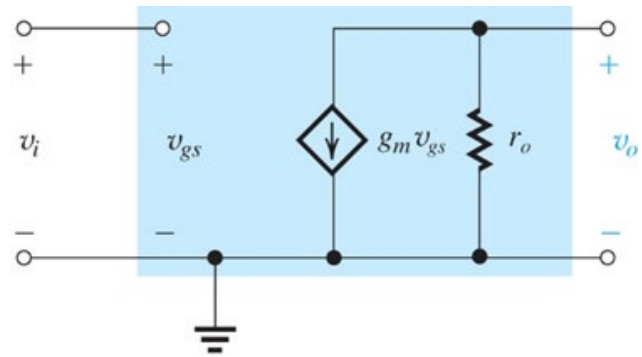

  - **Input Resistance -** $R_{in} = \infty$
  - **Output Resistance -** $R_o = r_o$

$$g_m = \sqrt{2k_n' \frac{W}{L} I} = \frac{2I}{Vov}$$

$$r_o = \frac{1}{\lambda I} = \frac{V_A}{I}$$

  - **Intrinsic Gain -** $A_{vo} = -g_m r_o = V_A \sqrt{\frac{2k_n' \frac{W}{L}}{I}} = \frac{2V_A}{V_{OV}}$

8.3.3 Effect of Current Source Output Resistance

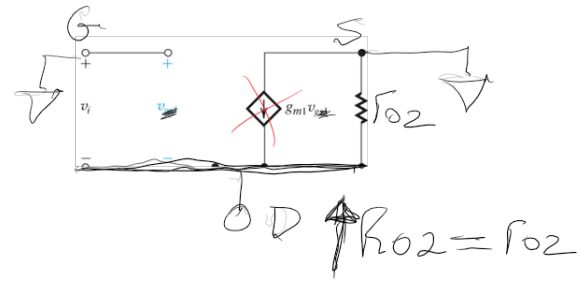

- **The current source can be implemented with PMOS biased in saturation**

$$I = \frac{1}{2} k_p' \left(\frac{W}{L}\right)_2 \left[V_{DD} - V_G - |V_{tp}|\right]^2$$

$$r_{o2} = \frac{|V_{A2}|}{I}$$

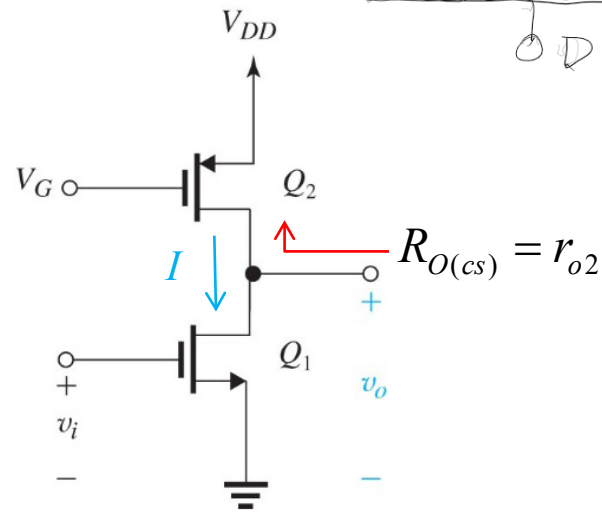

- **Equivalent circuit …**

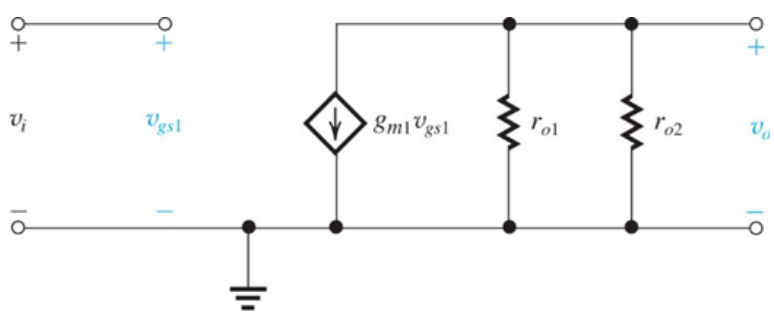

…and gain

$$A_{v0} = -g_{m1}\left(r_{o1} \parallel r_{o2}\right)$$

$$= -\frac{g_m r_o}{2} \quad if\ V_{A1} = |V_{A2}|$$

8.3.4 Increasing the Gain

- **How can we increase the gain of the basic cell?**

Answer: Increase the output resistance of the cell

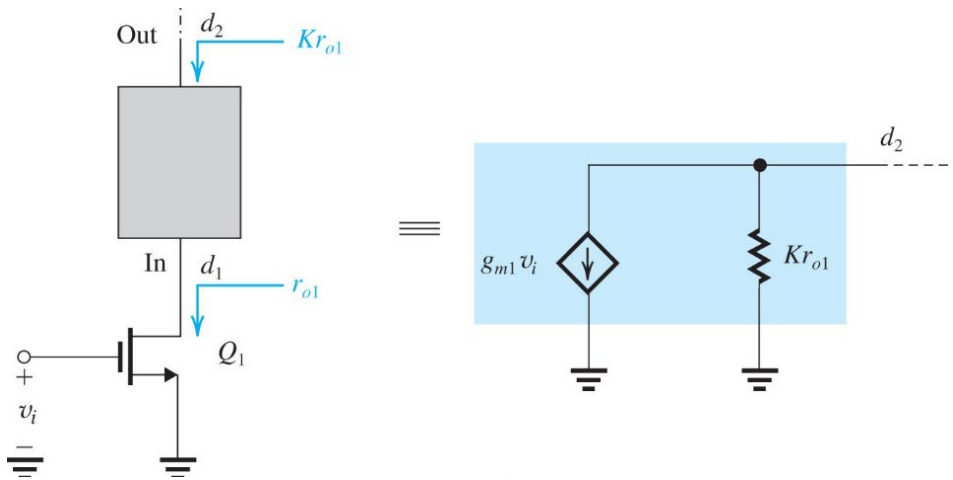

$$A_{v0} = -Kg_{m1}r_{o1}$$

The "box" takes output current of Q_1 (d_1) and passes it to the cell output at d_2, which has a higher output resistance …

we can do this with a current buffer (Lecture 22)