Unit #4
Chapter #7.3.6, 8.3 & 8.4:
Buffers: CG and SF Amplifier
Lecture 22

from **Microelectronic Circuits** Text
by Sedra and Smith
Oxford Publishing

7.3.6 Need for Voltage Buffers

- **Consider a 1V voltage source, v_{sig}, with 1MΩ internal resistance, R_{sig}, driving a 1kΩ load, R_L**

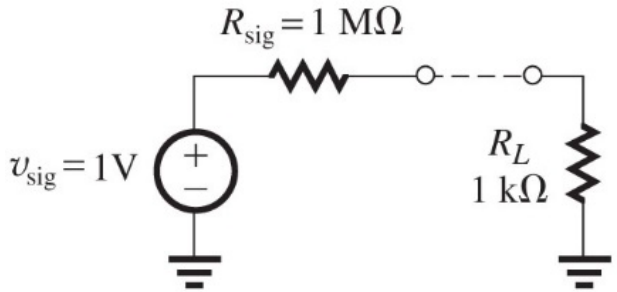

We want ~1V across R_L

- **This will NOT happen if we connect the source directly to the load**

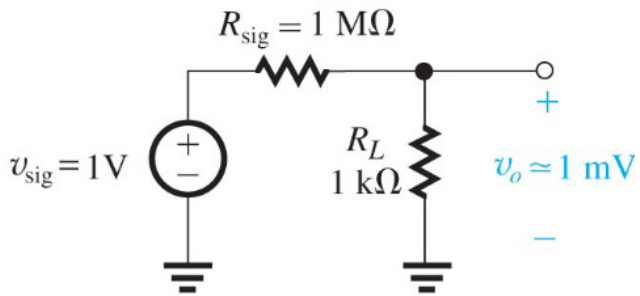

What do we do? ***Put a voltage buffer in between the source and the load***

7.3.6 **Voltage Buffer**

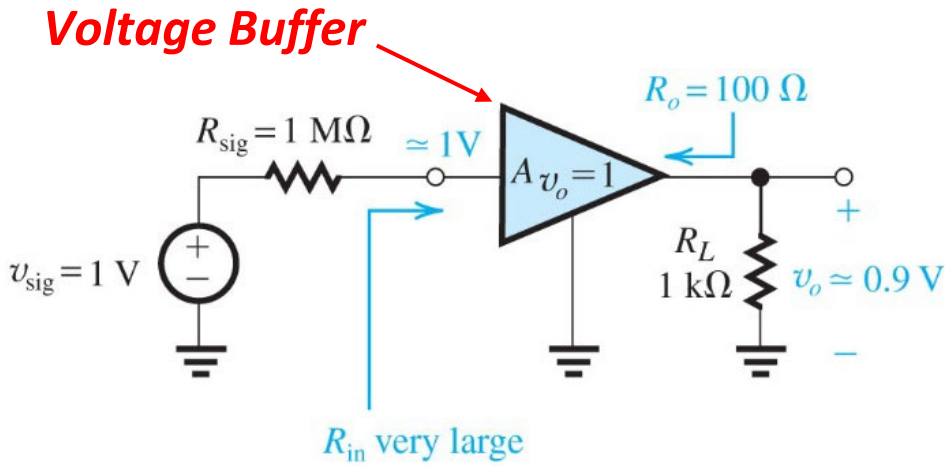

- **Input Resistance -** R_{in} *VERY LARGE*
- **Open Circuit Voltage Gain -** $A_{vo} \approx 1V/V$
- **Output Resistance -** R_o *small*

What circuit will do this for us?

7.3.6 RECALL the Source Follower (neglecting r_o)

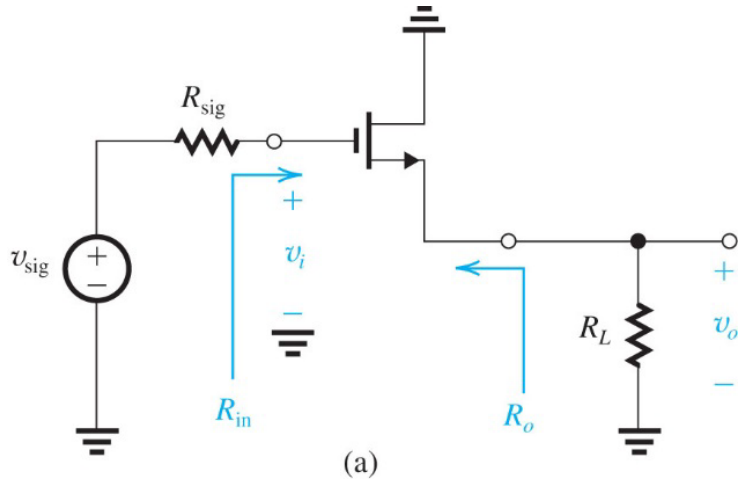

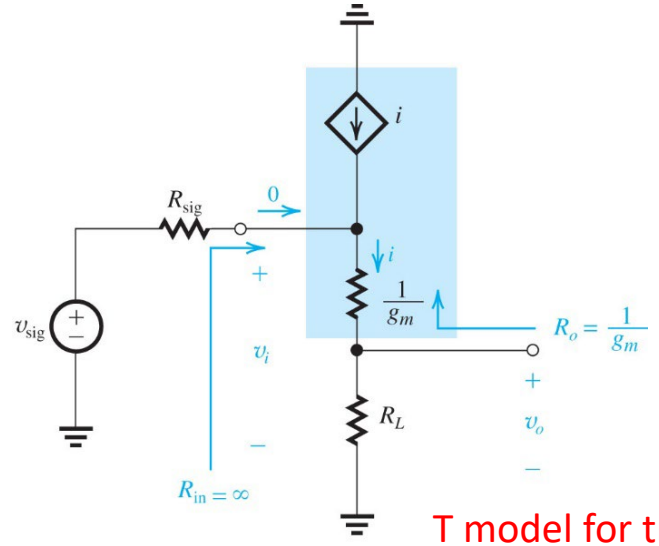

T model for transistor

- **Input Resistance -** $R_{in} = \infty$

- **Open Circuit Voltage Gain -** $A_{vo} = \dfrac{R_L}{R_L + \dfrac{1}{g_m}} = 1V/V \;\; if \;\; R_L = \infty$

- **Output Resistance -** $R_o = \dfrac{1}{g_m} \;\; which\ is\ pretty\ small$

8.3.4 Need for Current Buffers

- **We can increase gain of Basic Gain Cell by putting current buffer between Q1 drain and the output**

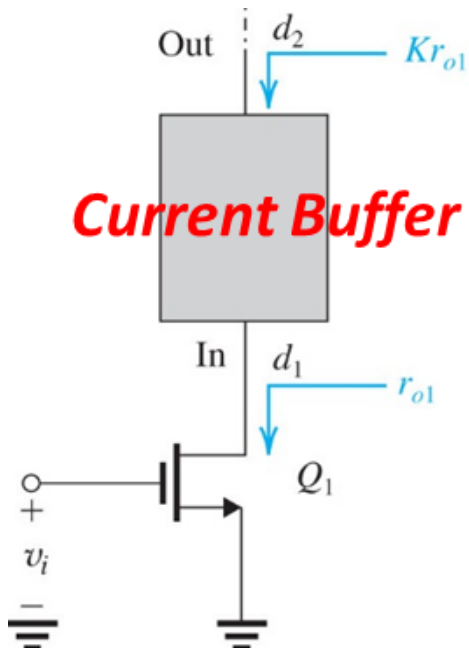

$$A_{v0} = -Kg_{m1}r_{o1}$$

8.3.4 Current Buffer

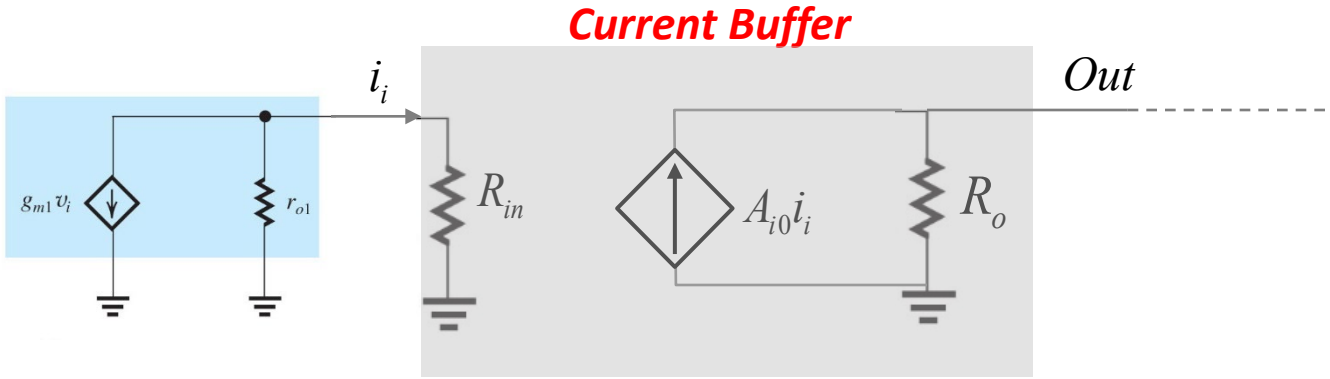

$$A_{v0} = \frac{A_{i0} i_i R_o}{v_i} = -g_{m1} A_{i0} R_o \frac{r_{o1}}{r_{o1} + R_{in}} \approx -g_{m1} R_o$$

- **Input Resistance -** R_{in} $small$
- **Short Circuit Current Gain -** $A_{io} \approx 1A/A$
- **Output Resistance -** R_o $LARGE$

What circuit will do this for us? ***A Common Gate amplifier***

8.4.1. **The Common Gate**

- **We can consider the input signal as either a Thevenin (like shown here) or a Norton (not shown)**

For the Common Gate the short circuit current gain, A_{io}, IS 1 A/A … which is what we want for the buffer

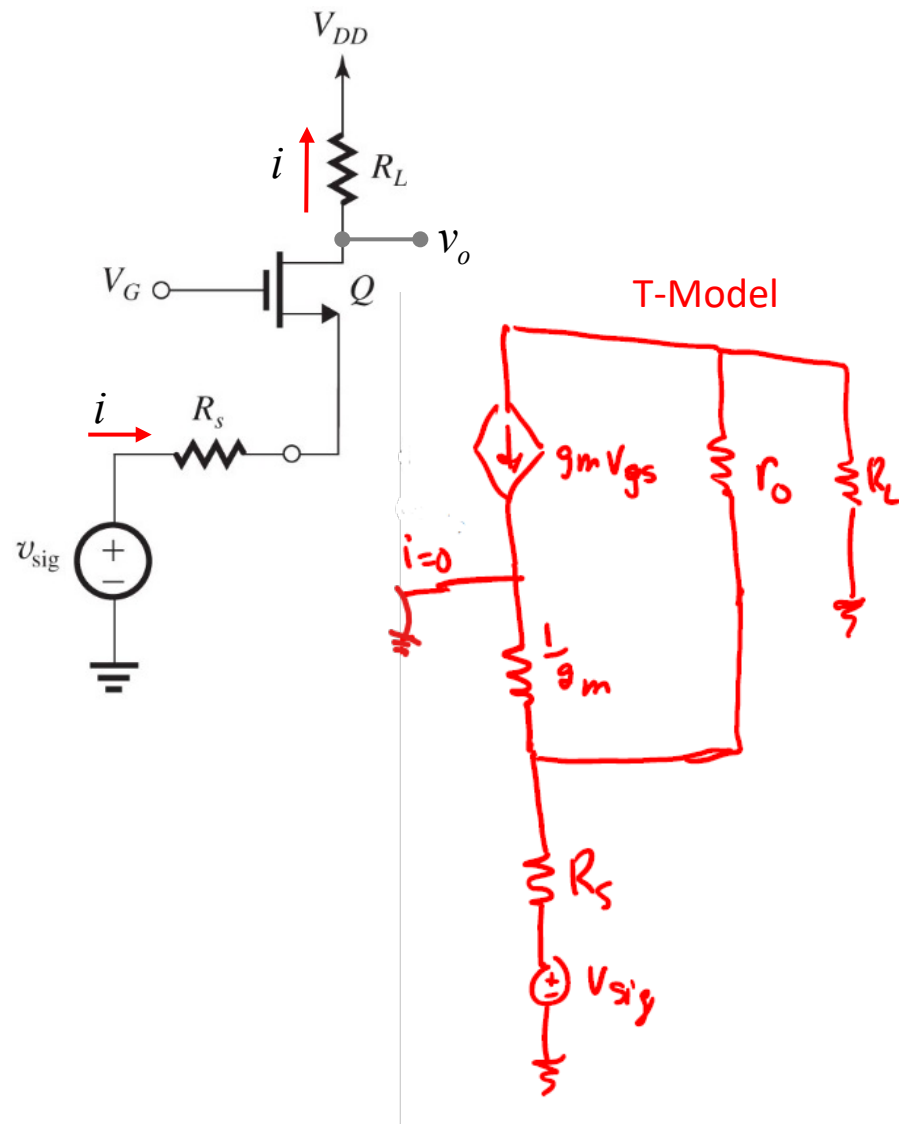

8.4.1 Common Gate Input Resistance (including r_o and R_L)

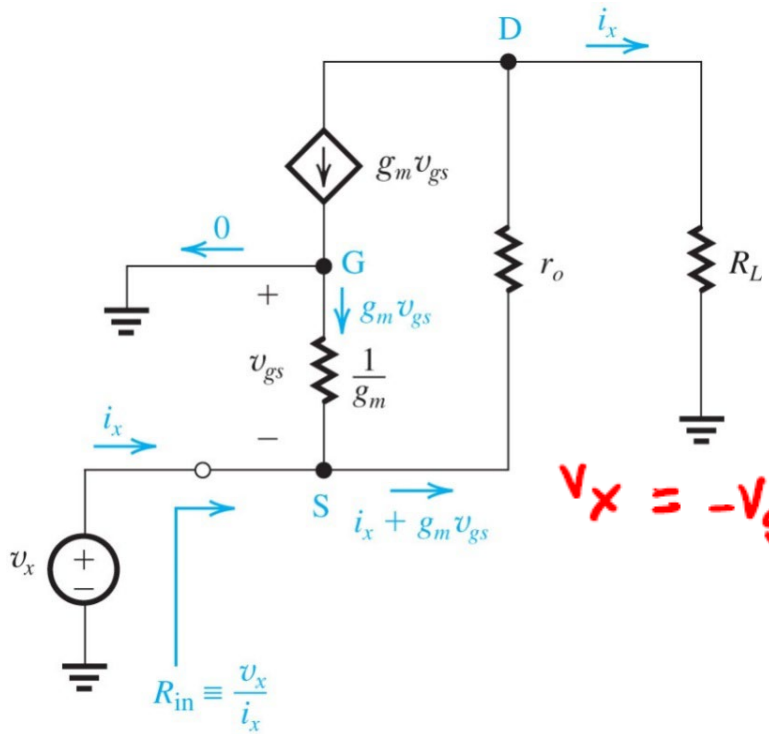

$$R_{in} \approx \frac{1}{g_m} + \frac{R_L}{g_m r_o}$$

$$R_{in} = \frac{v_x}{i_x}$$

Derivation

$$v_x = (i_x + g_m v_{gs}) r_o + i_x R_L$$

$$v_x = -v_{gs}$$

$$v_x = i_x r_o - g_m v_x r_o + i_x R_L$$

$$v_x (1 + g_m r_o) = i_x (r_o + R_L)$$

$$R_{in} = \frac{v_x}{i_x} = \frac{r_o + R_L}{1 + g_m r_o}$$

$$g_m r_o \gg 1$$

$$\cong \frac{1}{g_m} + \frac{R_L}{g_m r_o}$$

8.4.2 Common Gate Output Resistance (including r_o and R_S)

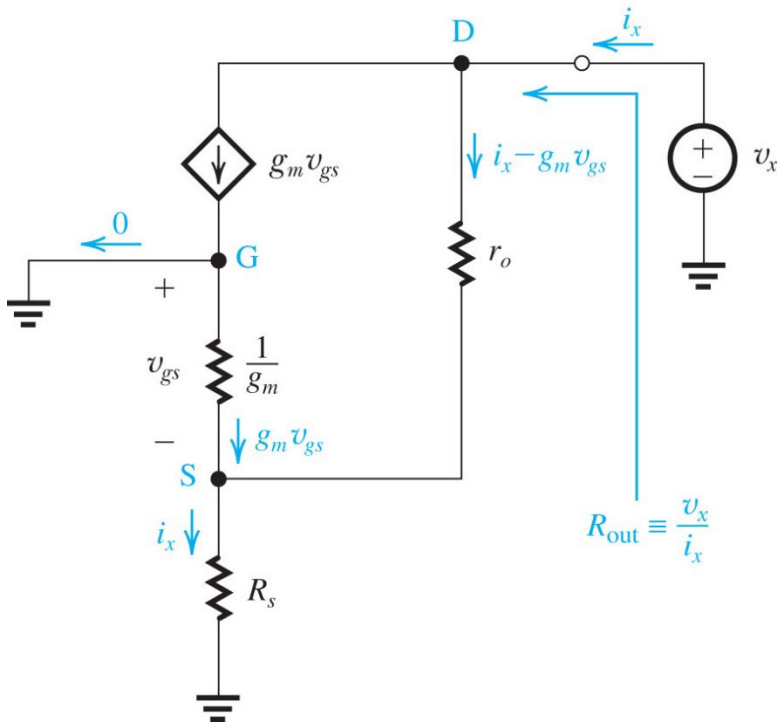

$$R_{out} \approx (g_m r_o) R_S$$

Derivation

$$V_x = (i_x - g_m V_{gs}) r_o + i_x R_s$$

$$V_{gs} = -i_x R_s$$

$$V_x = i_x R_s + i_x r_o - g_m V_{gs} r_o$$

$$= i_x R_s + i_x r_o + g_m i_x r_o R_s$$

$$R_{out} = \frac{V_x}{i_x} = R_s + r_o + g_m r_o R_s$$

$$= r_o + (1 + g_m r_o) R_s$$

$$g_m r_o \gg 1 \longrightarrow r_o + g_m r_o R_s$$

$$g_m R_s \gg 1 \longrightarrow (g_m r_o) R_s$$

8.4.3 The Body Effect

For the Common Gate

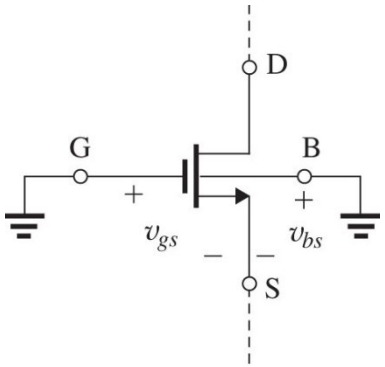

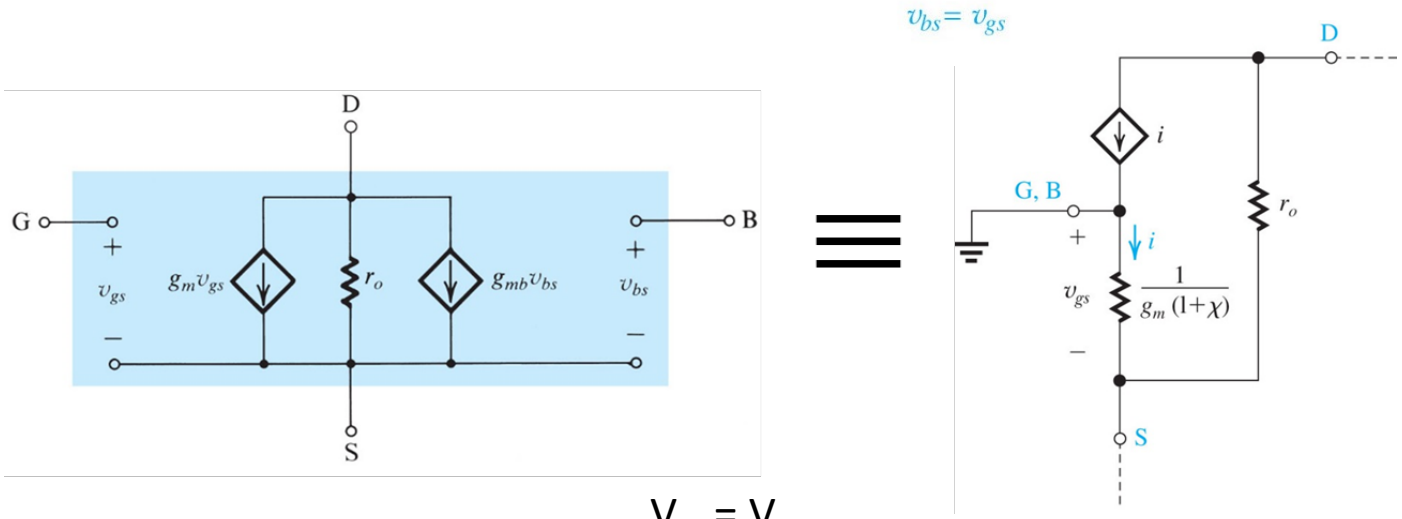

$V_{gs} = V_{bs}$

$$i = g_m v_{gs} + g_{mb} v_{bs}$$

$$= (g_m + g_{mb}) v_{gs} \quad \textit{since gate and body both grounded}$$

$$\boxed{= g_m (1+\chi) v_{gs}}$$

$g_m \rightarrow g_m(1+\chi)$

for common gate