Unit #5
Chapters #1 and #10: Frequency Response Single Stage IC Amplifiers

from **Microelectronic Circuits** Text
by Sedra and Smith
Oxford Publishing

Introduction

- **IN THIS UNIT YOU WILL LEARN ABOUT**
  - The amplitude and phase transfer functions (Bode plots) for single stage single input amplifiers.
  - The high-frequency model of the MOSFET.
  - High-frequency response of common source amplifiers.
  - High-frequency response of common gate amplifiers.
  - High-frequency response of source follower amplifiers.

Unit #5
Chapter #1.6: Frequency Response of Amplifiers
Lecture 23

from **Microelectronic Circuits** Text
by Sedra and Smith
Oxford Publishing

1.6.1. **Amplifier Frequency Response**

- **A frequency dependent input, v_i, into a voltage amplifier generates an output voltage, v_o, at the same frequency, ω.**

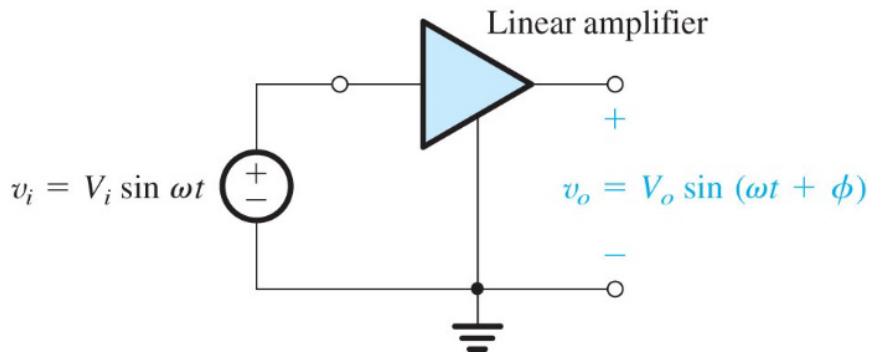

$$f = \frac{\omega}{2\pi} \ Hz$$

- **If the amplifier contains dynamic elements (capacitors of inductors) the voltage transfer function will be a function of frequency**

$$T(\omega) = A_v(\omega) = \frac{v_o(\omega)}{v_i(\omega)}$$

1.6.1. **Complex Transfer Function**

- **If the amplifier contains dynamic elements, i.e., capacitors or inductors, the transfer function is a complex vector**

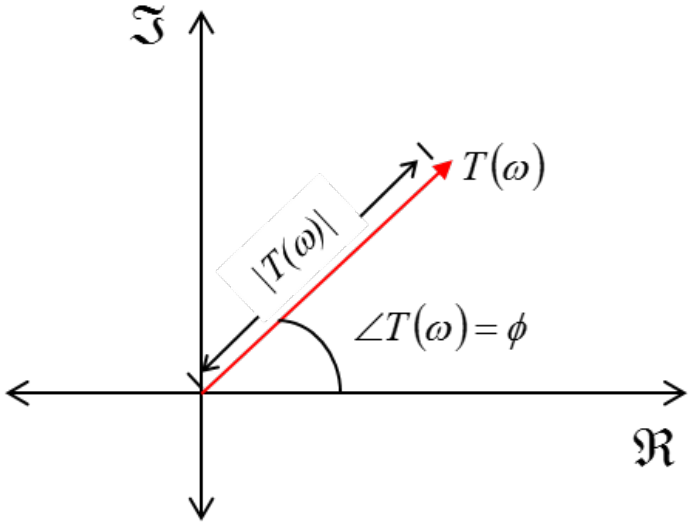

- **Euler's formula** $\cos(\phi) + j\sin(\phi) = \exp(j\phi)$

$$T(\omega) = |T(\omega)|(\cos(\phi) + j\sin(\phi))$$
$$= |T(\omega)|\exp(j\phi)$$

1.6.1. **Amplitude and Phase**

Capacitor: $Z_C = 1/jwC$

Inductor: $Z_L = jwL$

- **Complex frequency variable** $s = j\omega$

- **Amplitude (Magnitude) Transfer Function**

$$|T(s)| = |A_v(s)| = \frac{V_o(s)}{V_i(s)}$$

Magnitude and phase are functions of the complex frequency

- **Phase Transfer Function**

$$\angle T(s) = \angle A_v(s) = \phi(s)$$

1.6.2. **Amplifier Frequency Response**

- **Amplifier magnitude (gain) can be plotted vs. frequency in decibels (dB)**

$$T(\omega)_{dB} = 20\log|T(\omega)|$$

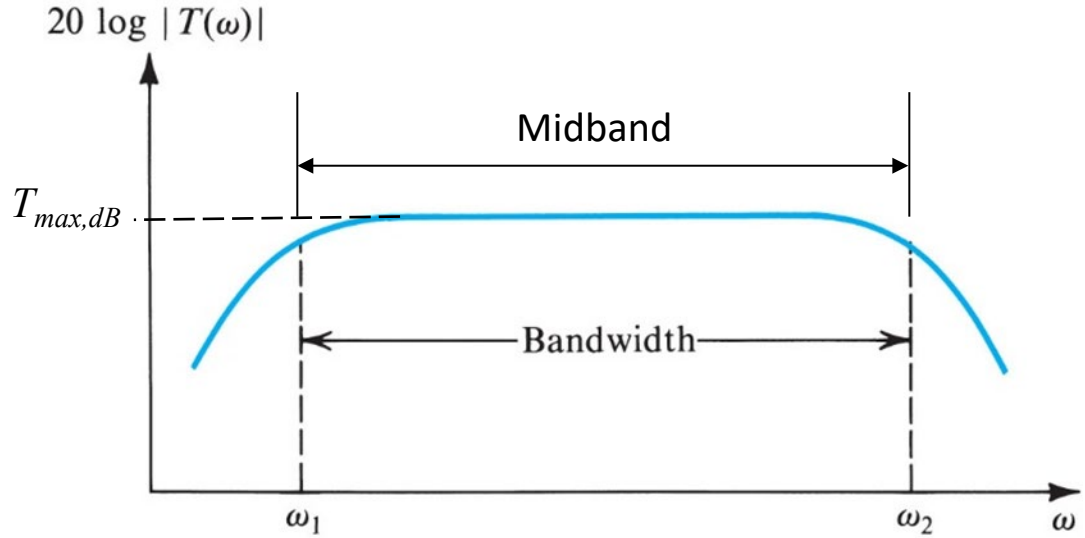

- **Typical amplifier response has a middle region between ω_1 and ω_2, which is almost constant … this is the maximum gain, $T_{max,dB}$**

1.6.2. **Amplifier Bandwidth**

- **Signals below ω_1 and above ω_2 experience lower gain**

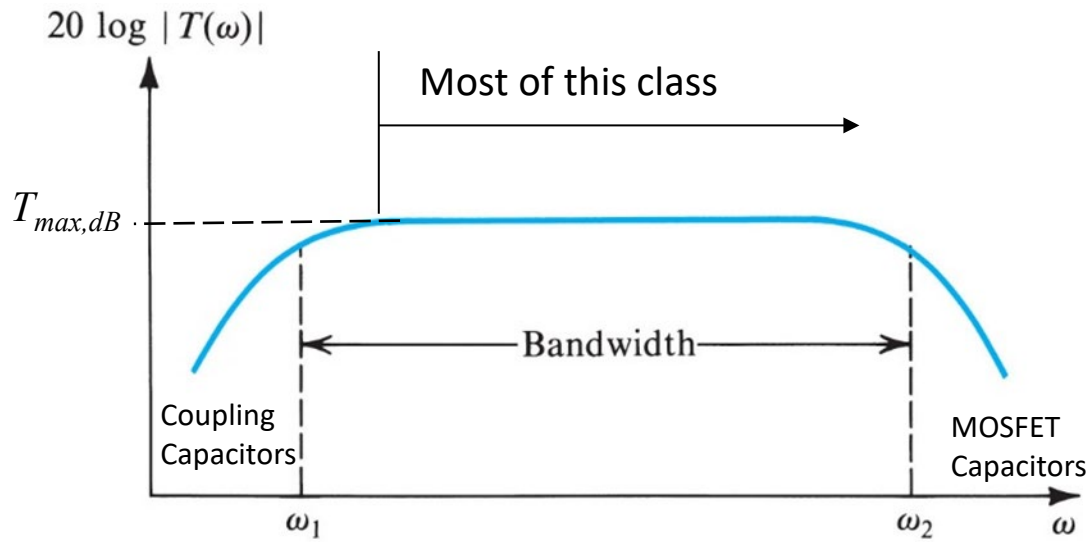

- **Amplifier Bandwidth**

$$\omega_2 - \omega_1 \approx \omega_2$$

We will normally neglect ω_1 in this class
.. but not always

- **Typically we define** $T(\omega_1)_{dB} = T(\omega_2)_{dB} = T_{\max,dB} - 3dB$

1.6.4. **Single Time Constant (STC) Networks**

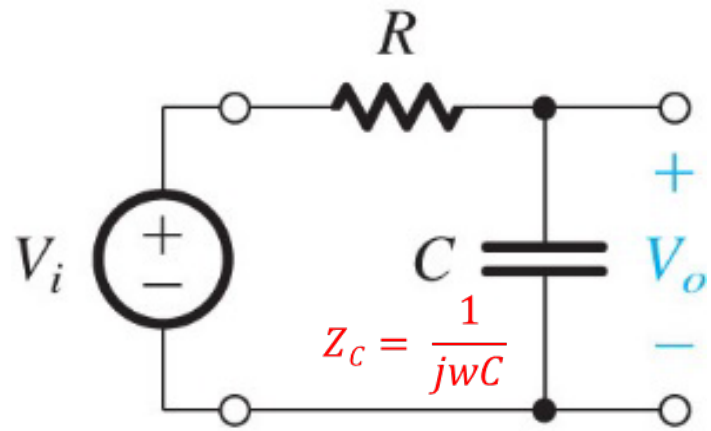

- **Simple Low Pass STC Network**
- **Network contains only one dynamic element, C, where its impedance is**

$$Z_C(\omega) = \frac{1}{j\omega C} = \frac{1}{sC}$$

$$T(w) = \frac{Vo(w)}{Vi(w)} = \frac{1/jwC}{1/jwC+R} = \frac{1}{1+jwRC}$$

- **… and the transfer function is**

$$T(\omega) = \frac{1}{1+j\omega RC} = \frac{1}{1+\frac{s}{\omega_0}} \quad where \;\; RC = \frac{1}{\omega_0}$$

1.6.4. **Bode Plot for Low Pass**

$$T(\omega) = \frac{1}{1 + j\omega RC} \qquad \omega_o = \frac{1}{RC}$$

Magnitude Response

$$|T(\omega)| = 1/(1+(\omega/\omega_o)^2)^{1/2}$$

0

$$T(\omega)_{dB} = 20\log(1) - 20\log(1+(\omega/\omega_o)^2)^{1/2}$$

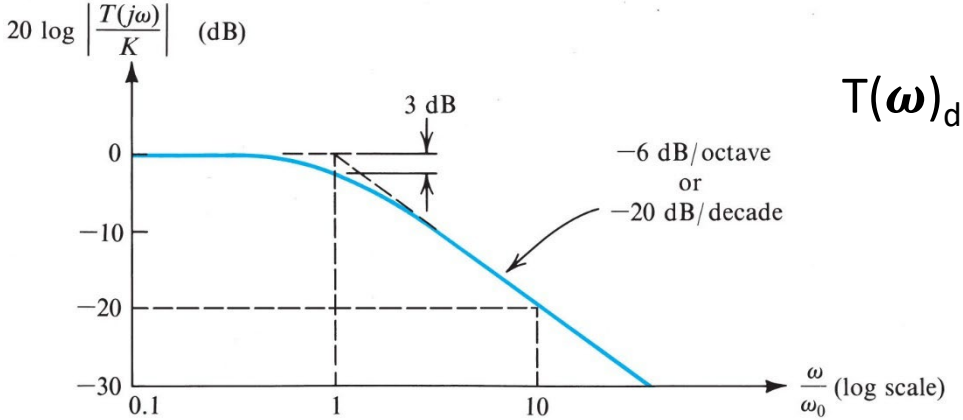

0	$\omega << \omega_o$
-3dB	$\omega = \omega_o$
-20 dB/decade	$\omega >> \omega_o$

Phase Response

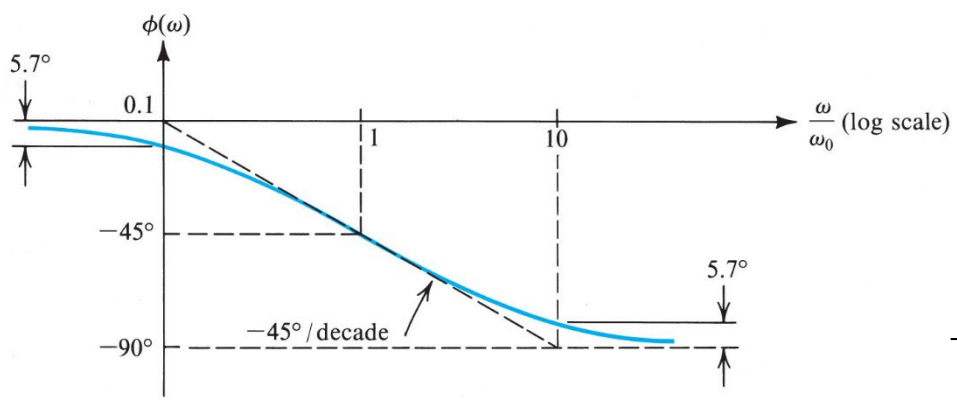

$$\phi(\omega) = -\tan^{-1}\left(\frac{\omega/\omega_o}{1}\right)$$

0	$\omega << \omega_o$
-45°	$\omega = \omega_o$
-90°	$\omega >> \omega_o$

Oxford University Publishing
Microelectronic Circuits by Adel S. Sedra and Kenneth C. Smith (0195323033)

1.6.4. **Single Time Constant (STC) Networks**

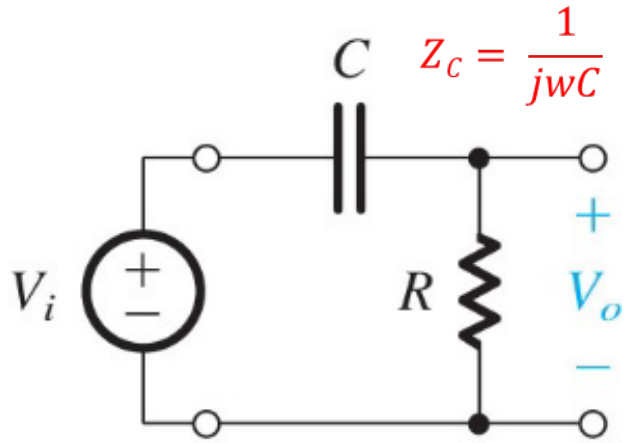

- **Simple High Pass STC Network**

- **… here the transfer function is**

$$T(\omega) = \frac{j\omega RC}{1 + j\omega RC} = \frac{s}{s + \omega_0} \quad where \;\; RC = \frac{1}{\omega_0}$$

$$T(w) = \frac{Vo(w)}{Vi(w)} = \frac{R}{1/jwC + R} = \frac{j\omega RC}{1 + j\omega RC} = \frac{s/\omega_o}{1 + s/\omega_o}$$

1.6.4. **Bode Plot for High Pass**

Magnitude Response

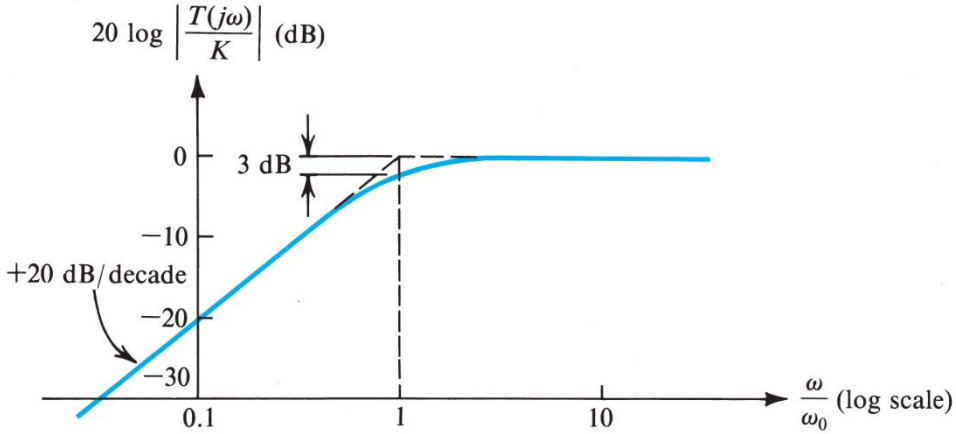

+20 dB/decade	$\omega << \omega_o$
-3 dB	$\omega = \omega_o$
0 dB	$\omega >> \omega_o$

Phase Response

$$\phi(\omega) = \tan^{-1}(\infty) - \tan^{-1}\left(\frac{\omega/\omega_o}{1}\right)$$

90°

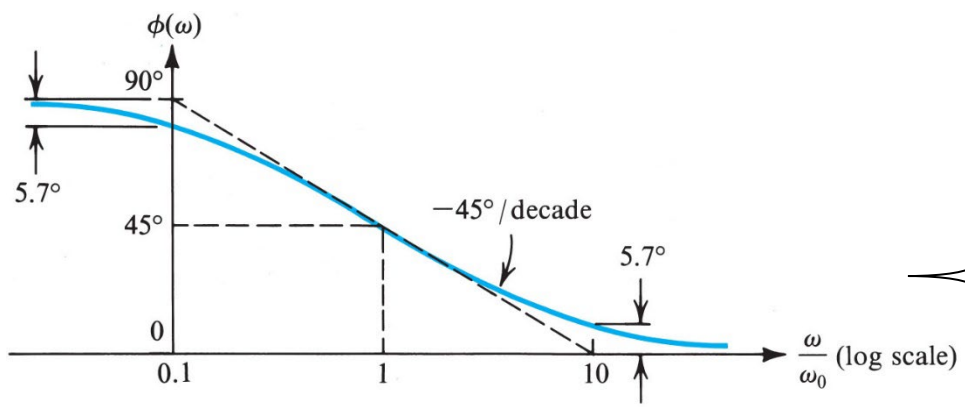

90°	$\omega << \omega_o$
45°	$\omega = \omega_o$
0°	$\omega >> \omega_o$

Oxford University Publishing
Microelectronic Circuits by Adel S. Sedra and Kenneth C. Smith (0195323033)

1.6.4. **General STC Characteristics**

$$K = T_{max}$$

Table 1.2 Frequency Response of STC Networks

	Low-Pass (LP)	High-Pass (HP)
Transfer Function $T(s)$	$\dfrac{K}{1+(s/\omega_0)}$	$\dfrac{Ks}{s+\omega_0}$
Transfer Function (for physical frequencies) $T(j\omega)$	$\dfrac{K}{1+j(\omega/\omega_0)}$	$\dfrac{K}{1-j(\omega_0/\omega)}$
Magnitude Response $\lvert T(j\omega)\rvert$	$\dfrac{\lvert K\rvert}{\sqrt{1+(\omega/\omega_0)^2}}$	$\dfrac{\lvert K\rvert}{\sqrt{1+(\omega_0/\omega)^2}}$
Phase Response $\angle T(j\omega)$	$-\tan^{-1}(\omega/\omega_0)$	$\tan^{-1}(\omega_0/\omega)$
Transmission at $\omega = 0$ (dc)	K	0
Transmission at $\omega = \infty$	0	K
3-dB Frequency	$\omega_0 = 1/\tau$; $\tau \equiv$ time constant $\tau = CR$ or L/R	
Bode Plots	in Fig. 1.23	in Fig. 1.24