Unit #5
Chapter #10.2: High Frequency MOSFET Model
Lecture 24

from **Microelectronic Circuits** Text
by Sedra and Smith
Oxford Publishing

10.2.1. **MOSFET Capacitances**

- **Recall that in analog circuits, like amplifiers, the MOSFET should operate in saturation … so the channel is pinched off**

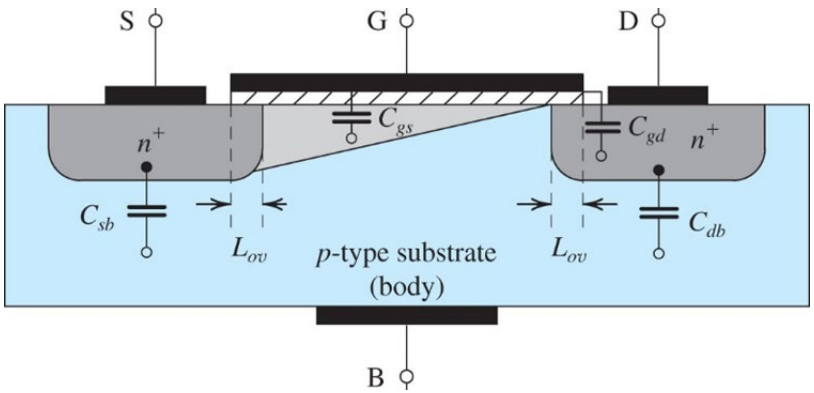

- **There are four principle intrinsic capacitors in a MOSFET**
  - **Gate-Source – C_{gs}**
  - **Gate-Drain – C_{gd}**
  - **Source-Body – C_{sb}**
  - **Drain-Body – C_{db}**

- **Key parameter for calculating capacitors**
  - **Gate width – W**
  - **Gate length – L**
  - **Overlap length – L_{ov}**
  - **Zero-bias capacitance – C_{sb0}, C_{db0}**
  - **Built-in potential – V_0**

10.2.1. **Formulas for MOSFET Capacitances**

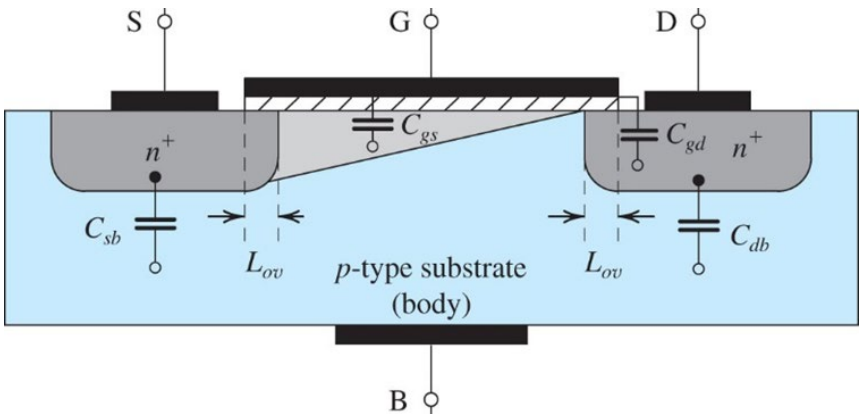

$$C_{ov} = WL_{ov}C_{ox}$$

$$C_{gd} = C_{ov}$$

$$C_{gs} = \frac{2}{3}WLC_{ox} + C_{ov}$$

$$C_{sb} = \frac{C_{sb0}}{\sqrt{1+\frac{V_{SB}}{V_0}}} \quad and \quad C_{db} = \frac{C_{db0}}{\sqrt{1+\frac{V_{DB}}{V_0}}}$$

10.2.1. **Small Signal Model (NMOS)**

- **Hybrid-π Model with all Capacitors**

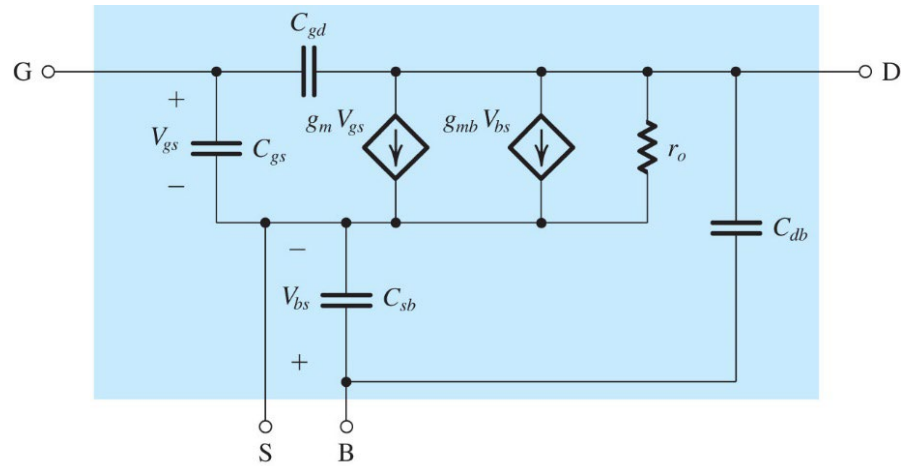

Note: in general C_{gs} and C_{gd} >> C_{sb} and C_{db} so we often remove the junction caps in the model

- **Simplified Hybrid-π and T-Models**

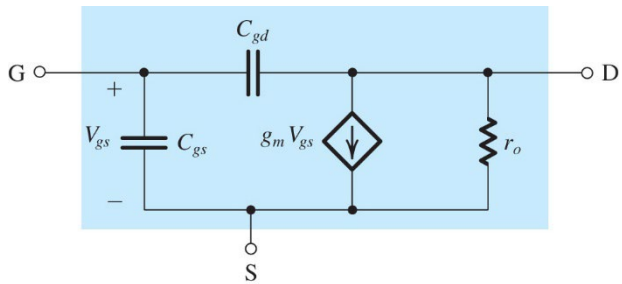

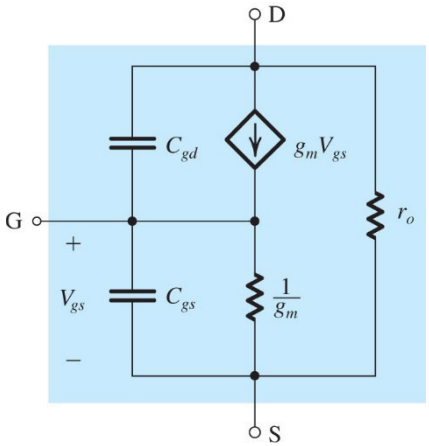

10.2.1. **MOSFET Unity Gain Frequency**

- f_T is the unity gain frequency of a MOSFET
- f_T is a figure of merit (FOM) for a MOSFET
- f_T is the frequency at which the short circuit current gain of the BASIC GAIN CELL become 1 A/A (unity)

Short Circuit Current Gain Configuration

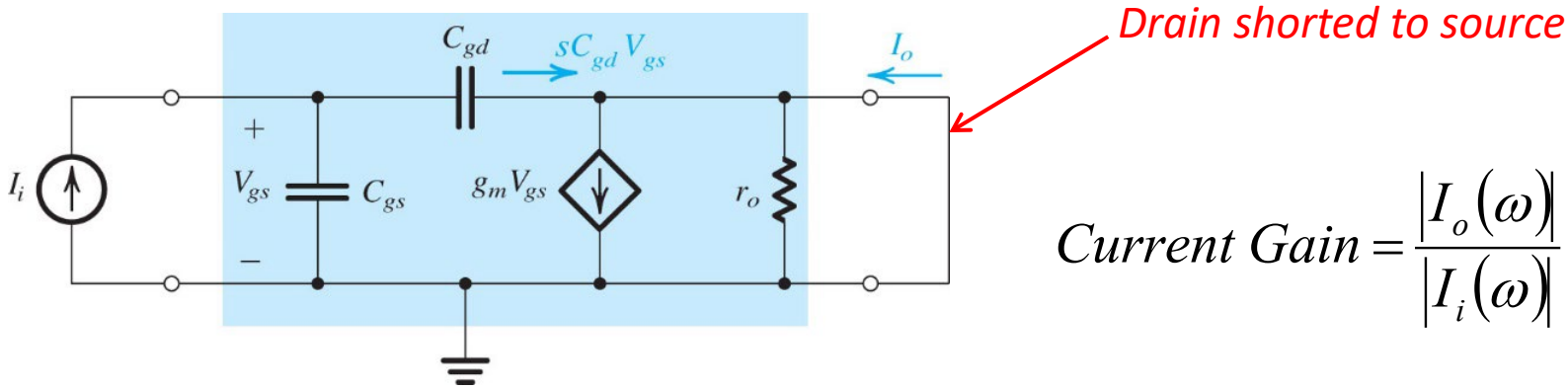

$$Current\ Gain = \frac{|I_o(\omega)|}{|I_i(\omega)|}$$

10.2.1. **Derivation of f_T – (of the MOSFET)**[1]

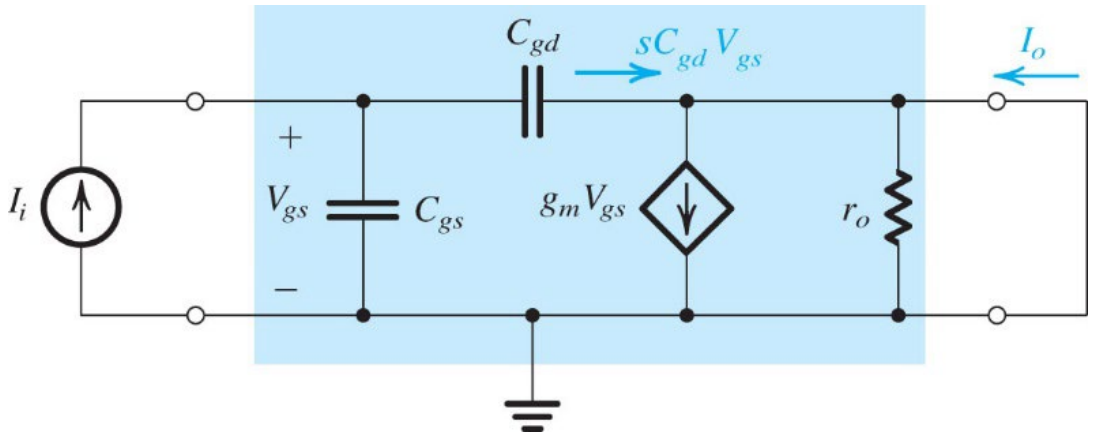

$$I_o(s) = g_m V_{gs} - sC_{gd}V_{gs} \approx g_m V_{gs}$$

$$I_i(s) = s\left(C_{gd} + C_{gs}\right)V_{gs}$$

$$I_o(s) \approx g_m V_{gs} = g_m \frac{I_i(s)}{s\left(C_{gd} + C_{gs}\right)}$$

so

$$Unity\ Gain = 1 \approx \frac{g_m}{\omega_T\left(C_{gd} + C_{gs}\right)}$$

$$f_T = \frac{\omega_T}{2\pi} \approx \frac{g_m}{2\pi\left(C_{gd} + C_{gs}\right)}$$

[1] Do not confuse this parameter with the Unity Gain Bandwidth of an amplifier.

10.2.1. **Plots for f_T**

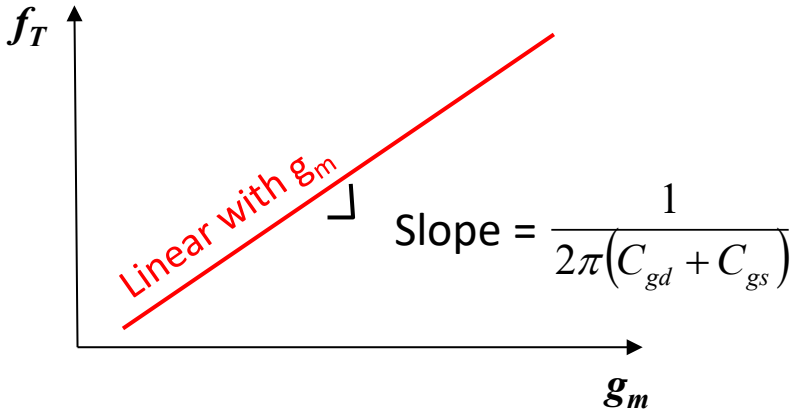

$$f_T = \frac{\omega_T}{2\pi} \approx \frac{g_m}{2\pi(C_{gd}+C_{gs})}$$

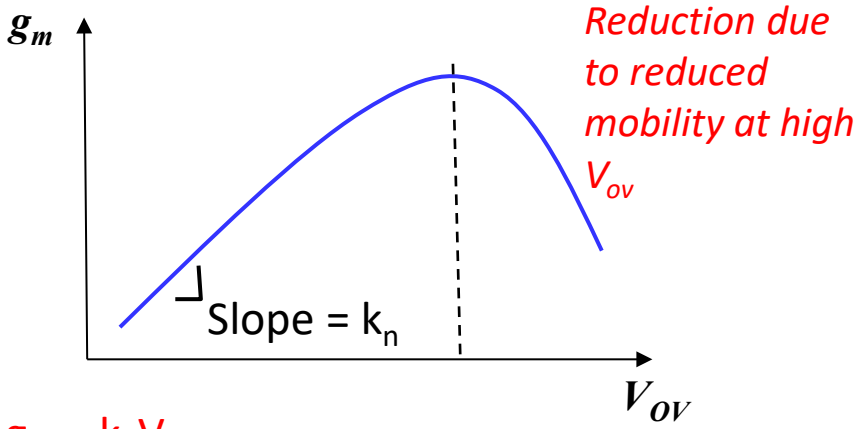
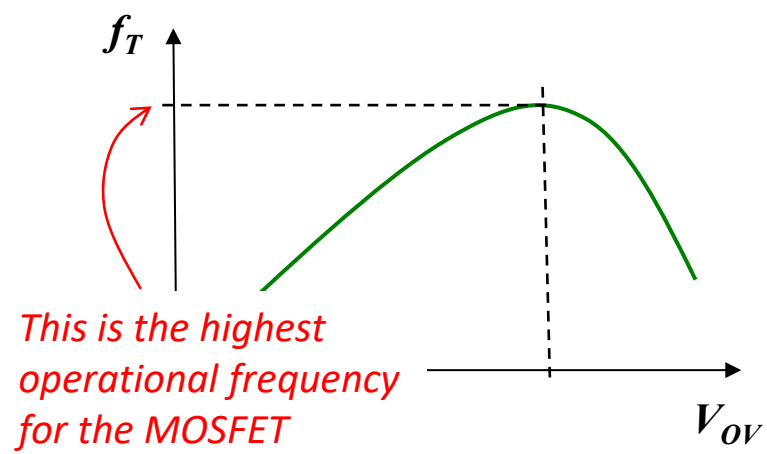
$g_m = k_n V_{ov}$