Unit #5
Chapter #10.3: High Frequency Response of CS Amplifier
Lecture 25

from **Microelectronic Circuits** Text
by Sedra and Smith
Oxford Publishing

10.1 **CS Amplifier Design**

- **Passive Load Resistor R_D**
- **The resistors R_{Gx} provides a bias & DC path to ground**
- **Capacitors C_{C1} and C_{C2} are called AC coupling capacitors – they couple the signal (v_{sig}) and load (R_L) to amplifier at mid to high frequencies**

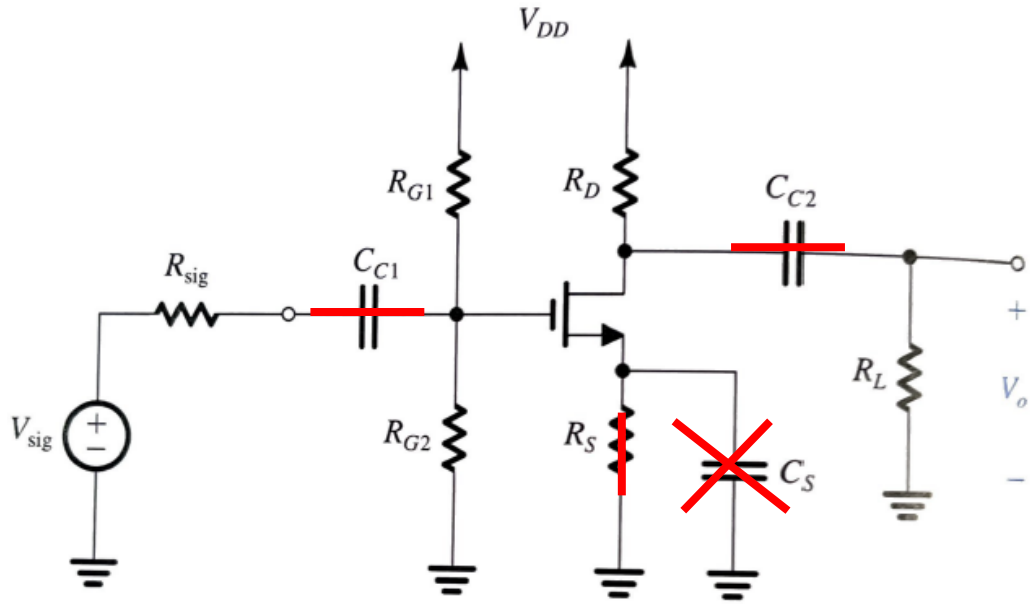

- **Capacitor C_S is the source bypass capacitor – it shorts the source to ground at mid to high frequencies**

10.1 **General Frequency Response**

$$|Z_C| = \frac{1}{\omega C} \rightarrow \infty \text{ at low frequency}$$

(open)

$$\rightarrow 0 \text{ at high frequency}$$

(short)

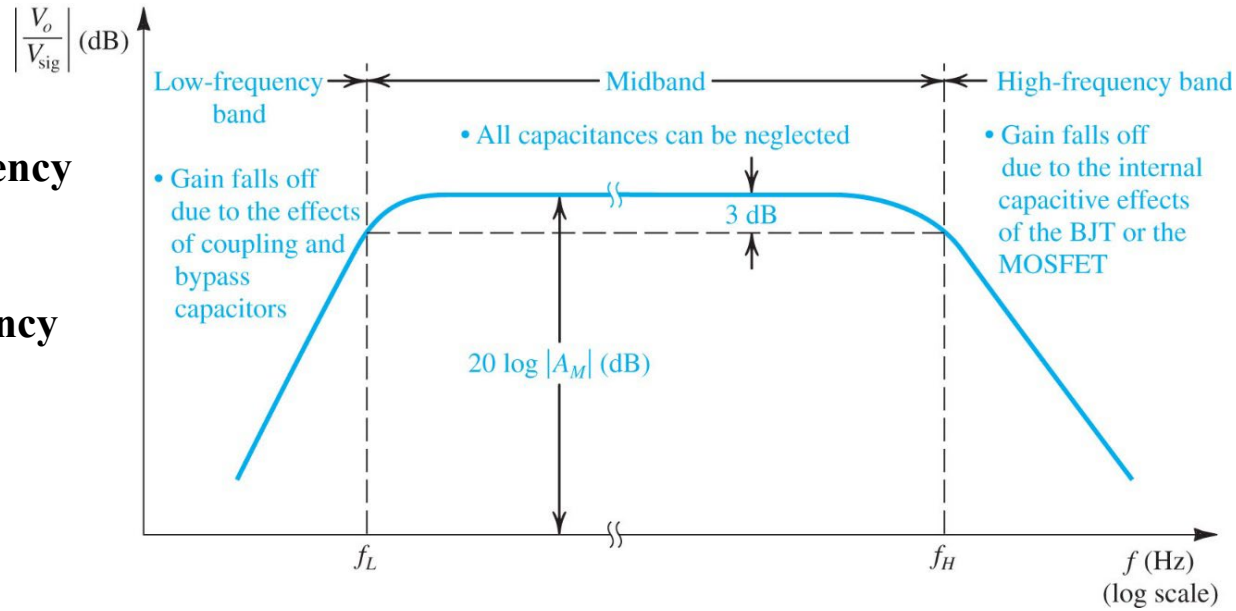

- **Typically, C_{C1}, C_{C2}, and CS are large, so they act at open circuit only at DC and become shorts at low frequencies.**
- **C_{gd} and C_{gs} are small, so they become shorts at much high frequencies.**

We will primarily focus our analysis on the CS high frequency response

10.3.1 **High Frequency Small Signal Model**

- **MOSFET small signal parameters**

$$g_m = \sqrt{2k_n' \frac{W}{L} I}$$

$$r_o = \frac{1}{\lambda I}$$

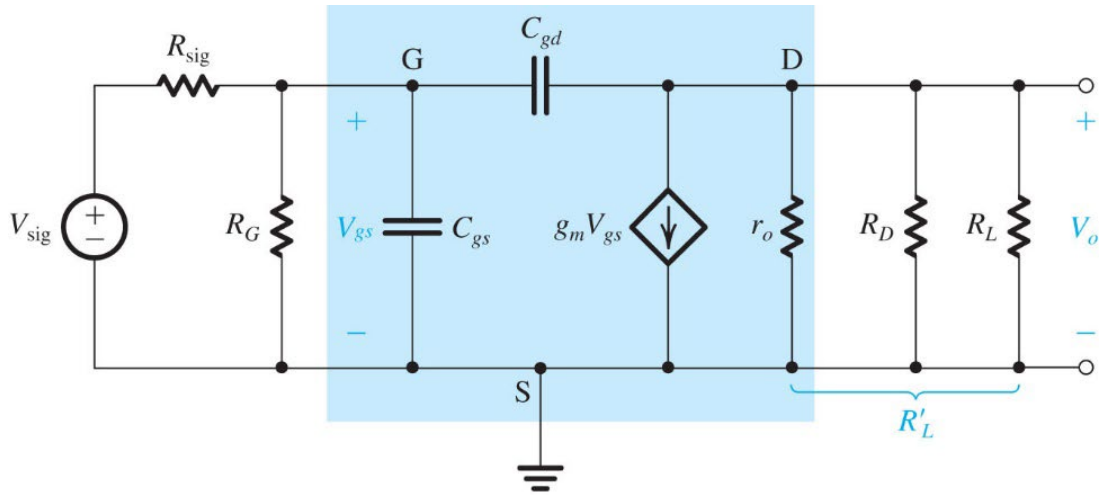

Our main objective is to find the midband (maximum) gain, A_M and the upper 3 dB frequency, f_H. This will give us most of the high frequency transfer function

Later, we will also show methods for obtaining the unity gain frequency, f_t, and the zero frequency, f_Z.

10.3.1 **Midband Gain, A_M**

- **In the midband frequency range C_{gd} and C_{gs} are open …**

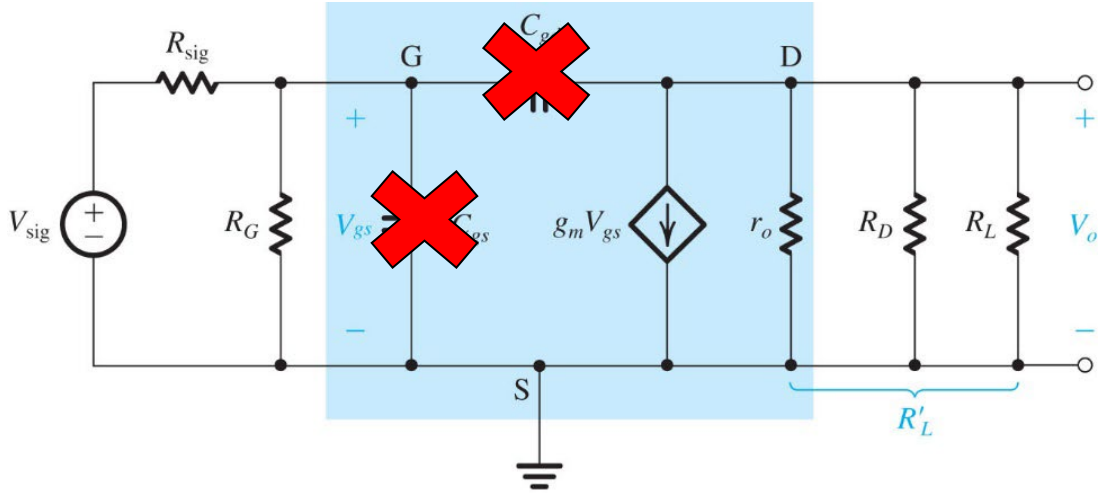

- **… so the midband gain is**

$$A_M = G_{V\max} = \frac{V_o}{V_{sig}} = -\frac{R_G}{R_G + R_{sig}}\left(g_m R_L'\right)$$

where

$$R_L' = r_o \parallel R_D \parallel R_L$$

10.3.1 **High Frequency Response (1st analysis)**

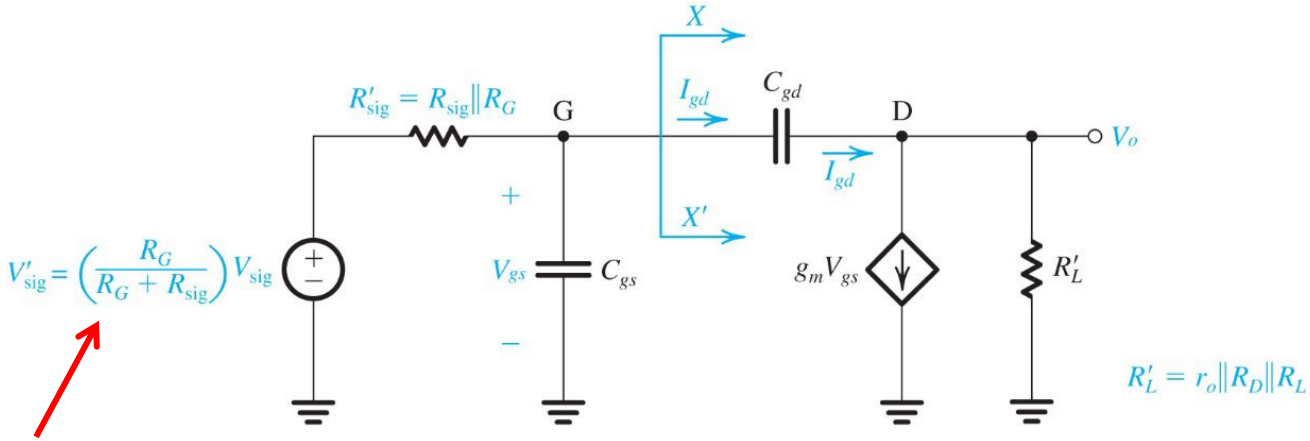

Use Thevenin Theorem

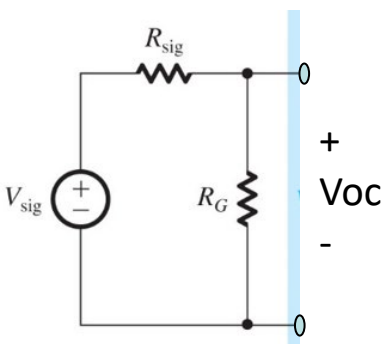

$R_{TH} = R_{sig}//R_G$

$$I_{gd} = sC_{gd}\left(V_{gs} - V_o\right)$$

$$V_o = \left(-g_m V_{gs} + I_{gd}\right)R_L' \approx -g_m V_{gs} R_L'$$

For ω near ω_H

so

$$I_{gd} \approx sC_{gd}\left(1 + g_m R_L\right)V_{gs}$$

For ω near ω_H

Oxford University Publishing
Microelectronic Circuits by Adel S. Sedra and Kenneth C. Smith (0195323033)

10.3.1 **High Frequency Response (1st analysis)**

C_{gd} replaced by an equivalent capacitance to ground, C_{eq}

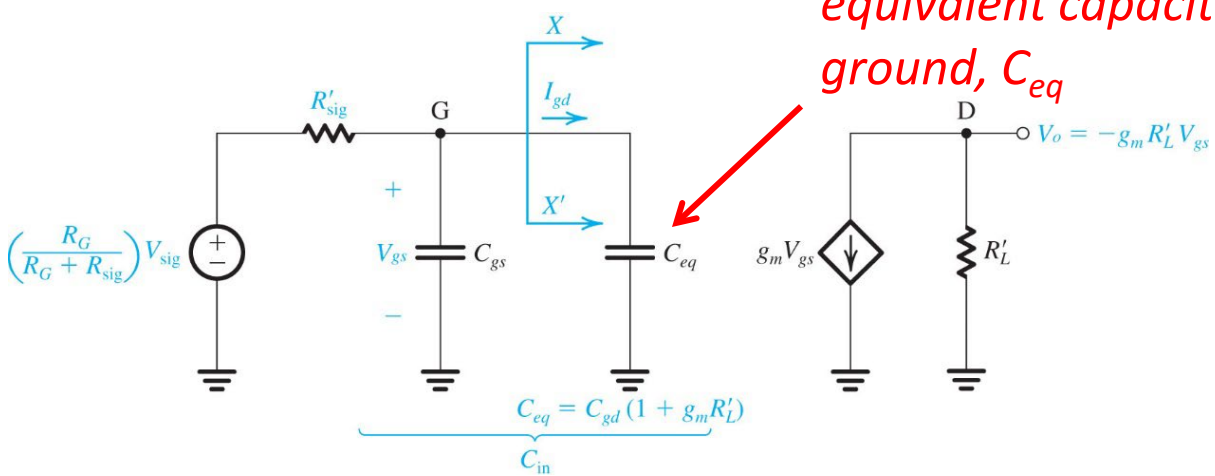

$$C_{eq} = C_{gd}(1 + g_m R_L)$$

This is called the Miller Multiplier

and

$$C_{in} = C_{gs} + C_{eq}$$

Is the only capacitance in the amplifier

$$I_{gd} \approx sC_{gd}(1 + g_m R'_L)V_{gs}$$

$$Z_{Ceq} = \frac{V_{gs}}{I_{gd}} = \frac{1}{sC_{gd}(1 + g_m R'_L)}$$

10.3.1 **High Frequency Response (1st analysis)**

$R'_{sig} = R_G // R_{sig}$

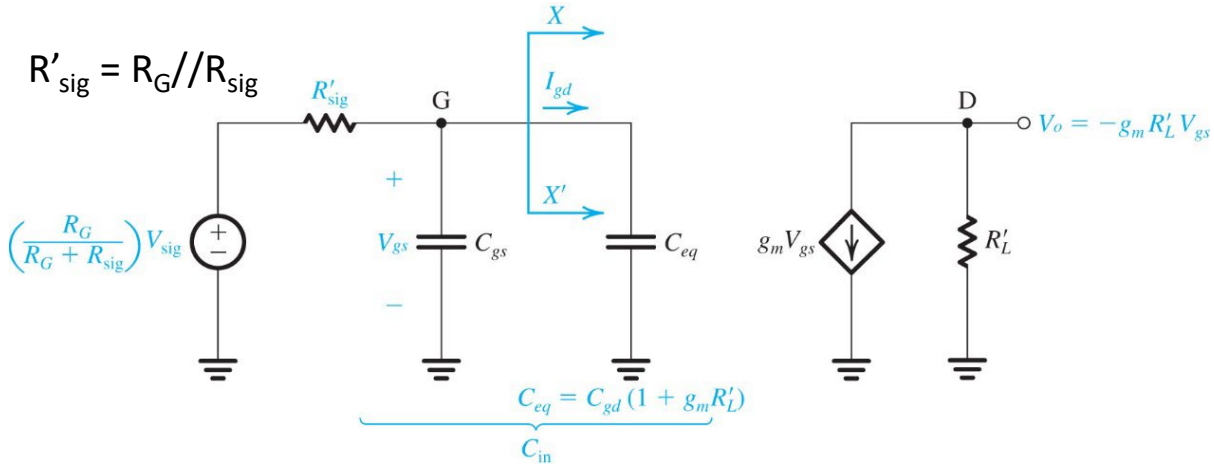

With the given approximation, we now have an STC network

$$G_v(s) = \frac{V_o}{V_{sig}} = A_M \frac{1}{1 + \frac{s}{\omega_H}}$$

$$\omega_H = \frac{1}{R_{sig}' C_{in}}$$

$$= -\frac{R_G}{R_G + R_{sig}} (g_m R_L') \frac{1}{1 + s R_{sig}' C_{in}}$$

10.3.1 **Bode Plot (1st analysis)**

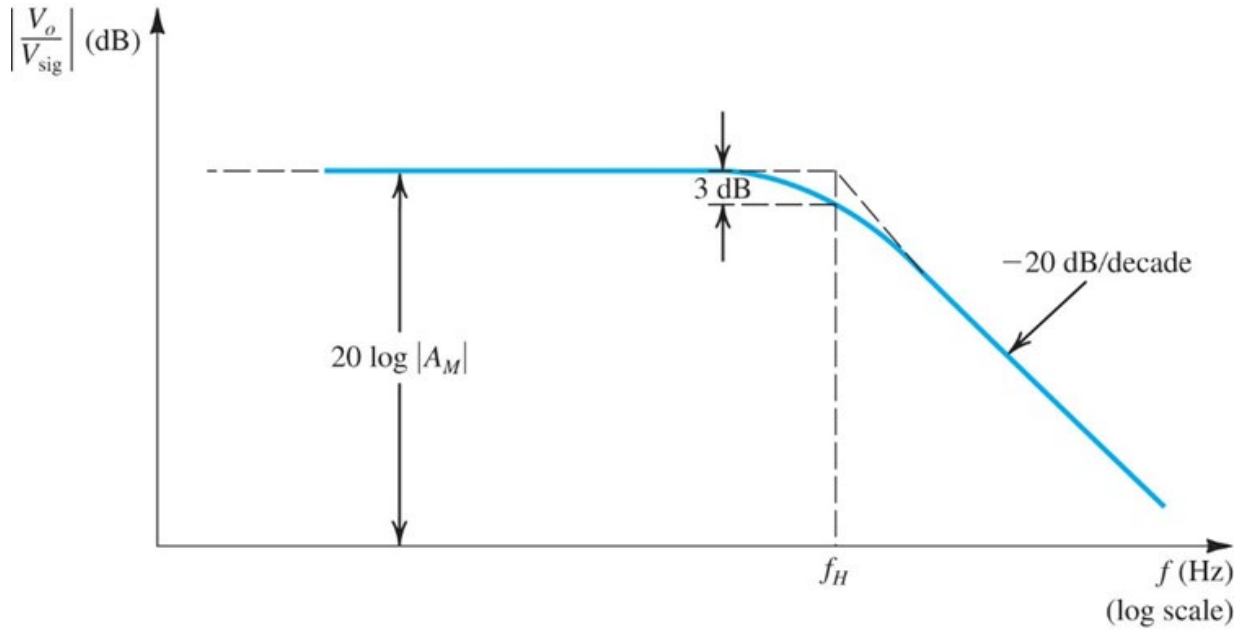

$$A_M = -\frac{R_G}{R_G + R_{sig}} g_m \left(r_o \parallel R_D \parallel R_L\right)$$

$$f_H = \frac{\omega_H}{2\pi} = \frac{1}{2\pi R_{sig}' C_{in}} = \frac{1}{2\pi\left(R_{sig} \parallel R_G\right)\left[C_{gs} + C_{gd}\left(1 + g_m R_L'\right)\right]}$$

This is the simplest analysis we do … we will see that there are other more accurate methods, but this is a good start …