Unit #5
Chapter #10.3.3:
Miller's Theorem
Lecture 26

from **Microelectronic Circuits** Text
by Sedra and Smith
Oxford Publishing

10.3. **Miller Multiplier**

- **Recall last lecture**

C_{gd} replaced by an equivalent capacitance to ground, C_{eq}

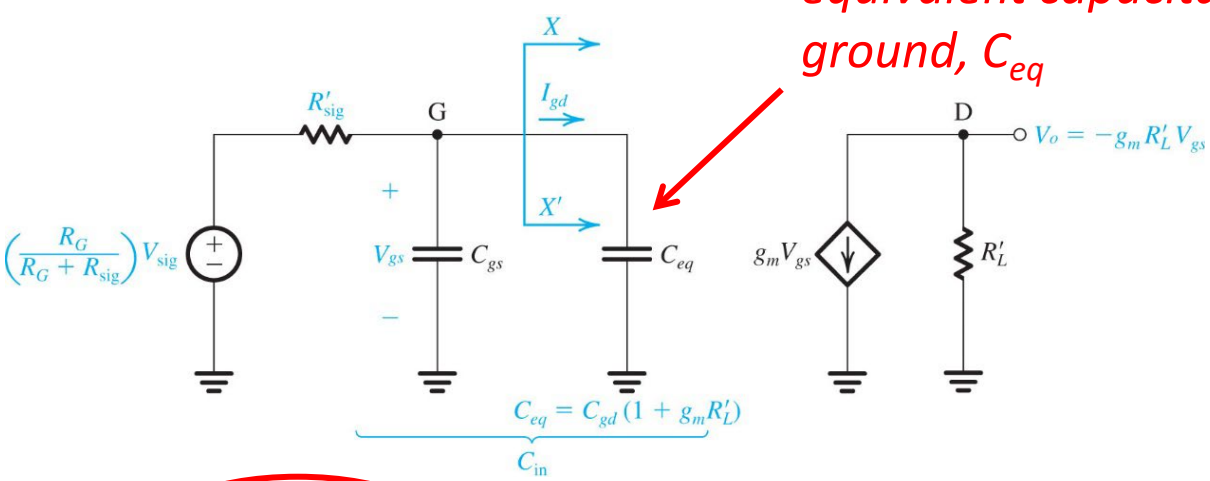

$$C_{eq} = C_{gd}\left(1 + g_m R_L\right)$$

This is called the Miller Multiplier

10.3. **Miller's Theorem**

- **While the Miller Multiplier was obtained from approximation, it can actually be shown to be derived from a general theorem known as Miller's Theorem.**

- **Miller's Theorem is applicable to all amplifiers that have an impedance which bridges the amplifier input to its output.**

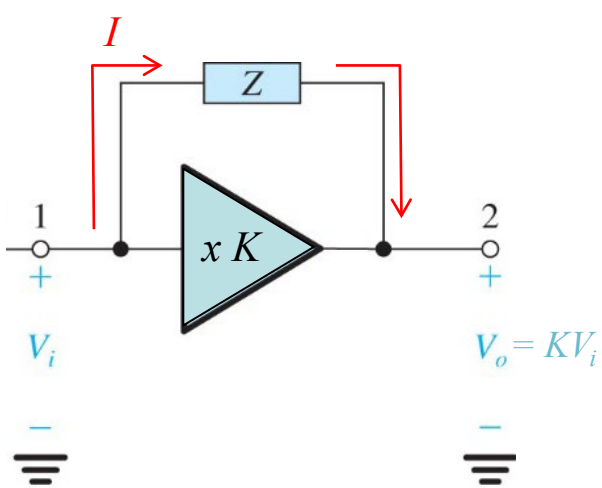

Z is the bridging (feedback) impedance

$$V_i - V_o = IZ$$

10.3. **Miller Equivalent Circuit**

- **Miller's Theorem states that Z can be replaced by two impedances which will pull the same current, I, out of the input node and push I into the output node:**
  - **Z_1 connected between the input node and ground**
  - **Z_2 connected between the output node and ground**

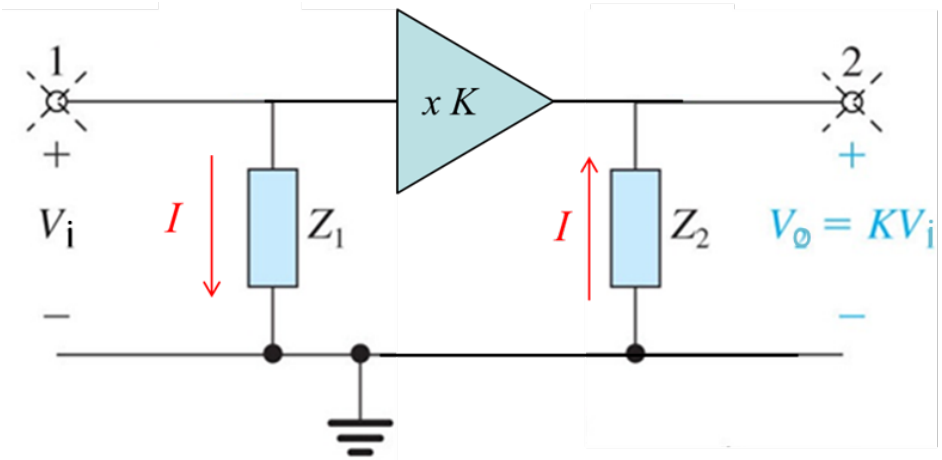

What values of Z_1 and Z_1 will give this equivalence?

10.3. **Miller Theorem Proof**

- **Claim (1):** $Z_1 = \dfrac{Z}{1-K}$

- **Proof (1)**

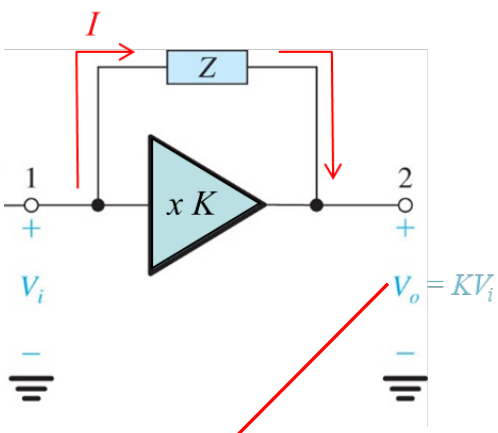

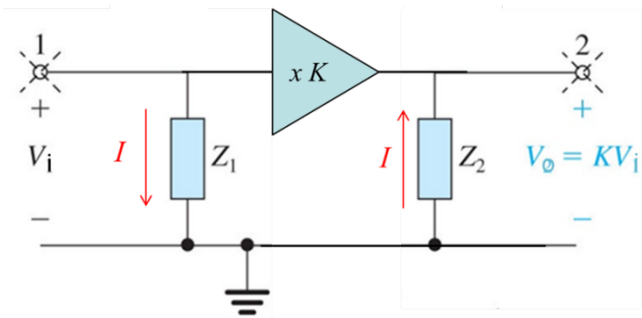

$$I = \frac{V_i - V_o}{Z} = \frac{V_i(1-K)}{Z} \quad \& \quad I = \frac{V_i}{Z_1} \quad \Rightarrow \quad Z_1 = \frac{Z}{1-K}$$

10.3. **Miller Theorem Proof**

- **Claim (2):** $Z_2 = \dfrac{Z}{1-\dfrac{1}{K}}$

- **Proof (2)**

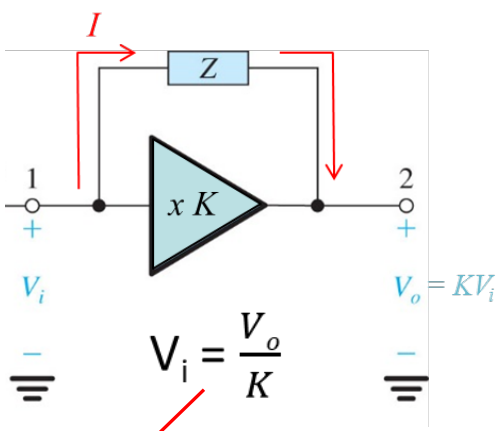

$$V_i = \frac{V_o}{K}$$

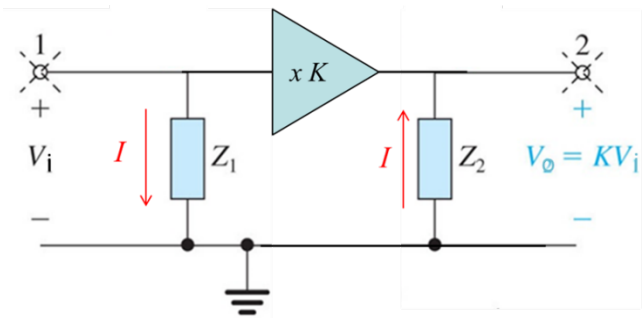

$$I = \frac{V_i - V_o}{Z} = \frac{V_o\left(\dfrac{1}{K}-1\right)}{Z} \quad \& \quad I = -\frac{V_0}{Z_2} \quad \Rightarrow \quad Z_2 = \frac{Z}{1-\dfrac{1}{K}}$$

10.3. **Capacitive Feedback**

- **If the feedback element is a capacitor** $Z = \dfrac{1}{sC}$

$$Z_1 = \frac{1}{sC_1} = \frac{1}{sC}\frac{1}{1-K}$$

so

$$C_1 = C(1-K)$$

Miller Multiplier

and

$$Z_2 = \frac{1}{sC_2} = \frac{1}{sC}\frac{1}{1-\frac{1}{K}}$$

so

$$C_2 = C\left(1-\frac{1}{K}\right)$$

NOTE: The Miller effect is normally applied for inverting amplifiers so

- K is negative
- $C_1 > C$
- $C_2 \approx C$