Unit #5
Chapter #10.3.4:
Frequency Response of CS with Low R_{sig}
Lecture 27

from **Microelectronic Circuits** Text
by Sedra and Smith
Oxford Publishing

10.3.4 **CS with Negligible R_{sig}**

- **If R_{sig} is very small it may be removed from the small signal CS model**

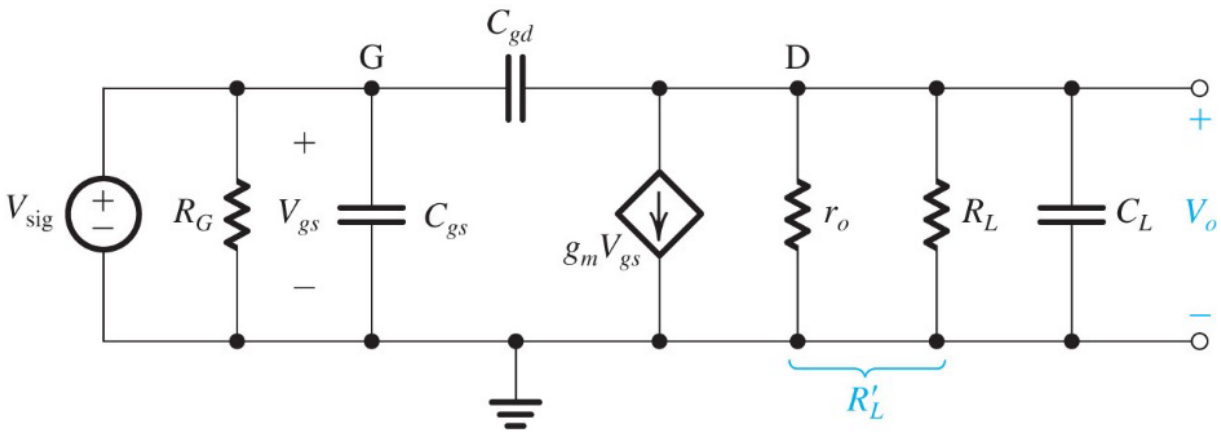

- **In this case the high frequency response will no longer be limited by R_{sig} and the input capacitance … which is typically dominated by the Miller capacitor** $C_{eq} = C_{gd}\left(1 + g_m R_L'\right)$ **… but we will have to consider the load capacitor, C_L.**

Here we will not use the Miller Theorem

10.3.4 **Derivation of High Frequency Voltage Gain**

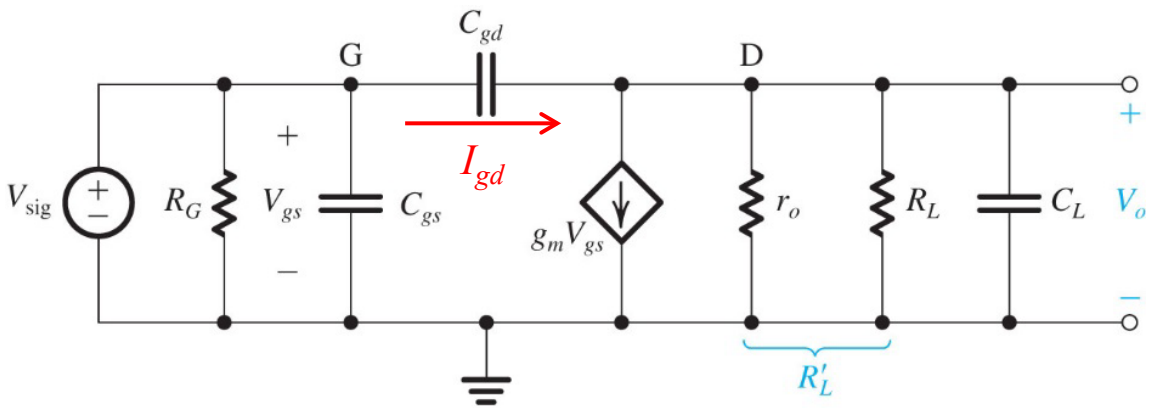

1) $V_{sig} = V_{gs}$

2) $I_{gd} = sC_{gd}\left(V_{sig} - V_o\right)$

3) $I_{gd} = g_m V_{gs} + \dfrac{V_o}{R_L'} + sC_L V_o$

10.3.4 **Derivation of High Frequency Voltage Gain**

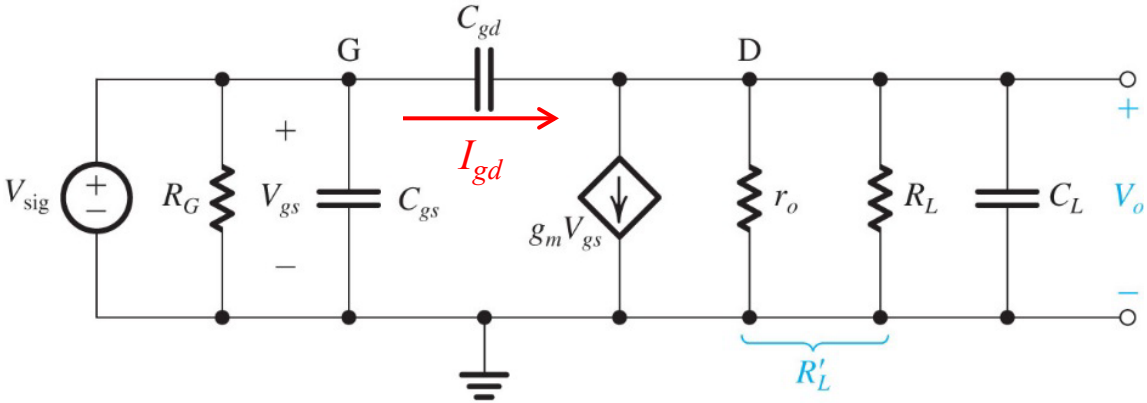

4) $sC_{gd}V_{sig} - sC_{gd}V_o = g_m V_{sig} + \frac{V_o}{R_L'} + sC_L V_o$

5) $[1 + s(C_L + C_{gd})R_L']V_o = -g_m R_L' V_{sig} + sC_{gs}R_L' V_{sig}$

6) $$\boxed{\frac{V_o}{V_{sig}} = -g_m R_L' \frac{1 - s(C_{gd}/g_m)}{1 + s(C_L + C_{gd})R_L'}}$$

10.3.4 **Poles and Zeros**

zero

$$\frac{V_o}{V_{sig}} = -g_m R_L' \frac{1 - s(C_{gd}/g_m)}{1 + s(C_L + C_{gd})R_L'}$$

A_m

pole

- **Transfer function now shows one dominant pole at**

$$f_H = \frac{1}{2\pi(C_L + C_{gd})R_L'}$$

Note: $f_H << f_z$ ..

Why?

R_L' ~ 10's kΩ
$1/g_m$ ~ 100's Ω

- **… and one zero at**

$$f_Z = \frac{g_m}{2\pi C_{gd}}$$

10.3.4 **Bode Plot**

$$f_Z = \frac{g_m}{2\pi C_{gd}}$$

$$f_H = \frac{1}{2\pi (C_L + C_{gd}) R_L'}$$

$$|A_v(f)| = \left|\frac{V_o}{V_{sig}}\right| = g_m R_L' \frac{\sqrt{1+\left(\frac{f}{f_z}\right)^2}}{\sqrt{1+\left(\frac{f}{f_H}\right)^2}}$$

$$A_{vdB} = 20\log(\underbrace{g_m R_L'}_{A_M}) - 20\log\left(\sqrt{1+\left(\frac{f}{f_H}\right)^2}\right) + 20\log\left(\sqrt{1+\left(\frac{f}{f_z}\right)^2}\right)$$

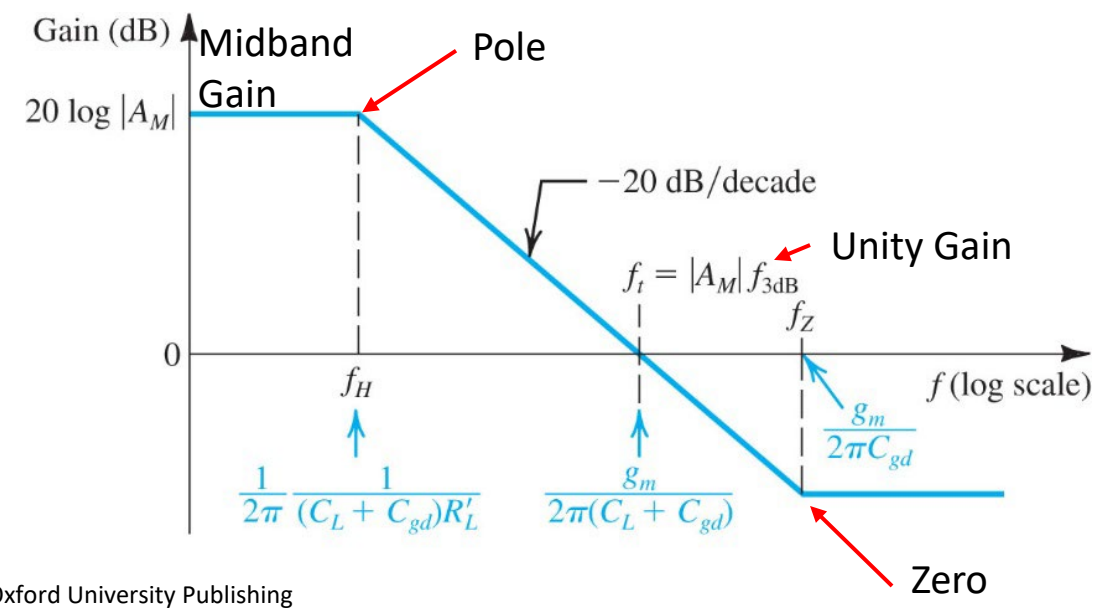

10.3.4 **Unity Gain & Gain-Bandwidth Product**

- **The unity gain, f_t, is defined as frequency that $|A_v| = 1$**
- **If $f_H << f_t$ ($A_M > 5$) and $f_t << f_Z$ ($C_L > 5C_{gd}$)**

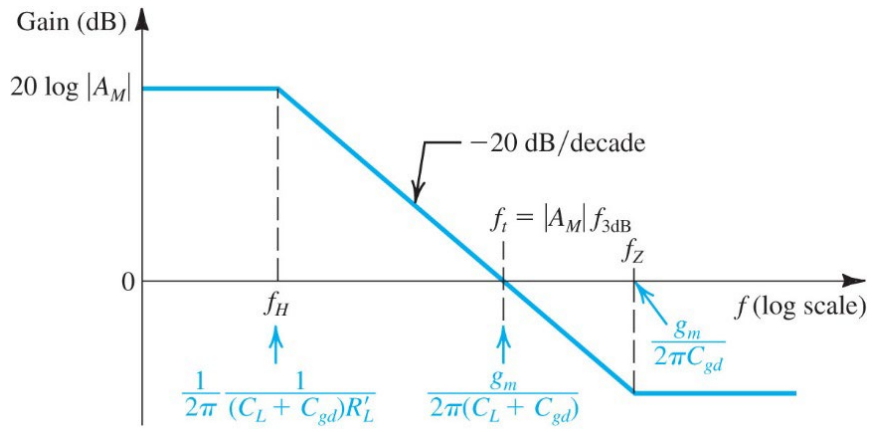

$$|A_v(f_t)| = 1 = g_m R_L' \frac{\sqrt{1+\left(\frac{f_t}{f_z}\right)^2}}{\sqrt{1+\left(\frac{f_t}{f_H}\right)^2}} \approx \frac{g_m R_L'}{f_t} f_H$$

$f_t << f_Z$

$f_H << f_t$

$$f_t \approx \overbrace{g_m R_L'}^{A_m} f_H$$

-3dB

Unity gain equals the product of the max gain and bandwidth