Unit #5
Chapter #10.4:
Method of Open Circuit Time Constants
Lecture 29

from **Microelectronic Circuits** Text
by Sedra and Smith
Oxford Publishing

10.3.4 **High Frequency Response Example with Zeros and Poles**

- **We saw in section 10.3.4, an example high frequency response that showed the impact of both zeros and poles**

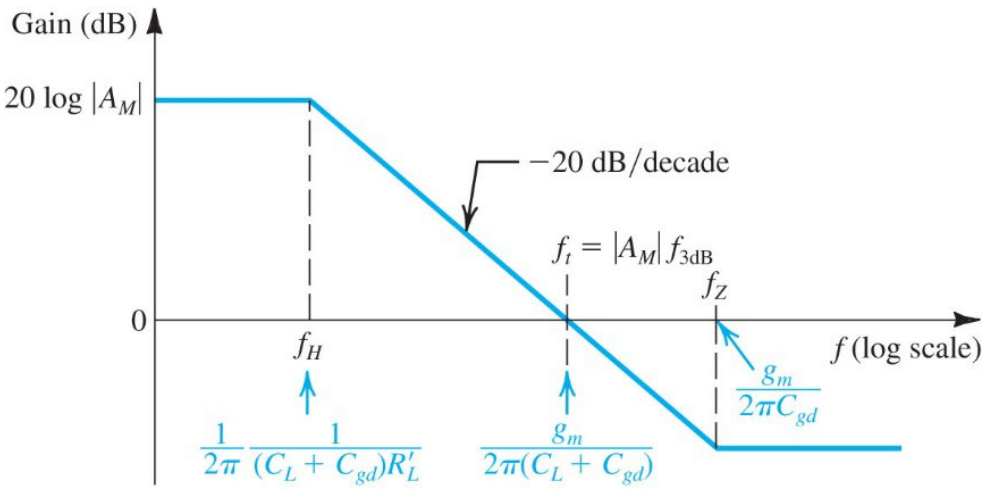

(c)

As we will see in a few lectures, we are not as concerned about zeros or poles which impact frequency response after gain has crossed 1 V/V (or 0 dB)

10.4.3 **Linearizing the polynomial**

- **If all zeros are found at very high frequencies such that the gain function $|A(w_{z,min})| < 1$, then the higher order terms of the numerator of $F_H(s)$ are often dropped and**

$$F_H(s) \approx \frac{1}{(1+s/\omega_{p1})(1+s/\omega_{p2})\cdots(1+s/\omega_{pm})} = \frac{1}{1+b_1 s+b_2 s^2+\ldots+b_m s^m}$$

- **As with the square root method, the high frequency 3-dB pole, can be estimated by dropping the higher order terms in the denominator, i.e., by linearizing the polynomial.**

$$F_H(s) \approx \frac{1}{1+b_1 s} = \frac{1}{1+s/\omega_H}$$

$$\therefore \quad b_1 = \frac{1}{\omega_H}$$

What is b_1?

10.4.3 **Estimating the first order coefficient – b_1**

- **This is easy … since**

$$F_H(s) \approx \frac{1}{(1+s/\omega_{p1})(1+s/\omega_{p2})\cdots(1+s/\omega_{pm})}$$

$$= \frac{1}{1+s\left(\frac{1}{\omega_{p1}}+\frac{1}{\omega_{p2}}+\ldots+\frac{1}{\omega_{pm}}\right)+\text{high order terms}}$$

- **Therefore**

$$b_1 = \frac{1}{\omega_H} = \frac{1}{\omega_{p1}} + \frac{1}{\omega_{p2}} + \ldots + \frac{1}{\omega_{pm}} = \sum \frac{1}{\omega_{pk}}$$

$$\boldsymbol{\tau}_{\mathrm{H}} = \boldsymbol{\tau}_{\mathrm{p1}} + \boldsymbol{\tau}_{\mathrm{p2}} + \ldots\ldots \boldsymbol{\tau}_{\mathrm{pm}}$$

10.4.3 **Open Circuit Time Constants**

- **Each individual pole, ω_{pk}, is associated with a time constant, τ_k.**

$$\frac{1}{\omega_{pk}} = \tau_k = C_k R_k$$

- C_k **indexes each capacitor in the equivalent circuit … so for example in the CS equivalent circuit below there are how many?**

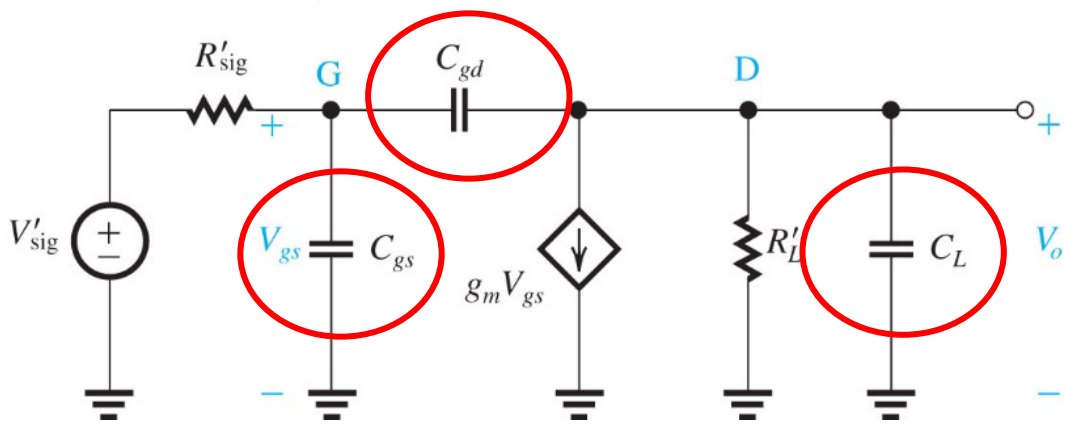

3

10.4.3 **Open Circuit Time Constants**

- **Since** $b_1 = \tau_1 + \tau_2 + \ldots + \tau_m = C_1R_1 + C_2R_2 + \ldots C_mR_m$

  Each τ_k is obtained by setting all other capacitors to zero and multiplying C_k by the resistance R_k 'seen' by it

- **To see how this is done, we will apply the method of open circuit time constants (OCTC) to the CS amplifier in the next section**

10.4.4 **Applying OCTC method to CS amplifier**

- **In the equivalent CS amplifier below, since there are 3 capacitors, we have 3 time constants**

$$\tau_{gs} = C_{gs} R_{gs}$$

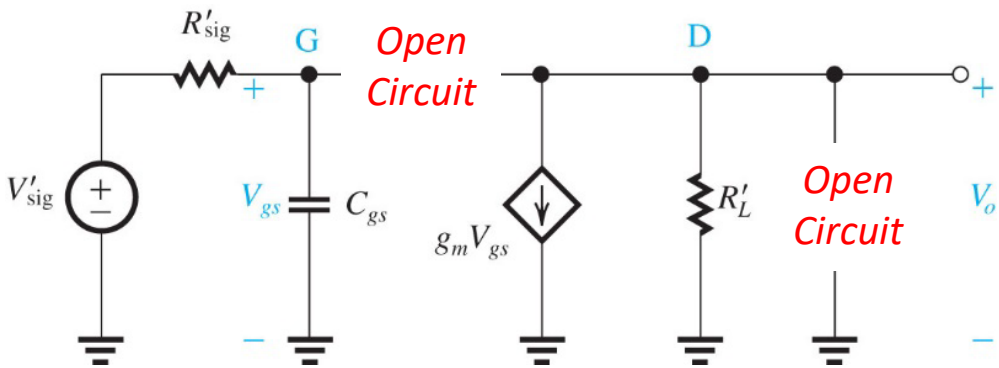

10.4.4 **Applying OCTC method to CS amplifier**

- **In the equivalent CS amplifier below, since there are 3 capacitors, we have 3 time constants**

$$\tau_{gd} = C_{gd} R_{gd}$$

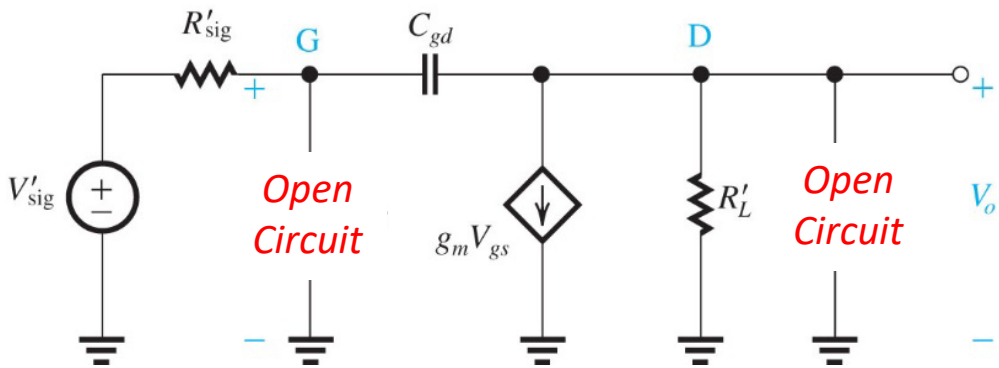

10.4.4 **Applying OCTC method to CS amplifier**

- **In the equivalent CS amplifier below, since there are 3 capacitors, we have 3 time constants**

$$\tau_{CL} = C_L R_{CL}$$

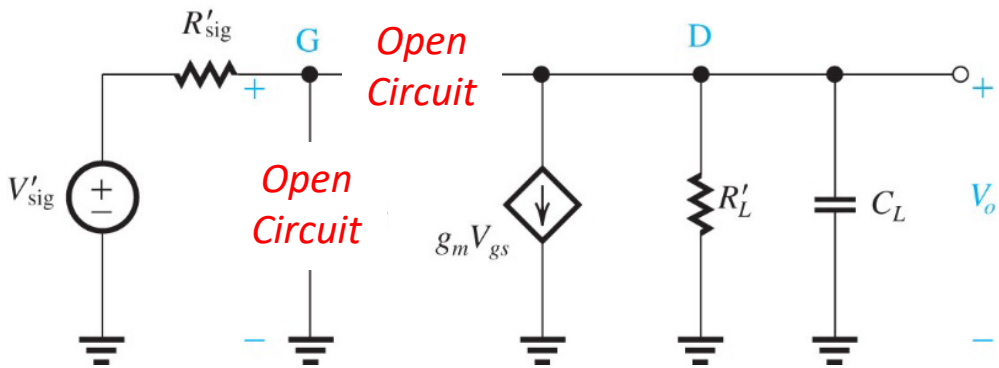

10.4.4 **Equivalent Resistance Calculations**

- **In addition to the open circuit created by removing capacitors, all independent sources are removed, i.e., voltage sources are shorted and current sources opened**

- **For R_{gs}**

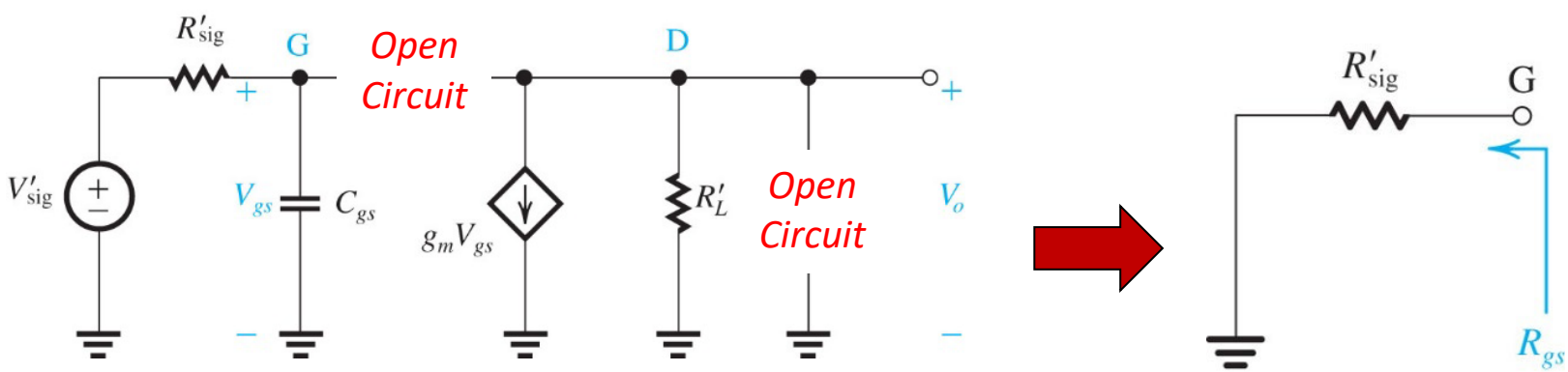

$$R_{gs} = R_{sig'}$$

10.4.4 **Equivalent Resistance Calculations**

- **For R_{gd}**

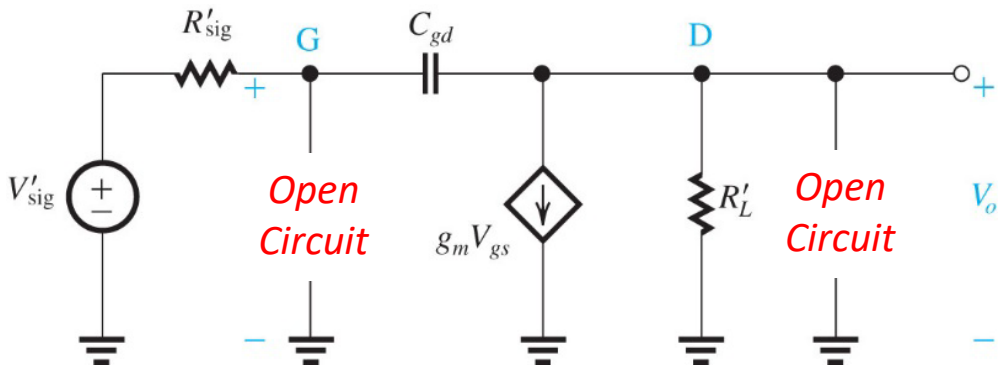

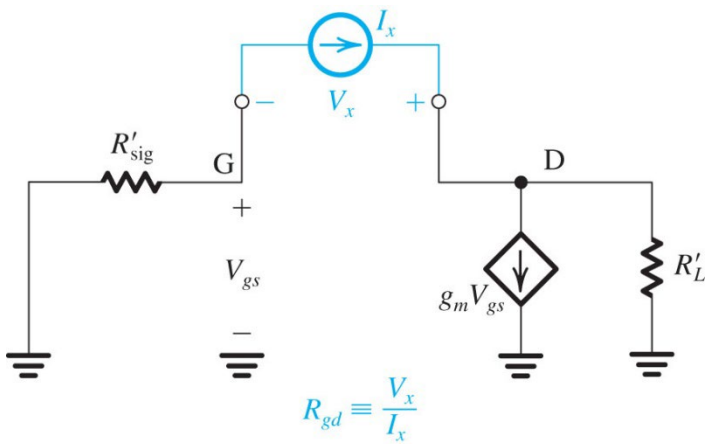

$$I_x = g_m V_{gs} + \left(V_x + V_{gs}\right)/R_{L'}$$

$$V_{gs} = -I_x R_{sig'}$$

$$I_x\left(1 + g_m R_{sig'} + R_{sig'}/R_{L'}\right) = V_x/R_{L'}$$

$$R_{gd} = V_x/I_x = R_{L'} + g_m R_{sig'} R_{L'} + R_{sig'}$$

10.4.4 **Equivalent Resistance Calculations**

- **For R_{CL}**

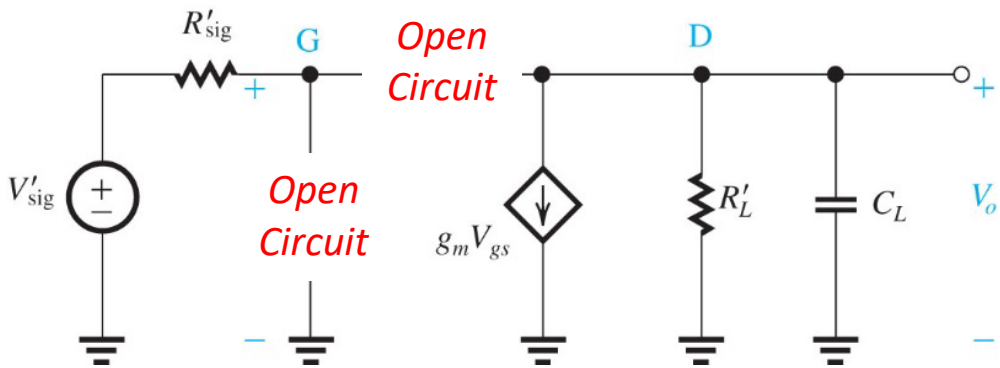

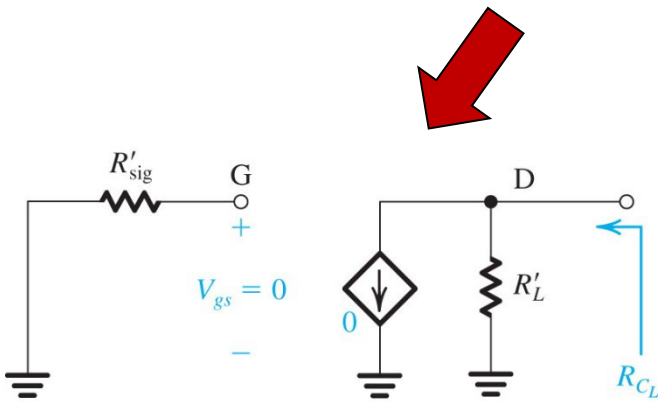

$$R_{CL} = R_{L'}$$

10.4.4 Estimating ω_H for CS using OCTC method

- **Finally we can estimate ω_H as**

$$\omega_H = \frac{1}{\tau_{gs} + \tau_{gd} + \tau_{CL}}$$

$$= \frac{1}{C_{gs}R_{sig'} + C_{gd}\left[R_{sig'}\underbrace{\left(1 + g_m R_L'\right)}_{\text{Note the Miller Multiplier}} + R_L'\right] + C_L R_L'}$$

- **Let's look at example 10.5**