Unit #1
Chapter #5.3: MOSFET CIRCUITS at DC
Lecture 3

from **Microelectronic Circuits** Text
by Sedra and Smith
Oxford Publishing

Review of MOSFET Equations - NMOS

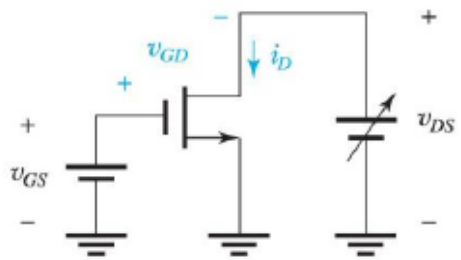

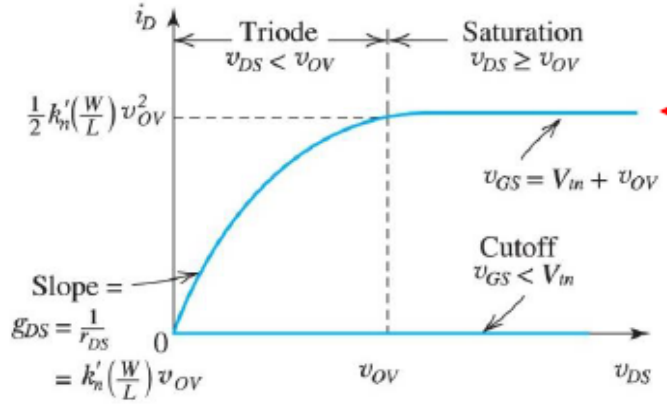

$i_{D,sat} = k_n'(W/L)V_{OV}^2/2$

$k_n = k_n' (W/L)$

$k_n' = \mu_n C_{ox}$

$C_{ox} = \varepsilon_{ox}/t_{ox}$

$\lambda = 1/V_A$

- $v_{GS} < V_{tn}$: no channel; transistor in cutoff; $i_D = 0$
- $v_{GS} = V_{tn} + v_{OV}$: a channel is induced; transistor operates in the triode region or the saturation region depending on whether the channel is continuous or pinched off at the drain end;

Triode Region

Continuous channel, obtained by:

$$v_{GD} > V_{tn}$$

or equivalently:

$$v_{DS} < v_{OV}$$

Then,

$$i_D = k_n'\left(\frac{W}{L}\right)\left[(v_{GS} - V_{tn})v_{DS} - \frac{1}{2}v_{DS}^2\right]$$

or equivalently,

$$i_D = k_n'\left(\frac{W}{L}\right)\left(v_{OV} - \frac{1}{2}v_{DS}\right)v_{DS}$$

Saturation Region

Pinched-off channel, obtained by:

$$v_{GD} \leq V_{tn}$$

or equivalently:

$$v_{DS} \geq v_{OV}$$

Then

$$i_D = \frac{1}{2}k_n'\left(\frac{W}{L}\right)(v_{GS} - V_{tn})^2$$

or equivalently,

$$i_D = \frac{1}{2}k_n'\left(\frac{W}{L}\right)v_{OV}^2$$

Including Channel Length Modulation

$i_D = i_{D,sat}[1 + (v_{DS}-V_{OV})/V_A]$ (1)

$\approx i_{D,sat}(1 + v_{DS}/V_A)$ (2)

$r_o = 1/\lambda i_{D,sat}$

This channel resistance, r_{DS} is

$r_{DS} = v_{DS}/i_D = 1/(k_n V_{OV})$

Review of MOSFET Equations - PMOS

5.2.5. $i_D - v_{DS}$ Characteristics (enhancement model PMOS)

$k_p = k_p' (W/L)$, $k_p' = \mu_p C_{ox}$

$C_{ox} = \varepsilon_{ox}/t_{ox}$, $\lambda = 1/V_A$

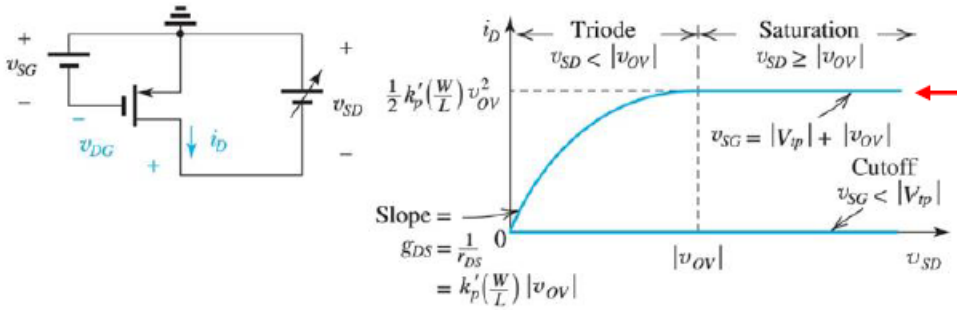

$i_{D,sat} = k_p'(W/L)(v_{SG} - |V_{tp}|)^2/2$

- $v_{SG} < |V_{tp}|$: no channel; transistor in cutoff; $i_D = 0$
- $v_{SG} = |V_{tp}| + |v_{OV}|$: a channel is induced; transistor operates in the triode region or in the saturation region depending on whether the channel is continuous or pinched off at the drain end;

Triode Region

Continuous channel, obtained by:

$$v_{DG} > |V_{tp}|$$

or equivalently

$$v_{SD} < |v_{OV}|$$

Then

$$i_D = k_p'\left(\frac{W}{L}\right)\left[(v_{SG} - |V_{tp}|)v_{SD} - \frac{1}{2}v_{SD}^2\right]$$

or equivalently

$$i_D = k_p'\left(\frac{W}{L}\right)\left(|v_{OV}| - \frac{1}{2}v_{SD}\right)v_{SD}$$

Saturation Region

Pinched-off channel, obtained by:

$$v_{DG} \leq |V_{tp}|$$

or equivalently

$$v_{SD} \geq |v_{OV}|$$

Then

$$i_D = \frac{1}{2}k_p'\left(\frac{W}{L}\right)(v_{SG} - |V_{tp}|)^2$$

or equivalently

$$i_D = \frac{1}{2}k_p'\left(\frac{W}{L}\right)v_{OV}^2$$

- If channel length modulation is included

$\lambda < 0\ V^{-1}$

and

$i_D = i_{D,sat}(1 - \lambda v_{SD})$

$r_o = 1/\lambda i_{D,sat}$

Saturation

Oxford University Publishing
Microelectronic Circuits by Adel S. Sedra and Kenneth C. Smith (0195323033)

Example 5.3

Design circuit so that i_D = 0.4 mA and V_D = 0.5 V. You are given V_t = 0.7 V, k_n'=100 $\mu A/V^2$, L = 1 μm, W = 32 μm, and λ = 0 V^{-1}.

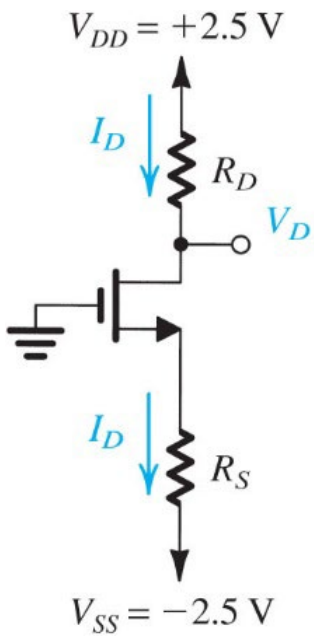

Example 5.4

Neglect λ and express the i-v relationship for the diode connected transistor below in terms of k_n and V_t

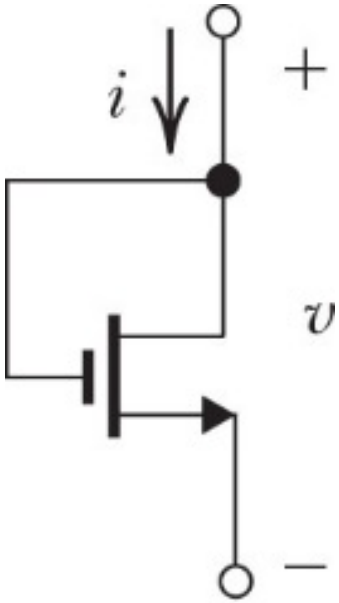

Example 5.5

Design circuit to get V_D = 0.1 V. You are given V_t = 1 V, k_n= 1 mA/V^2. What is the effective resistance between drain and source at the DC operating point? Why does λ not matter for this problem?

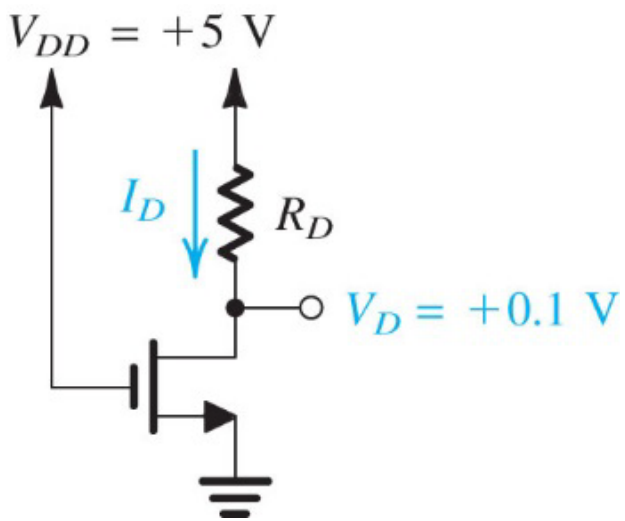

Example 5.6

You are given V_t = 1 V, k_n= 1 mA/V^2, and λ = 0 V^{-1}. Analyze the circuit to determine all the node voltages and branch currents

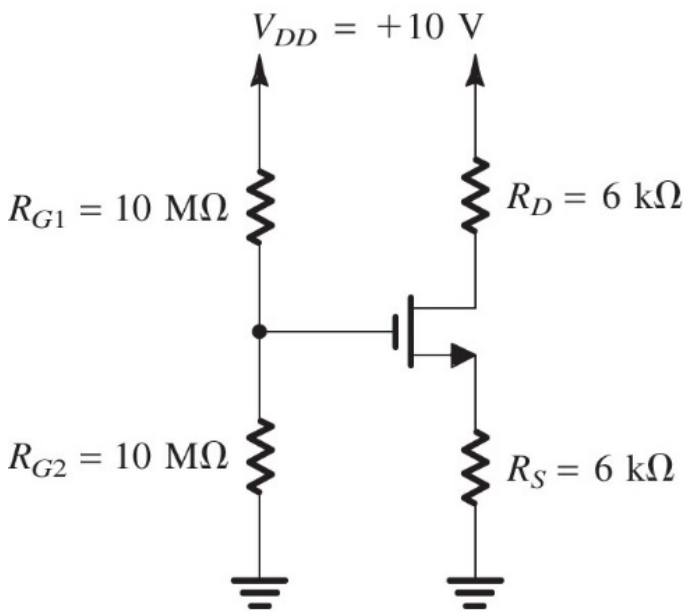

(a)

Example 5.7

Design circuit so that I_D = 0.5 mA and V_D = 3 V. You are given V_t = -1 V, $k_p'(W/L)$= 1 mA/V^2 and λ = 0 V^{-1}. What is the largest value of RD that will maintain saturation?

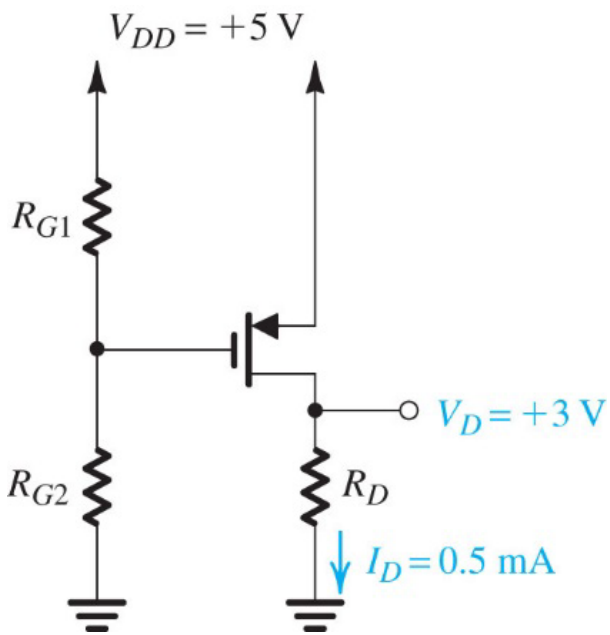

Example 5.8

The NMOS and PMOS devices are matched so that $V_{tn} = |V_{tp}| = 1$ V and $k_n = k_p = 1$ mA/V^2. You can assume $\lambda = 0$ V^{-1}. Find i_{DN}, i_{DP}, and v_O for $v_I = 0$V 2.5V and -2.5V.

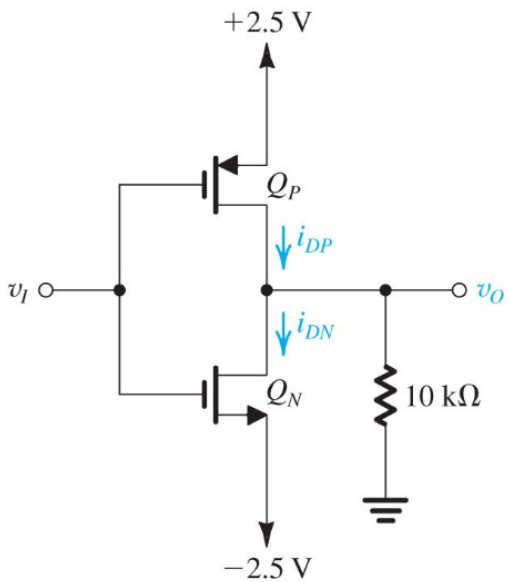

(a)

Example 5.8 (cont.)

D5.9 For the circuit in Fig. E5.9, find the value of R that results in $V_D = 0.7$ V. The MOSFET has $V_{tn} = 0.5$ V, $\mu_n C_{ox} = 0.4$ mA/V^2, $W/L = \frac{0.72\ \mu\text{m}}{0.18\ \mu\text{m}}$, and $\lambda = 0$.

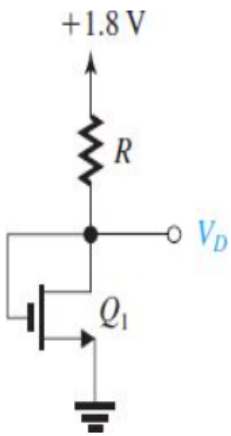

Figure E5.9

D5.10 Figure E5.10 shows a circuit obtained by augmenting the circuit of Fig. E5.9 with a transistor Q_2 identical to Q_1 and a resistance R_2. Find the value of R_2 that results in Q_2 operating at the edge of the saturation region. Use your solution to Exercise 5.9.

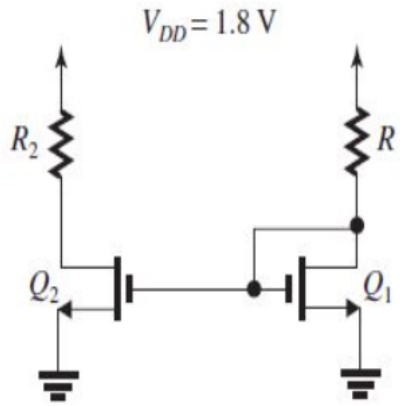

Figure E5.10