~~Do 5.10 (Hw1)~~

Email: "ECE 355" in subject

Unit #1
Chapter #5.3: MOSFET CIRCUITS at DC
Lecture 3

from **Microelectronic Circuits** Text
by Sedra and Smith
Oxford Publishing

Example 5.3

Design circuit so that I_D = 0.4 mA and V_D = 0.5 V. You are given V_t = 0.7 V, k_n'=100 μA/V², L = 1 μm, W = 32 μm, and λ = 0 V⁻¹.

$$I_D = \frac{V_{DD} - V_D}{R_D}$$

$$R_D = \frac{V_{DD} - V_D}{I_D}$$

$$= \frac{2.5 - 0.5}{0.4\,mA}$$

$$R_D = 5\,k\Omega$$

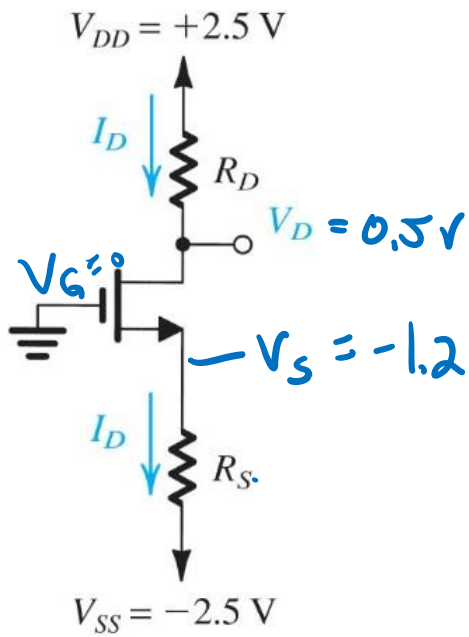

Operation Region

$$V_{GD} = 0 - 0.5V = -0.5 < V_t = 0.7V$$

$$V_{GD} \le V_t \rightarrow \text{saturation}$$

$$i_D = \frac{k_n'}{2}\left(\frac{W}{L}\right)V_{OV}^2$$

$$\rightarrow V_{OV} = \sqrt{\frac{2I_D}{k_n'\left(\frac{W}{L}\right)}} = \sqrt{\frac{2 \cdot 0.4\,mA}{100\,\frac{\mu A}{V^2}\left(\frac{32}{1}\right)}}$$

$$= 0.5V$$

$$V_{OV} = V_{GS} - V_t = \cancel{V_G}^{\,0} - V_S - V_t$$

$$V_S = -V_{OV} - V_t = -0.5 - 0.7$$

$$= -1.2V$$

$$3.25\,k\Omega = R_S = \frac{V_S - V_{SS}}{I_D} = \frac{-1.2 - (-2.5)}{0.4\,mA} = \frac{1.3V}{0.4\,mA} = 3.25\,k\Omega$$

Example 5.4

Neglect λ and express the i-v relationship for the diode connected transistor below in terms of k_n and V_t

$V_{GD} = 0$

saturation

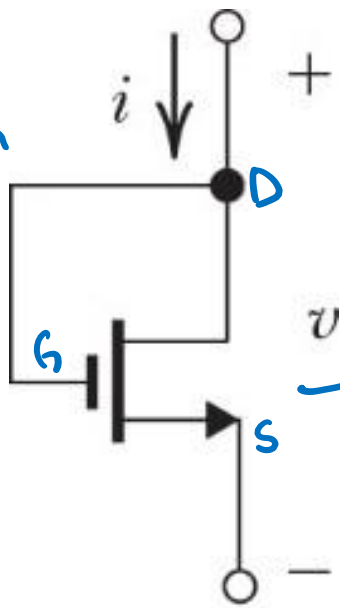

$i = I_D$

$v = V_{GS} = V_{DS}$

$$I_D = \frac{k_n}{2}(V_{GS} - V_t)^2$$

$$i = \frac{k_n}{2}(v - V_t)^2$$

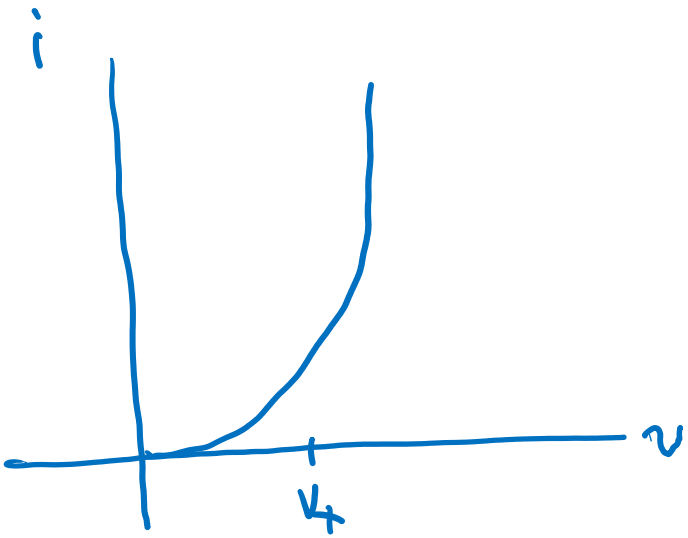

Example 5.5

Design circuit to get $V_D = 0.1$ V. You are given $V_t = 1$ V, $k_n = 1$ mA/V^2. What is the effective resistance between drain and source at the DC operating point? Why does λ not matter for this problem?

r_{DS}?

$V_{GD} = 5 - 0.1 = 4.9V > V_t = 1$

Triode

$I_D = K_n\left(V_{ov} - \frac{V_{DS}}{2}\right)V_{DS}$

$V_{ov} = V_{GS} - V_t = 5 - 1 = 4$

$I_D = 1\frac{mA}{V^2}\left(4 - \frac{0.1}{2}\right)0.1$

$= 0.395 mA$

$R_D = \frac{V_{DD} - V_D}{I_D}$

$R_D = \frac{4.9}{I_D}$

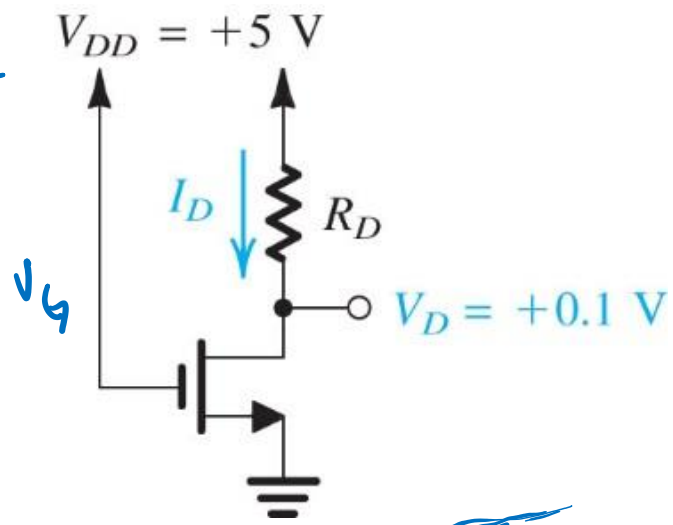

$R_D = \frac{4.9V}{0.395mA} = 12.4 k\Omega$

$r_{DS} = \frac{V_{DS}}{I_D} = \frac{0.1V}{0.395mA} = 253\Omega$

$r_{DS} = \frac{1}{K_n V_{ov}} = \frac{1}{1\frac{mA}{V^2}4} = 250\Omega$

Example 5.6

You are given $V_t = 1$ V, $k_n = 1$ mA/V^2, and $\lambda = 0$ V^{-1}. Analyze the circuit to determine all the node voltages and branch currents

$I = \frac{10V}{20M\Omega} = 0.5\mu A$

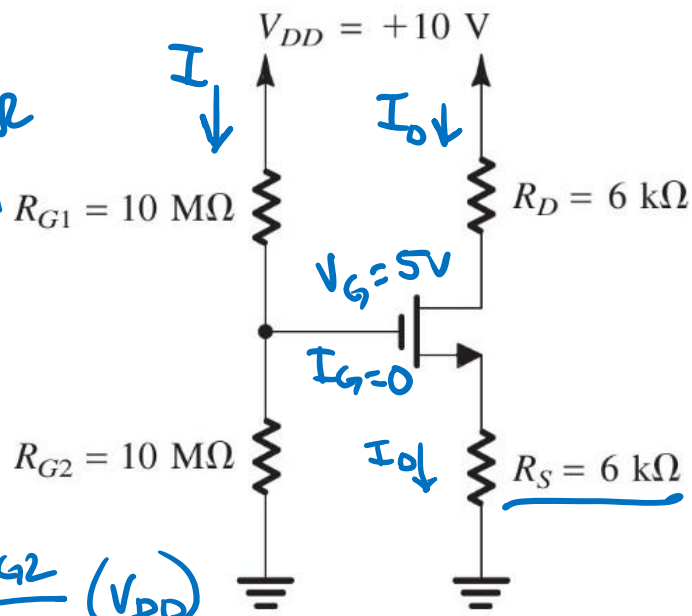

(a)

$V_G = \frac{R_{G2}}{R_{G1}+R_{G2}}(V_{DD})$

$V_G = \frac{10M\Omega}{20M\Omega}(10) = 5V$

Assume saturation

$V_{GS} = V_G - V_S \quad V_S = I_D R_S$

$I_D = \frac{k_n}{2}(V_{GS} - V_t)^2 = \frac{1}{2}(5 - I_D R_S - 1)^2$

$R_S = 6$

$2I_D = (4 - 6I_D)^2$

$2I_D = 16 - 48I_D + 36I_D^2$

$I_D = 8 - 24I_D + 18I_D^2$

$\underset{a}{18}I_D^2 - \underset{b}{25}I_D + \underset{c}{8} = 0$

$I_D = \frac{-b \pm \sqrt{b^2 - 4ac}}{2a}$

$I_D = \cancel{0.89\,mA}$ or $0.5\,mA$

$V_S = I_D R_S = 0.89m \cdot 6K = 5.34V$

$V_{GS} = 5 - 5.34V = -0.34V < V_t$

Example 5.6

You are given $V_t = 1$ V, $k_n = 1$ mA/V^2, and $\lambda = 0$ V^{-1}. Analyze the circuit to determine all the node voltages and branch currents

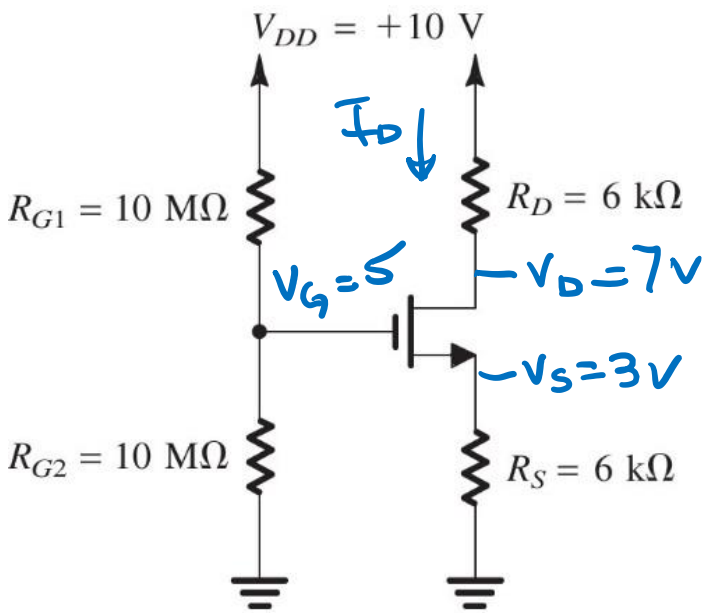

(a)

$I_D = 0.5$ mA

$V_S = I_D R_S = 0.5\text{mA} \cdot 6\text{k}\Omega = 3\text{V}$

$V_{GS} = 5 - 3 = 2\text{V} > V_t$

$V_D = V_{DD} - I_D R_D = 10 - \overbrace{0.5\text{m}6\text{k}}^{3}$

$V_D = 7$

$V_{DS} = 7 - 3\text{V} = 4\text{V}$

$V_{OV} = 2\text{V} - 1\text{V} = 1\text{V}$

$V_{DS} \geq V_{OV}$

$V_{GD} = 5 - 7 = -2 < V_t$

Yes, in saturation

Example 5.7

operates in saturation

Design circuit so that I_D = 0.5 mA and V_D = 3 V. You are given V_t = -1 V, $k_p'(W/L)$= 1 mA/V^2 and λ = 0 V^{-1}. What is the largest value of RD that will maintain saturation? $k_p = k_p'\left(\frac{W}{L}\right)$

Need V_{ov}

PMOS in Sat: $I_D = \frac{k_p}{2}|V_{ov}|^2$

$$|V_{ov}| = \sqrt{\frac{2 I_D}{k_p}} = \sqrt{\frac{2(0.5\,mA)}{1\,\frac{mA}{V^2}}} = 1V$$

$$|V_{ov}| = V_{SG} - |V_{tp}|$$

$$|V_{ov}| = V_S - V_G - |V_{tp}| = 1V$$

$$V_G = 5 - 1 - 1 = 3V$$

$$V_G = \frac{R_{G2}}{R_{G1}+R_{G2}}(V_{DD}) \rightarrow \frac{R_{G2}}{R_{G1}+R_{G2}} = \frac{3}{5}$$

$R_{G1} = 2M\Omega$ $R_{G2} = 3M\Omega$

$$R_D = \frac{3}{0.5m} = 6K$$

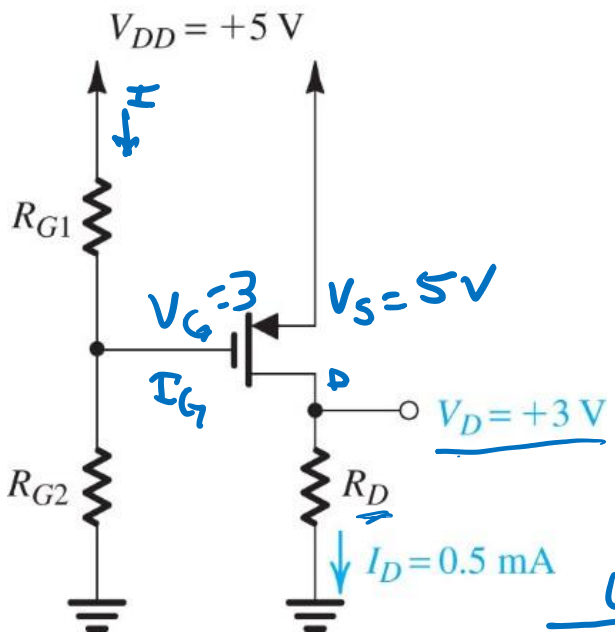

Largest RD

$V_{DG} \le |V_t| = 1$

$V_D - V_G = I_D R_D - 3V \le 1V$

$I_D R_D \le 4V$

$R_D \le \frac{4V}{0.5mA}$

$R_D \le 8K\Omega$

Example 5.8

The NMOS and PMOS devices are matched so that $V_{tn} = |V_{tp}| = 1$ V and $k_n = k_p = 1$ mA/V^2. You can assume $\lambda = 0$ V^{-1}. Find i_{DN}, i_{DP}, and v_O for $v_I = 0$V 2.5V and -2.5V.

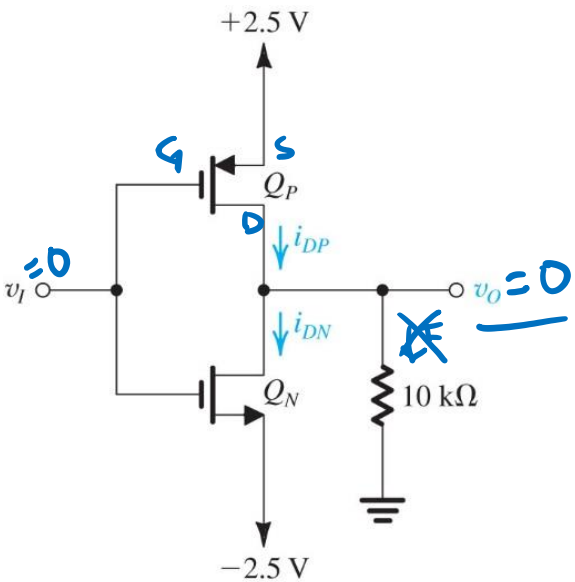

(a)

a) $V_I = 0$

Q_P: $V_{SG} = 2.5 - 0 = 2.5 > |V_{tp}|$

Q_N: $V_{GS} = 0 - (-2.5) = 2.5 > V_{tp}$

Both conducting

$V_{GSn} = V_{SGp} = 2.5$

$V_{GDn} = V_{DGp} = 0 < |V_t| \rightarrow$ saturation

$$i_{DP} = i_{DN} = \frac{1\,mA/V^2}{2}(2.5-1)^2$$

$$i_{DP} = i_{DN} = \frac{1\,mA/V^2}{2}(1.5V)^2 = 1.125\,mA$$

Example 5.8 (cont)

The NMOS and PMOS devices are matched so that $V_{tn} = |V_{tp}| = 1$ V and $k_n = k_p = 1$ mA/V^2. You can assume $\lambda = 0$ V^{-1}. Find i_{DN}, i_{DP}, and v_O for $v_I = 0$V 2.5V and -2.5V.

Q_P OFF Q_N ON

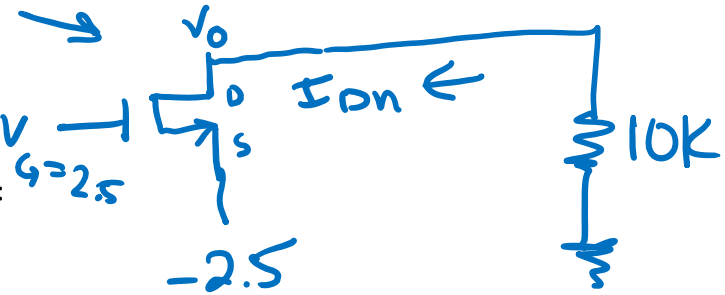

PMOS

$V_{SG} = 2.5 - 2.5 = 0$

NOT CONDUCTING

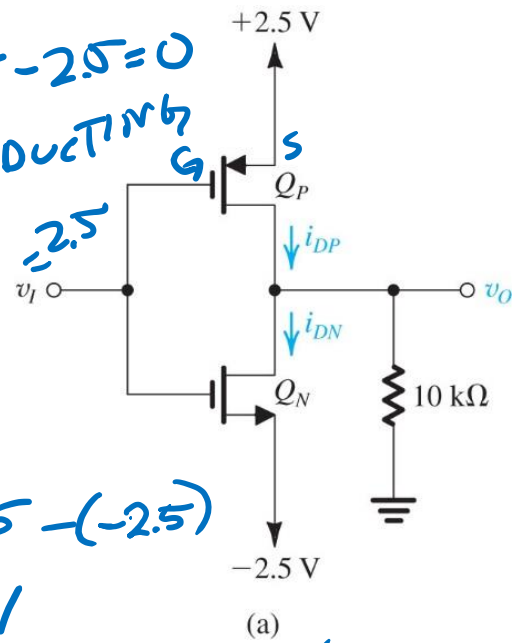

(a)

NMOS

$V_{GS} = 2.5 - (-2.5)$
$= 5V$

ON

$V_{GD} = 2.5 \underbrace{-(\text{neg})}_{\text{POS}} \geq V_t = 1$

$r_{DS} = \frac{1}{K_n V_{ov}} = \frac{1}{1mA/V^2 (4V)} = 250\Omega$

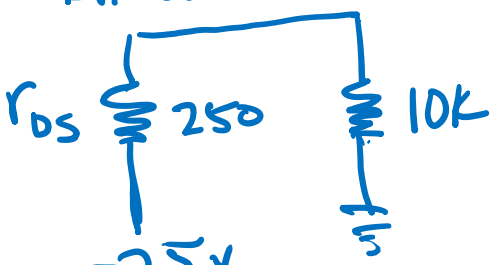

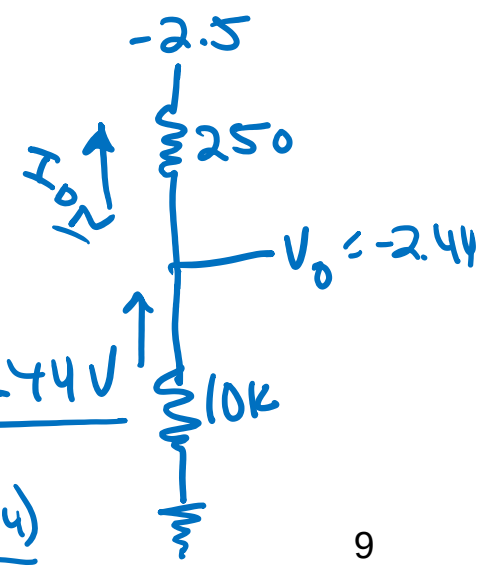

$V_O = (-2.5V)\frac{10K}{10.25K} = -2.44V$

$V_{DS} = -2.44V - (-2.5)$
$= 60mV << V_G$

$I_{DN} = \frac{0-(-2.44)}{10K} = 0.244mA$

Example 5.8 (cont)

The NMOS and PMOS devices are matched so that $V_{tn} = |V_{tp}| = 1$ V and $k_n = k_p = 1$ mA/V^2. You can assume $\lambda = 0$ V^{-1}. Find i_{DN}, i_{DP}, and v_O for $v_I = 0$V 2.5V and -2.5V.

PMOS ON

$v_I = -2.5$

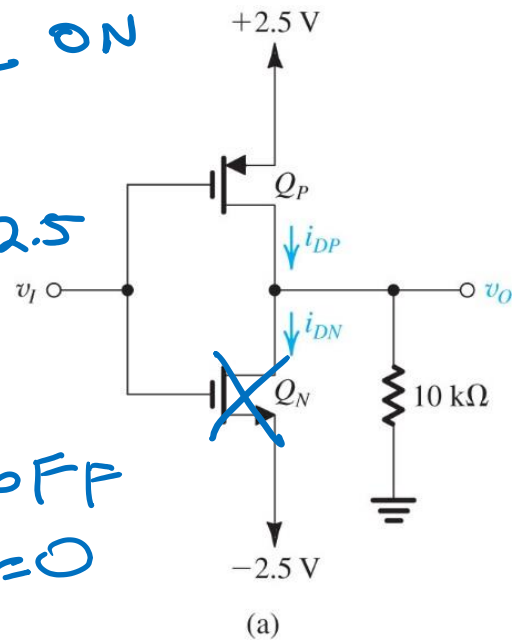

(a)

NMOS OFF

$i_{DN} = 0$

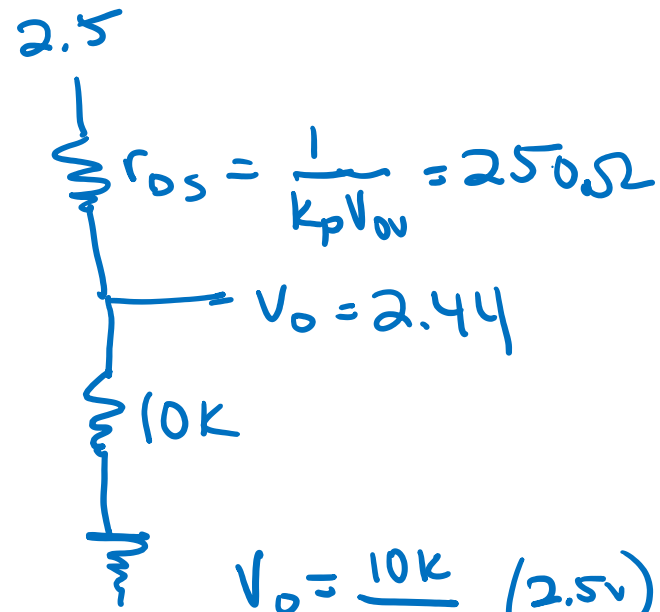

$$V_o = \frac{10K}{10.25K}(2.5v)$$

$$= +2.44$$

$$I_{DP} = \frac{2.5}{10.25} = 0.244 mA$$

D5.9 For the circuit in Fig. E5.9, find the value of R that results in $V_D = 0.7$ V. The MOSFET has $V_{tn} = 0.5$ V, $\mu_n C_{ox} = 0.4$ mA/V^2, $W/L = \frac{0.72\ \mu m}{0.18\ \mu m}$, and $\lambda = 0$.

K_n'

$$I_D = \frac{1}{2} K_n V_{OV}^2 \quad (1)$$

SUBSTITUTE INTO #1

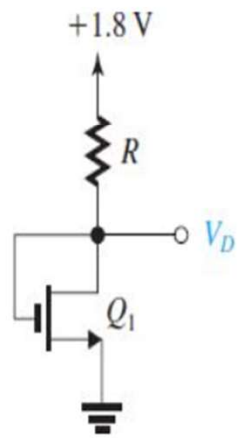

Figure E5.9

SATURATION

$V_{GS} - V_t = 0.2V$

$V_{DS} \geq 0.2V$

$V_{OV} = 0.2V$

$$I_D = \frac{1}{2} K_n' \left(\frac{W}{L}\right) V_{OV}^2 = \frac{1}{2}\left(0.4\frac{mA}{V^2}\right)\left(\frac{0.72}{0.18}\right)(0.2)^2$$

$$\boxed{I_D = 32\mu A}$$

$$R = \frac{(1.8 - 0.7)}{32\mu A} = \boxed{34.4\ k\Omega}$$

D5.10 Figure E5.10 shows a circuit obtained by augmenting the circuit of Fig. E5.9 with a transistor Q_2 identical to Q_1 and a resistance R_2. Find the value of R_2 that results in Q_2 operating at the edge of the saturation region. Use your solution to Exercise 5.9.

$\lambda = 0\,V^{-1}$

No CLM

$V_{DS} \geq V_{GS} - V_T$

$V_{DS} \geq 0.7 - 0.5$

$V_{DS} \geq 0.2V$

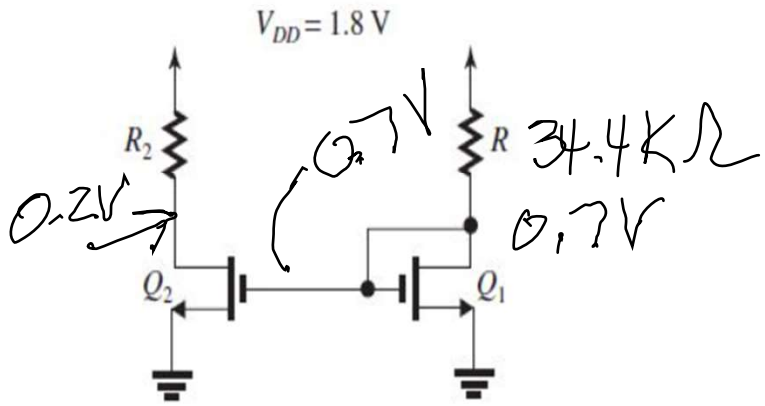

Figure E5.10

We choose $V_{DS} = 0.2V$ for largest R_2, edge of saturation $V = IR_2$

$$R_2 = \frac{(0.8 - 0.2)V}{(32\mu A)} = \boxed{50k\Omega}$$