Unit #5
Chapter #10.5.1:
High Frequency Response of CG Amplifier
Lecture 30

from **Microelectronic Circuits** Text
by Sedra and Smith
Oxford Publishing

8.4.1. **The Common Gate**

- **Recall the CG amplifier is used as a current buffer to increase the voltage gain of the basic CS gain cell (Unit 4 Lecture 22)**

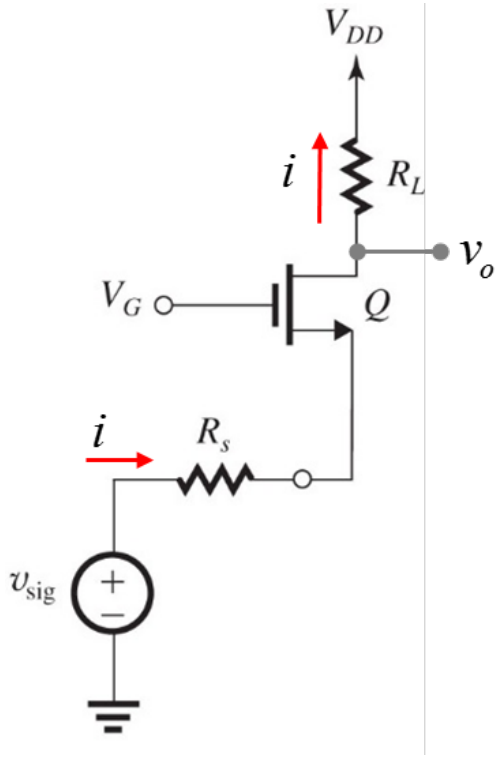

When used as a voltage amplifier, what is the overall midband voltage gain

$$G_{v\max} = \frac{v_o}{v_{sig}}$$

8.4.1. **Midband Gain**

- **When calculating midband gain, we omit the effects of capacitors impacting the frequency response and analyze the small signal model using either hybrid-π or T-model.**

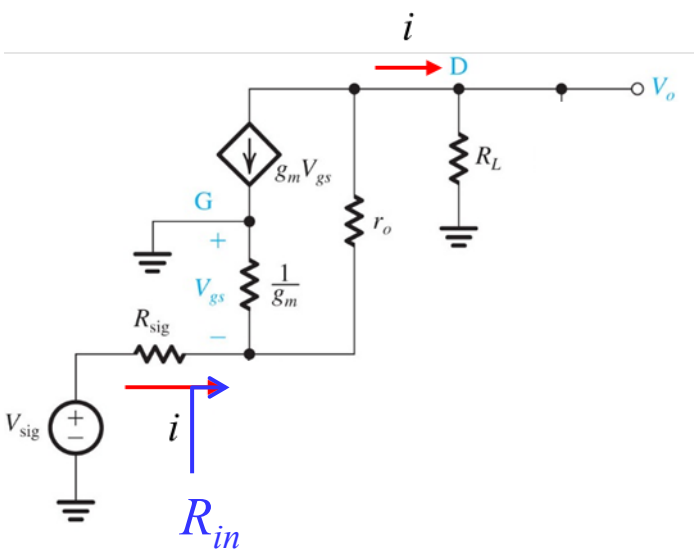

$$V_o = iR_L$$

$$V_{sig} = i\left(R_{sig} + R_{in}\right)$$

$$G_{v\max} = \frac{V_o}{V_{sig}} = \frac{R_L}{R_{sig} + R_{in}}$$

What is R_{in} (again)?

8.4.1. R_{in} for CG Amp

- **Find R_{in} as the ratio of input test voltage (v_x) and current (i_x)**

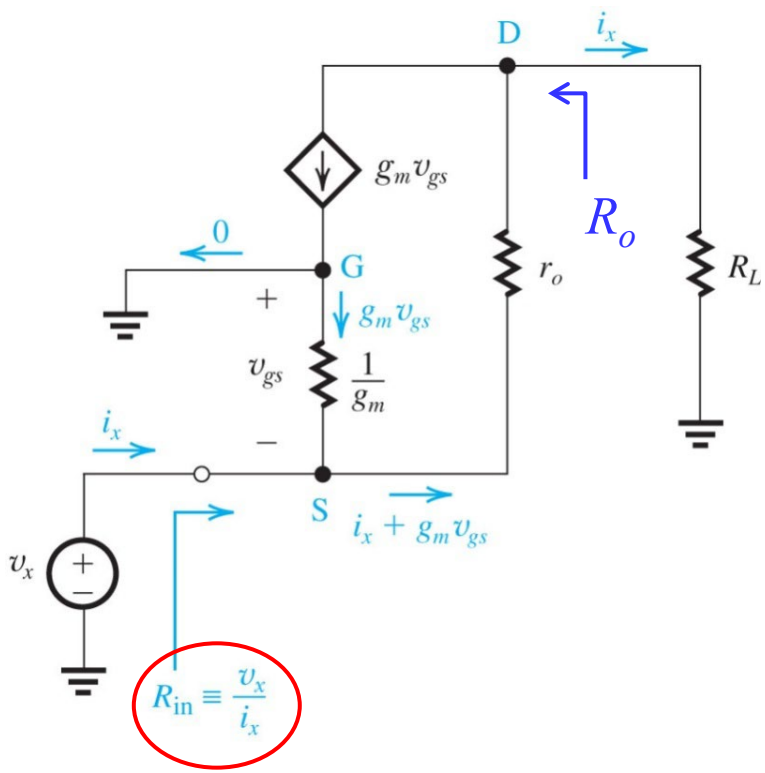

$$v_x = (i_x + g_m v_{gs}) r_o + i_x R_L$$

$$v_x = -v_{gs}$$

$$v_x (1 + g_m r_o) = i_x (r_o + R_L)$$

$$R_{in} = \frac{v_x}{i_x} = \frac{r_o + R_L}{1 + g_m r_o}$$

How about the R_o (again)?

8.4.1. R_o for CG Amp

- **Find R_o as the ratio of (another) input test voltage (v_x) and current (i_x)**

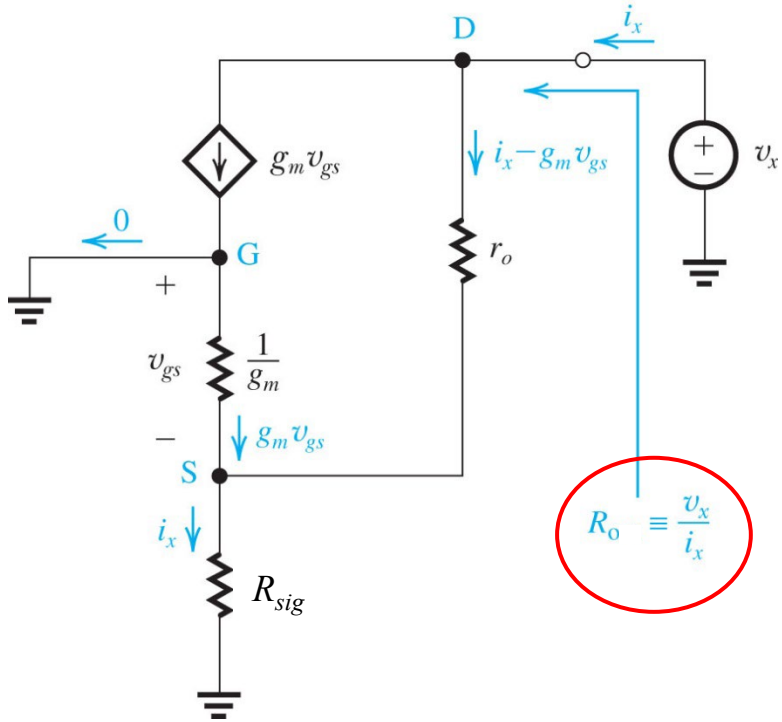

$$v_x = (i_x - g_m v_{gs}) r_o + i_x R_{sig}$$

$$v_{gs} = -i_x R_{sig}$$

$$v_x = i_x (r_o + R_{sig} + g_m r_o R_{sig})$$

$$R_o = \frac{v_x}{i_x} = r_o + R_{sig} + g_m r_o R_{sig}$$

10.5.1 **The Common Gate with Capacitors added**

- **With MOSCAP and load capacitors added, the circuit looks like**

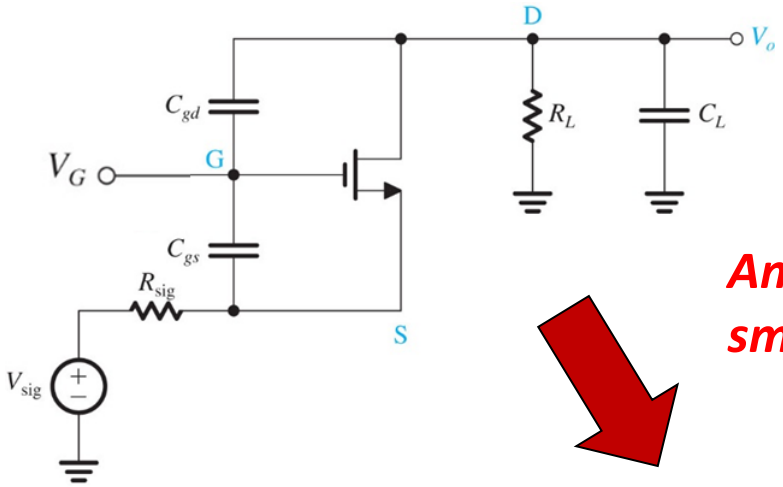

And looks like this in small signal (T model)

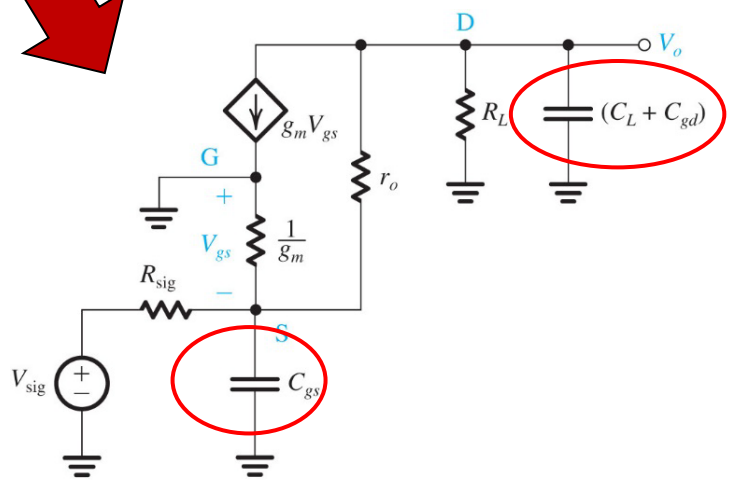

So we have <u>2</u> time constants associated with C_{gs} and (C_L+C_{gd})

10.5.1 **CG High Frequency Response**

- **Using the OCTC method, the first time constant, τ_1, is**

$$\tau_1 = C_{gs} R_1$$

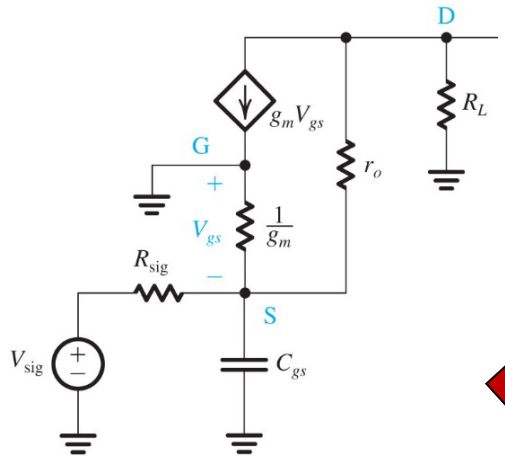

- **What is R_1 … the resistance 'seen' by C_{gs}.**

$$R_1 = R_{sig} \parallel R_{in}$$

$$\tau_1 = C_{gs}\left[R_{sig} \parallel \left(\frac{r_o + R_L}{1 + g_m r_o}\right)\right]$$

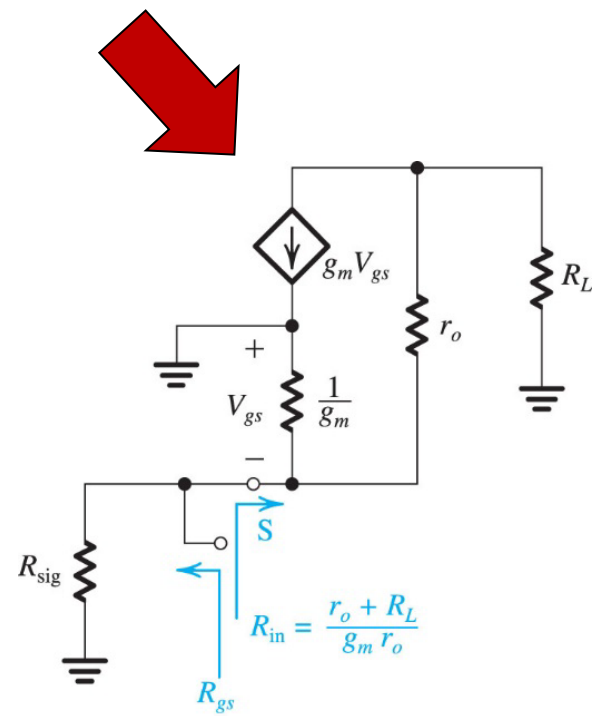

10.5.1 **CG High Frequency Response**

- **Using the OCTC method, the second time constant, τ_2, is**

$$\tau_2 = \left(C_{gd} + C_L\right)R_2$$

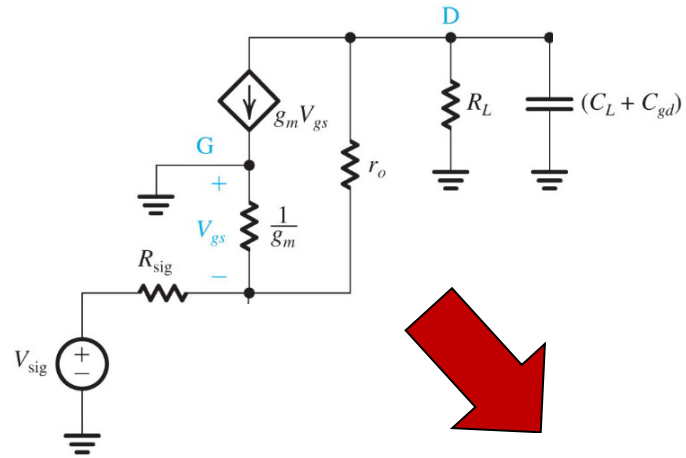

- **What is R_2 … the resistance 'seen' by $C_{gd} + C_L$**

$$R_2 = R_L \parallel R_o$$

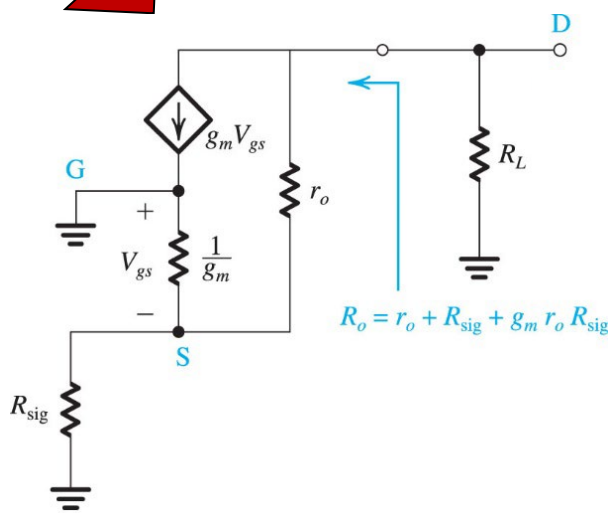

$$\tau_2 = \left(C_{gd} + C_L\right)\left[R_L \parallel \left(r_o + R_{sig} + g_m r_o R_{sig}\right)\right]$$

10.5.1 **CG High Frequency Response**

- **After obtaining the 2 time constants, we are able to estimate the high frequency gain magnitude of the CG amplifier as**

$$\left|G_v(s)\right| \approx G_{v\max}\left|F_H(s)\right| \approx G_{v\max}\left|\frac{1}{1+s/\omega_H}\right|$$

- **The 3-dB pole, ω_H, is then**

$$\omega_H \approx \frac{1}{\tau_1+\tau_2}$$

Note: typically, $\tau_2 >> \tau_1$,

so ω_2 will be the dominant pole

- **Let's look at example 10.6**