Unit #5
Chapter #10.5.1:
High Frequency Response of Source Follower (CD) Amplifier
Lecture 31

from **Microelectronic Circuits** Text

by Sedra and Smith

Oxford Publishing

7.3.6. **The Source Follower**

- **Recall the SF amplifier is used as a voltage buffer to increases input resistance and decreases output resistance of a voltage amplifier (Unit 4 Lecture 22)**

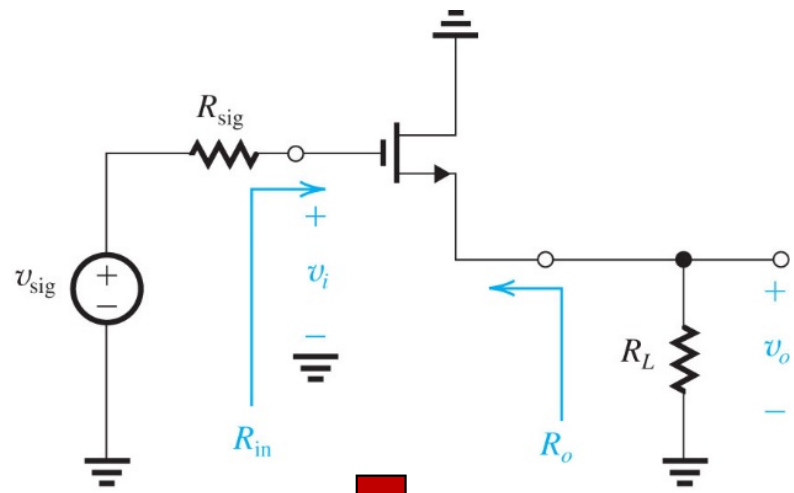

- **To get the midband gain, we once again eliminate the high frequency capacitors, and analyze the small signal model**

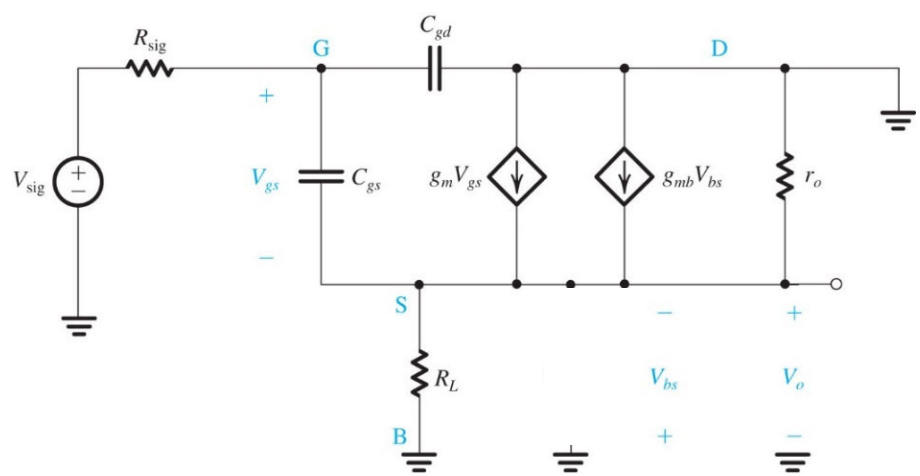

7.3.6. **Midband Gain**

- **This time we use the hybrid-π model (Lecture 22 used the T-model) and include r_o and the body-source transconductance, g_{mb}.**

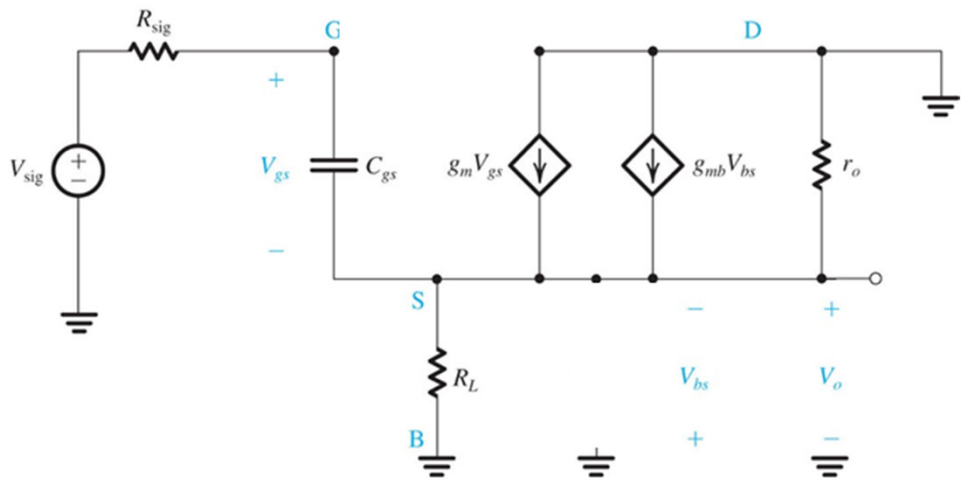

- **Just as a refresher recall**

$$g_m = k_n'\left(\frac{W}{L}\right)V_{OV} = \sqrt{k_n'\left(\frac{W}{L}\right)I_{DQ}}$$

$$r_o = \frac{V_A}{I_{DQ}} = \frac{1}{\lambda I_{DQ}}$$

I_{DQ} and V_{OV} are DC operating points

$$g_{mb} = \chi g_m$$

χ is a DC operating point parameter (see Lecture 18)

7.3.6. **Midband Gain (further simplifications)**

- **We see that R_L and r_o are in parallel and also in parallel to a resistor, $1/g_{mb}$**

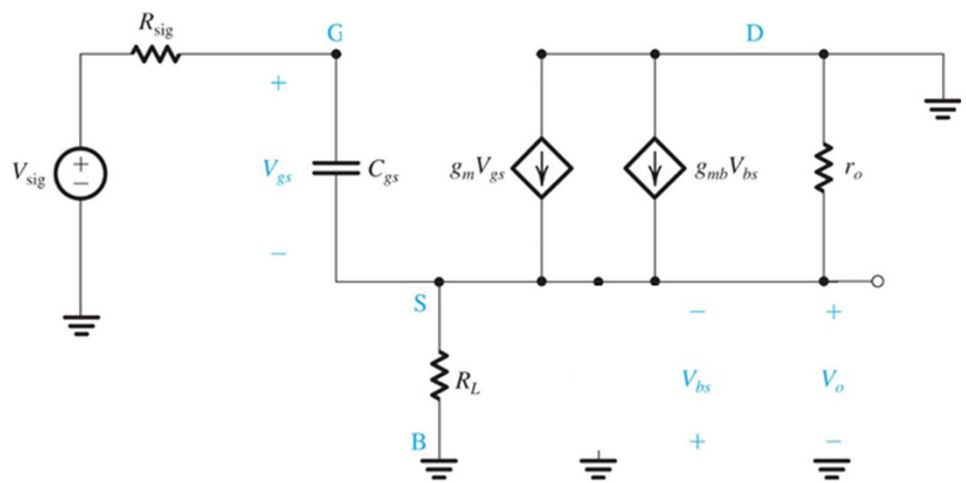

- **Note: $V_{bs} = V_{ds}$**

- **Recall … "Source Absorption"**

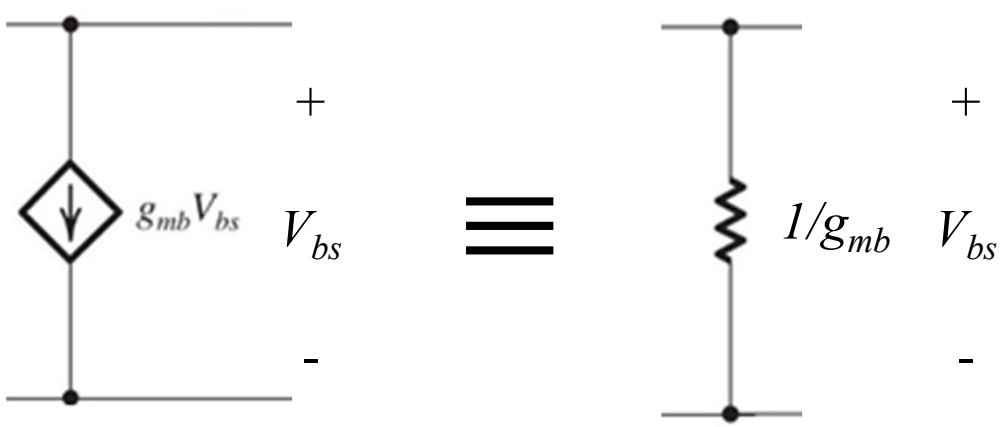

Since

$$R_{eq} = \frac{V_{bs}}{g_{mb} V_{bs}} = \frac{1}{g_{mb}}$$

7.3.6. **Source Follower (Mid-band Gain (further simplifications)**

- **The midband SF amp in small signal can now be simplified to**

$$R_L' = R_L \parallel r_o \parallel \frac{1}{g_{mb}}$$

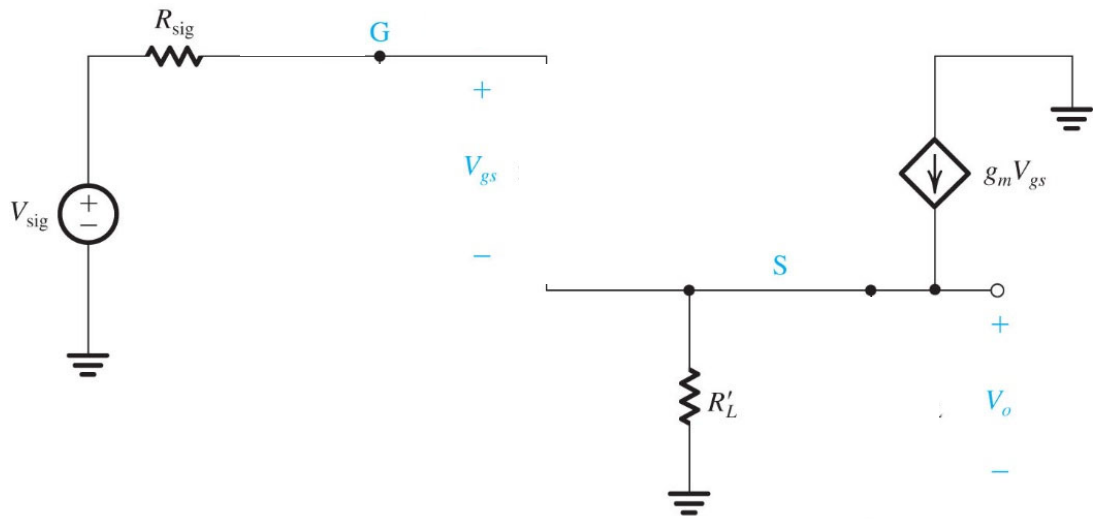

- **Now the midband gain, G_{vmax}, is readily obtained as**

$$G_{v\max} = \frac{V_o}{V_{sig}} = \frac{g_m V_{gs} R_L'}{V_{gs} + g_m V_{gs} R_L'}$$

$$G_{v\max} = \frac{g_m R_L'}{1 + g_m R_L'}$$

10.5.1. **The Source Follower with Capacitors added**

- **With MOSCAP and load capacitors added, the circuit small signal (hybrid-π model) looks like**

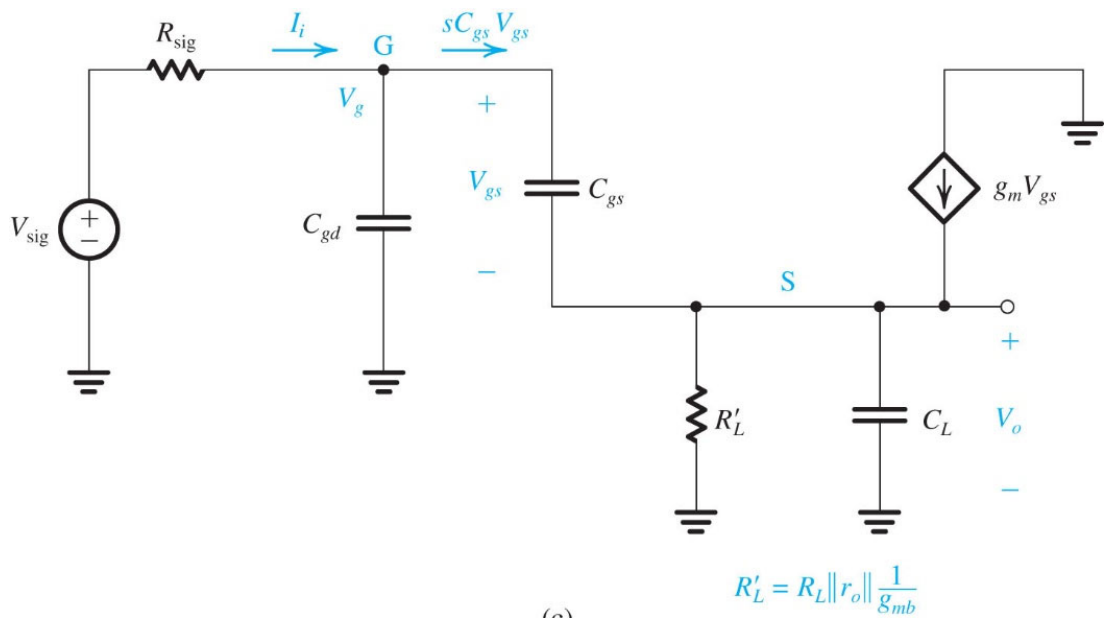

While you might be tempted to use the OCTC method here, for the SF, it cannot be generally applied … why?

….because the poles may be complex!

10.5.1. **Deriving the SF Amp Gain Transfer Function**

1. $V_{sig} = I_i R_{sig} + V_{gs} + V_o$

2. $I_i = sC_{gd}\overbrace{\left(V_{gs} + V_o\right)}^{V_G} + sC_{gs}V_{gs}$

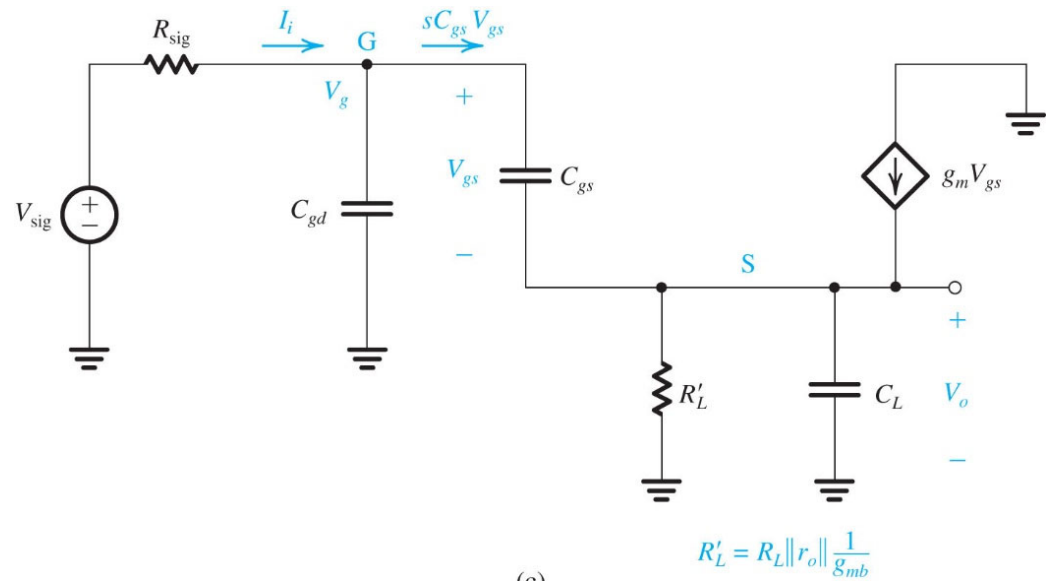

(Plug 2 into 1)

2b. $V_{sig} = sC_{gd}(V_{gs} + V_o)R_{sig} + sC_{gs}V_{gs}R_{sig} + V_{gs} + V_o$

3. $V_{sig} = \left[1 + s\left(C_{gs} + C_{gd}\right)R_{sig}\right]V_{gs} + \left(1 + sC_{gd}R_{sig}\right)V_o$

We want $\frac{Vo(s)}{Vsig(s)}$

Can we find V_{gs} in terms of V_{sig} OR V_o ?

10.5.1. **Deriving the SF Amp Gain Transfer Function**

- **At the source node (KCL)**

Flowing In Flowing Out

4. $$\left(g_m + sC_{gs}\right)V_{gs} = \left(\frac{1}{R_L'} + sC_L\right)V_o$$

5. $$V_{gs} = \frac{1}{\left(g_m + sC_{gs}\right)}\left(\frac{1}{R_L'} + sC_L\right)V_o$$

6. $$V_{gs} = \frac{1}{g_m R_L'}\frac{1 + sC_L R_L'}{1 + s\left(C_{gs}/g_m\right)}V_o$$

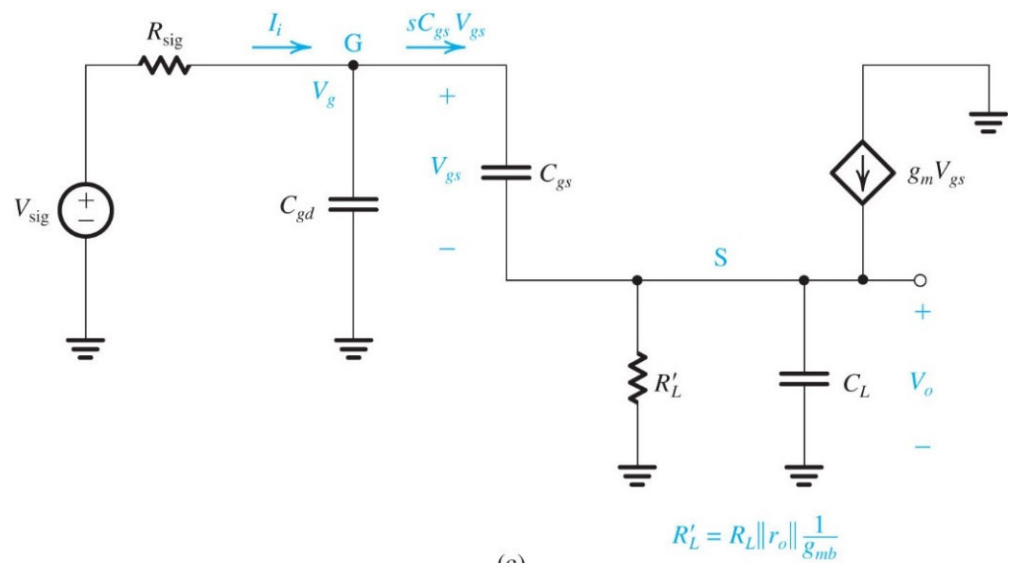

- **Combining (3) and (6) gives**

7. $$V_{sig} = \left\{\left[1 + s\left(C_{gs} + C_{gd}\right)R_{sig}\right]\left[\frac{1}{g_m R_L'}\frac{1 + sC_L R_L'}{1 + s\left(C_{gs}/g_m\right)}\right] + \left(1 + sC_{gd}R_{sig}\right)\right\}V_o$$

10.5.1. **Deriving the SF Amp Gain Transfer Function**

- **Rearranging (7) gives the gain transfer function**

8. $$\frac{V_o}{V_{sig}} = \frac{g_m R_L'\left[1 + s\left(C_{gs}/g_m\right)\right]}{1 + g_m R_L' + s\left[\left(C_{gs} + C_{gd}\right)R_{sig} + C_L R_L' + C_{gs} R_L' + g_m R_L' C_{gd} R_{sig}\right] + s^2\left[\left(C_{gs} + C_{gd}\right)C_L R_L' R_{sig} + C_{gs} C_{gd} R_{sig} R_L'\right]}$$

- **Taking out G_{vmax}**

So, we have 1 zero and 2 poles

9. $$\frac{V_o}{V_{sig}} = \frac{g_m R_L'}{1 + g_m R_L'} \frac{\left[1 + s\left(C_{gs}/g_m\right)\right]}{1 + s\left[\left(\frac{C_{gs}}{1 + g_m R_L'} + C_{gd}\right)R_{sig} + \left(\frac{C_L + C_{gs}}{1 + g_m R_L'}\right)R_L'\right] + s^2\left[\frac{\left(C_{gs} + C_{gd}\right)C_L + C_{gs} C_{gd}}{1 + g_m R_L'} R_{sig} R_L'\right]}$$

$$= G_{v\max} \frac{1 + \frac{s}{\omega_z}}{1 + b_1 s + b_2 s^2}$$

$$f_z = \frac{gm}{2\pi C_{gs}}$$

10.5.1. **Zero and Poles**

- **The zero is** $$\omega_z = \frac{g_m}{C_{gs}}$$

Slightly higher than the unity gain frequency of the ***MOSFET*** *(Lecture 24)*

$$\omega_T = \frac{g_m}{C_{gs} + C_{gd}}$$

- **For the two poles, ω_{p1} and ω_{p2}**

$$1 + b_1 s + b_2 s^2 = \left(1 + \frac{s}{\omega_{p1}}\right)\left(1 + \frac{s}{\omega_{p2}}\right)$$

So

$$b_1 = \frac{1}{\omega_{p1}} + \frac{1}{\omega_{p2}} \quad and \quad b_2 = \frac{1}{\omega_{p1}\omega_{p2}}$$

10.5.1. **Real Poles**

- **If the two poles are real you need to consider two cases**

1. **One pole is at least <u>four times larger</u> than the other**

Then

$$\frac{1}{\omega_{p1}} + \frac{1}{\omega_{p2}} >> \frac{1}{\omega_{p1}\omega_{p2}}$$

and

$$\omega_H = \frac{1}{b_1}$$

This would be the value obtained with the OCTC method

1. **The poles are less than <u>four times from</u> each other**

Then use the square root method

$$\omega_H \approx 1 \Big/ \sqrt{\frac{1}{\omega_{p1}^{\ 2}} + \frac{1}{\omega_{p2}^{\ 2}} - \frac{2}{\omega_z^{\ 2}}}$$

10.5.1. **Complex Poles**

- **If the two poles are complex, they are complex conjugates best described by their magnitude frequency ω_0 and Q- factor (Q > 0.5)**

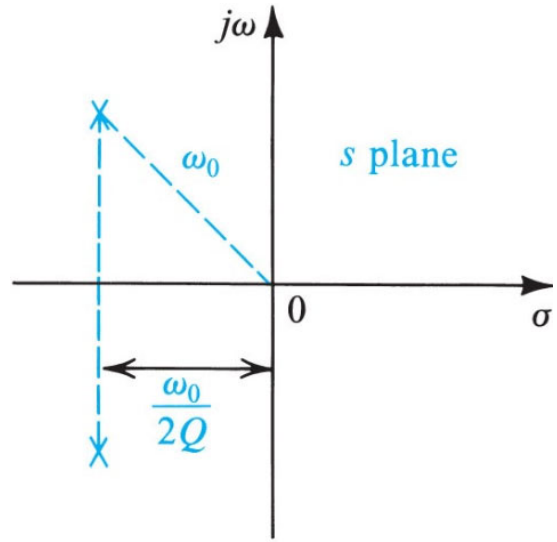

$$1 + b_1 s + b_2 s^2 = 1 + \frac{s}{Q\omega_0} + \frac{s^2}{\omega_0^{\ 2}}$$

$$\omega_0 = \sqrt{\frac{1 + g_m R_L'}{\left[\left(C_{gs} + C_{gd}\right)C_L + C_{gs}C_{gd}\right]R_{sig}R_L'}}$$

$$Q = \frac{1}{\left(\frac{C_{gs}}{1 + g_m R_L'} + C_{gd}\right)R_{sig} + \left(\frac{C_L + C_{gs}}{1 + g_m R_L'}\right)R_L}\frac{1}{\omega_0}$$

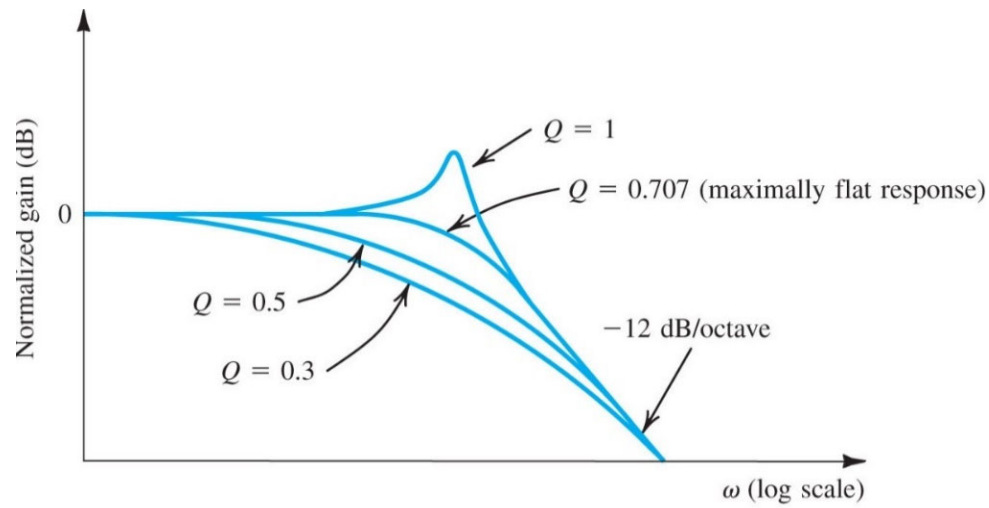

10.5.1. **Complex Poles**

- **If the two poles are complex, they are complex conjugates best described by their magnitude frequency ω_0 and Q- factor (Q > 0.5)**

$$1 + b_1 s + b_2 s^2 = 1 + \frac{s}{Q\omega_0} + \frac{s^2}{\omega_0^{\,2}}$$

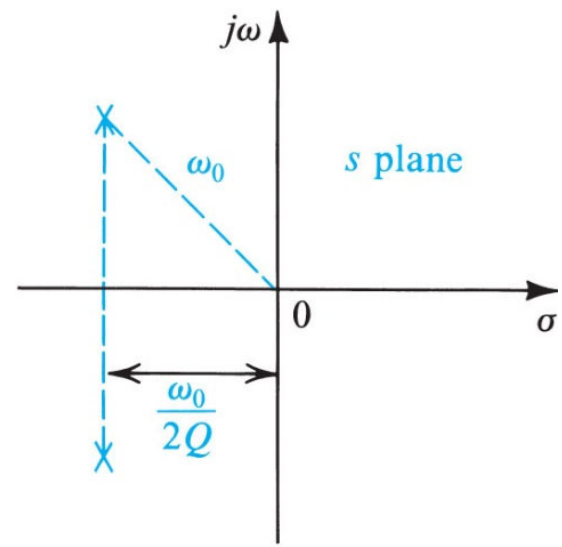

$$s^2 + \frac{s\,\omega_0^2}{Q\omega_0} + \omega_0^2 = 0$$

$$s^2 + \underbrace{s\,\frac{\omega_0}{Q}}_{2\zeta\omega_0} + \omega_0^2 = 0$$

From circuits 1 (202) EEE

$$2\zeta\omega_0 = \frac{\omega_0}{Q}$$

$$2\zeta = \frac{1}{Q} \qquad Q > 0.5$$

$$\boxed{\zeta = \frac{1}{2Q}} \qquad \zeta < 1.0$$

underdamped

Oxford University Publishing
Microelectronic Circuits by Adel S. Sedra and Kenneth C. Smith (0195323033)