Unit #6
Chapter #9.1: The MOS Differential Pair (1)
Lecture 32

from **Microelectronic Circuits** Text
by Sedra and Smith
Oxford Publishing

9.1 Introduction to the Differential Amplifier

- **A differential amplifier, which is the standard input sub-circuit for an operational amplifier, is an amplifier with two inputs and either**

- **One (single ended) output**

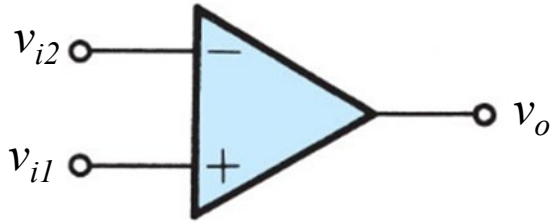

- **or two (differential) outputs**

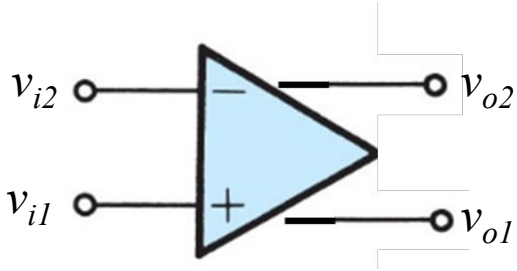

9.1 Introduction to the Differential Amplifier

- **The output is an amplified signal of the difference between the two inputs**

$$v_o = A_d\left(v_{i1} - v_{i2}\right)$$

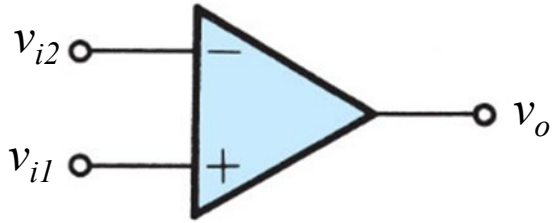

$$v_{o2} - v_{o1} = A_d\left(v_{i1} - v_{i2}\right)$$

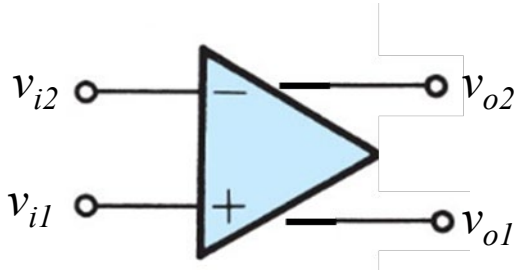

9.1 Advantages to the Differential Amplifier

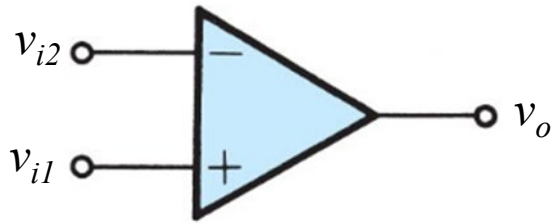

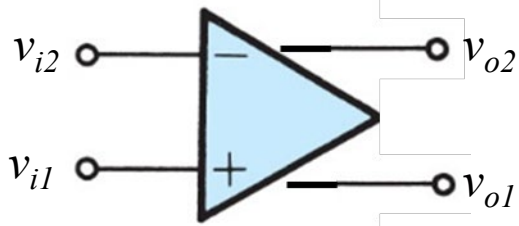

1. **Differential circuits are much less susceptible to noise and interference than single-ended input circuit like the ones we have seen so far**

2. **We can bias and couple amplifier stages together without using bypass of coupling capacitors, which typically degrade the low frequency behavior**

9.1 The MOS Differential Pair

- **The basic structure of the differential amplifier is the differential pair (of MOS transistors)**

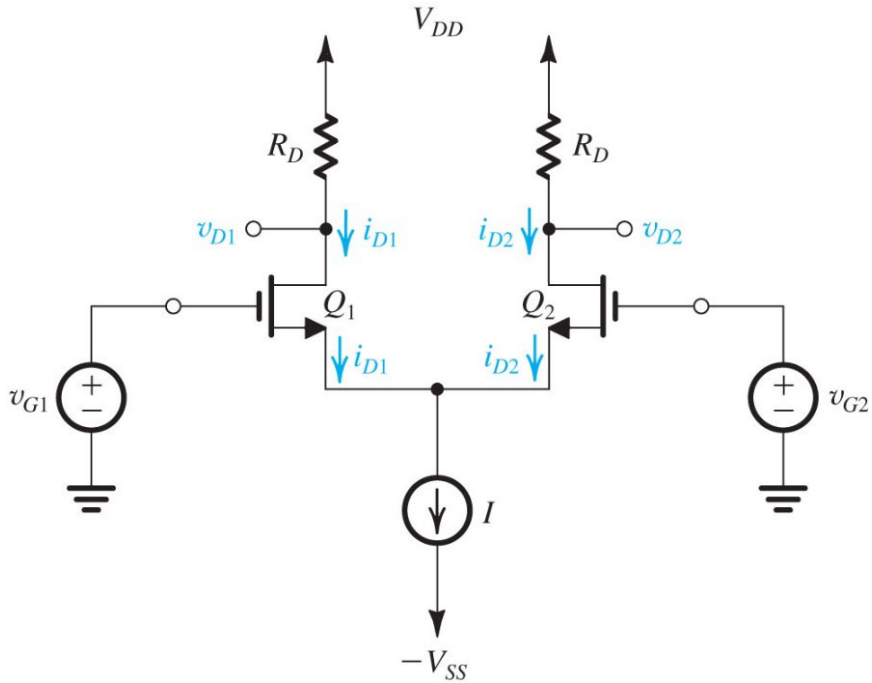

- **Here we have**

$$v_{i1} = v_{G1} \text{ and } v_{i2} = v_{G2}$$

$$v_{o1} = v_{D1} \text{ and } v_{o2} = v_{D2}$$

In order to operate correctly the transistors <u>must</u> be in saturation

9.1 The MOS Differential Pair

- **The <u>sources</u> of the transistors are tied together and biased with the tail current source, I.**

- **The drains are tied to V_{DD} through load transistors, R_D, (typically equal)**

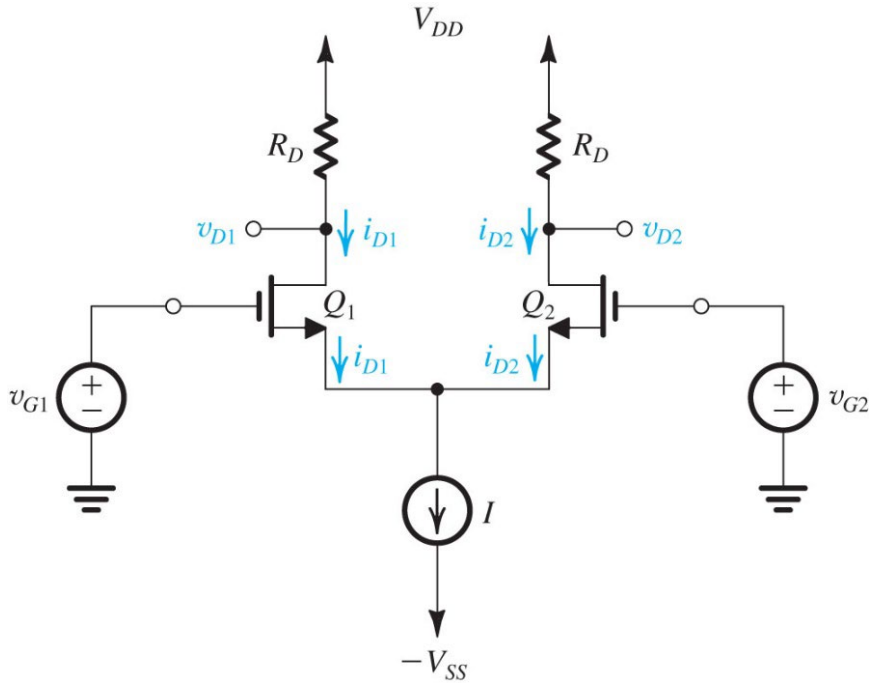

Note at low midband frequencies:

$$i_{D1} + i_{D2} = I$$

9.1.1 Operation with a common-mode input voltage

- **If $v_{G1} = v_{G2} = V_{CM}$ (a common mode voltage)**

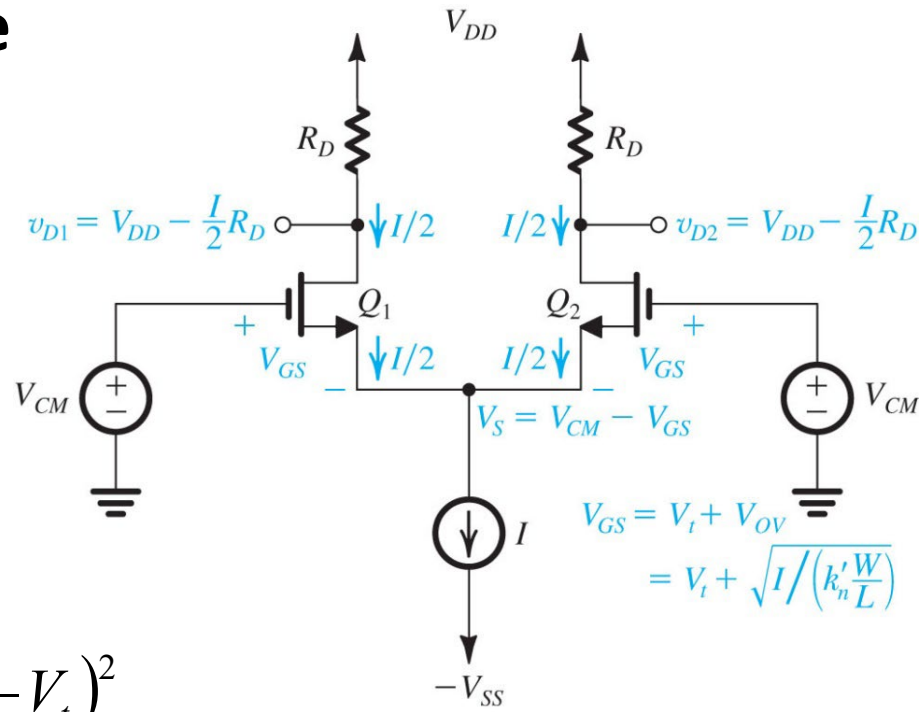

$$V_{GS} = V_{CM} - V_S$$

so

$$i_{D1} = i_{D2} = \frac{I}{2} = \frac{1}{2}k_n'\frac{W}{L}\underbrace{(V_{GS} - V_t)}_{V_{OV}}{}^2$$

$$\therefore \quad V_{OV} = \sqrt{I/k_n'(W/L)}$$

9.1.1 Operation with a common-mode input voltage

- **For a common mode input the drain voltages are equal**

$$v_{D1} = v_{D2} = V_{DD} - \frac{I}{2} R_D$$

- **So the differential output voltage is ideally**

$$v_{o2} - v_{o1} = v_{D2} - v_{D1} = 0V$$

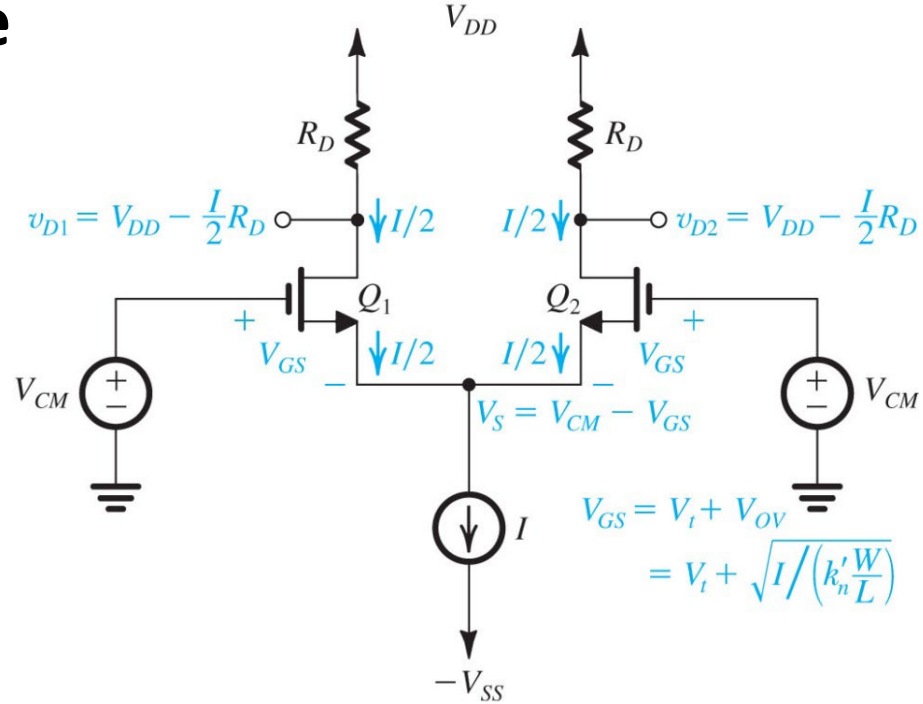

Ideally the differential pair output "rejects" the common mode input

9.1.1 Input common-mode range

- **In order for the transistors to be in saturation**

$$V_{DS} \geq V_{GS} - V_t$$

or

$$V_D \geq V_{CM} - V_t$$

$$V_D - V_S \geq V_G - V_S - Vt$$

$$V_D \geq V_G - Vt$$

$$V_D \geq V_{CM} - Vt$$

$$V_D + Vt \geq V_{CMMax}$$

$$V_D = V_{DD} - \frac{I}{2} R_D$$

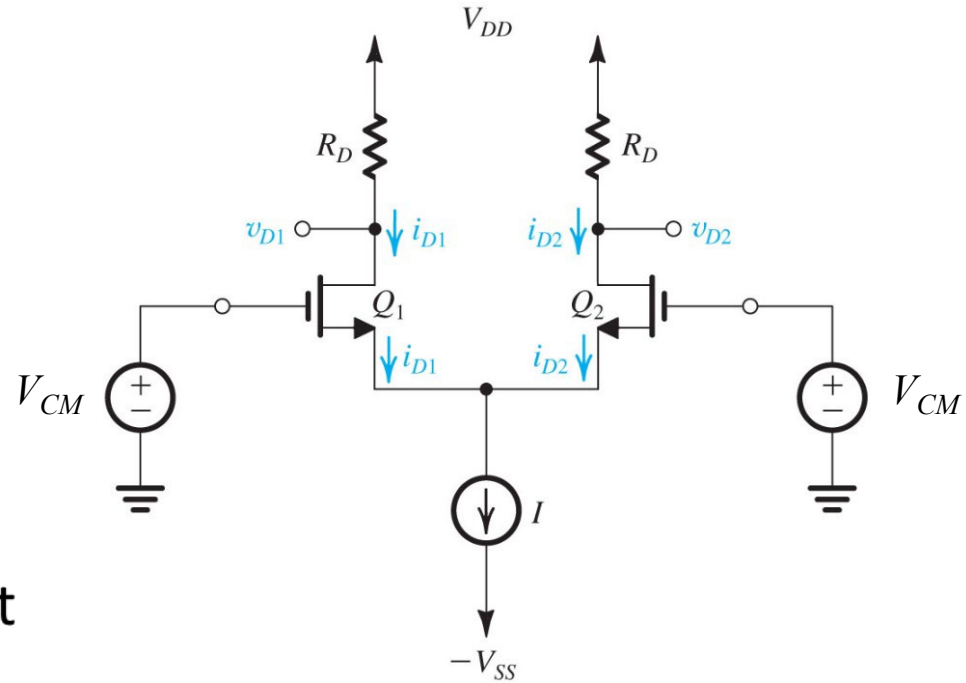

$$V_{CM\max} = V_{DD} - \frac{I}{2} R_D + V_t$$

9.1.1 Input common-mode range

- **Minimum value of V_{CM} is function of minimum required voltage, V_{CS}, across current source**

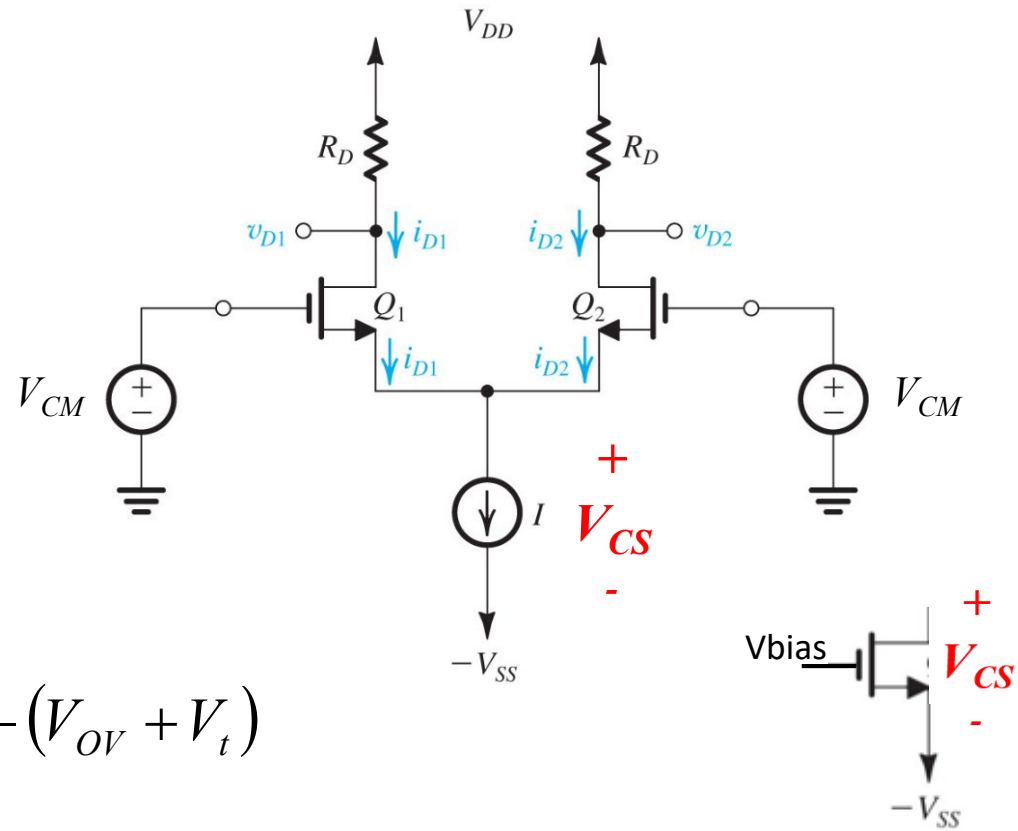

$$V_S \geq -V_{SS} + V_{CS}$$

and

$$V_S = V_{CM} - V_{GS} = V_{CM} - (V_{OV} + V_t)$$

V_{CM} - (Vov + Vt) ≥ -V_{ss} + V_{CS}

V_{CM} ≥ -V_{ss} + V_{CS} + (Vov + Vt)

$$V_{CM\min} = -V_{SS} + V_{CS} + V_{OV} + V_t$$